STUDER D820 MCH

Diagrams / Spare Parts

Prepared and edited by STUDER INTERNATIONAL TECHNICAL DOCUMENTATION
Althardstrasse 10, CH-8105 Regensdorf-Zürich, Switzerland

Printed in Switzerland
Order No.: 10.27.1730 (Ed. 09.91)

Contents of Diagram Sections in Numerical Order

ESE = Electrostatically sensitive assembly

BLOCKDIAGRAM AUDIO SIGNAL PROCESSING

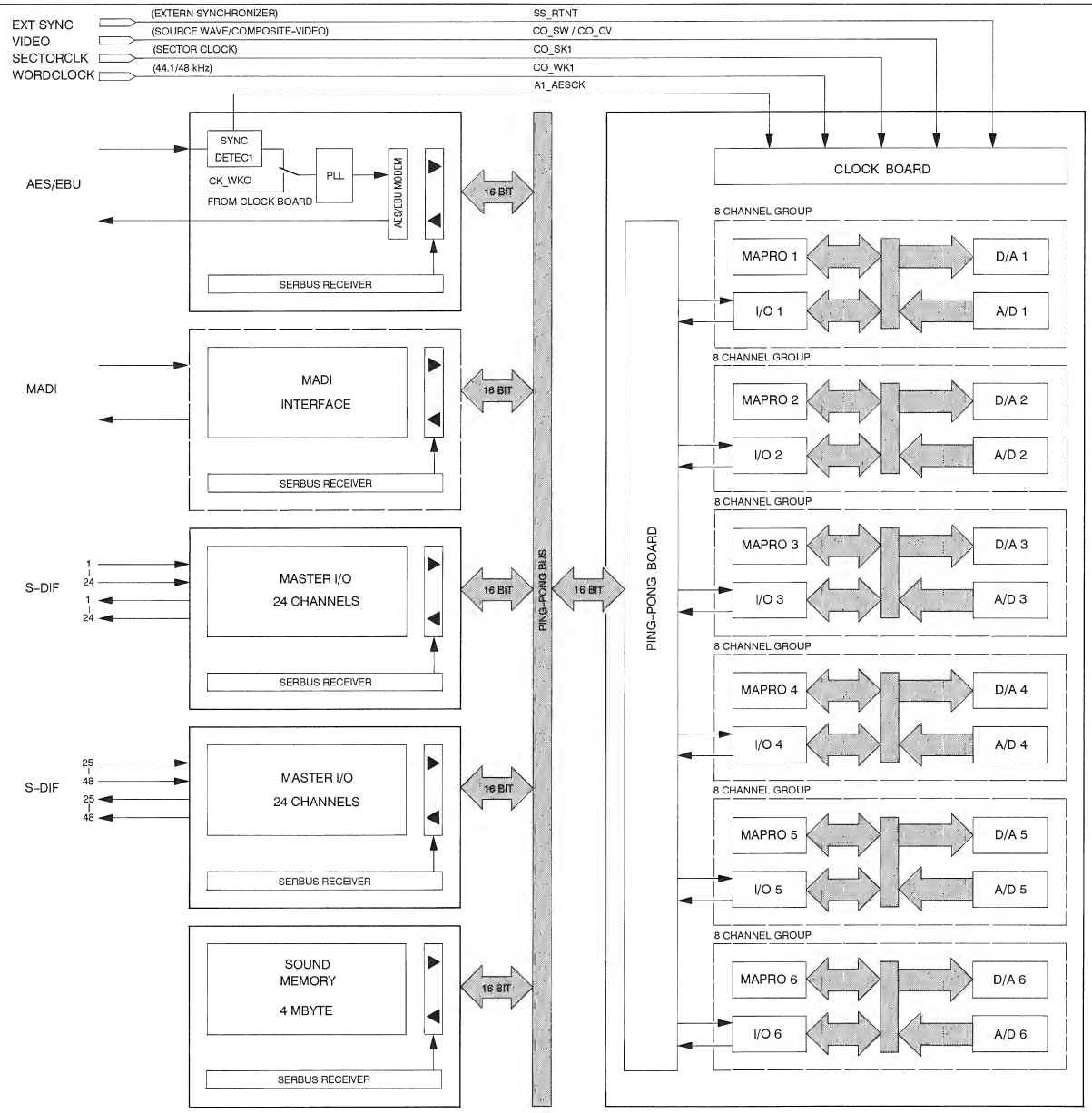

BACKPANEL AA1 1.862.609.00

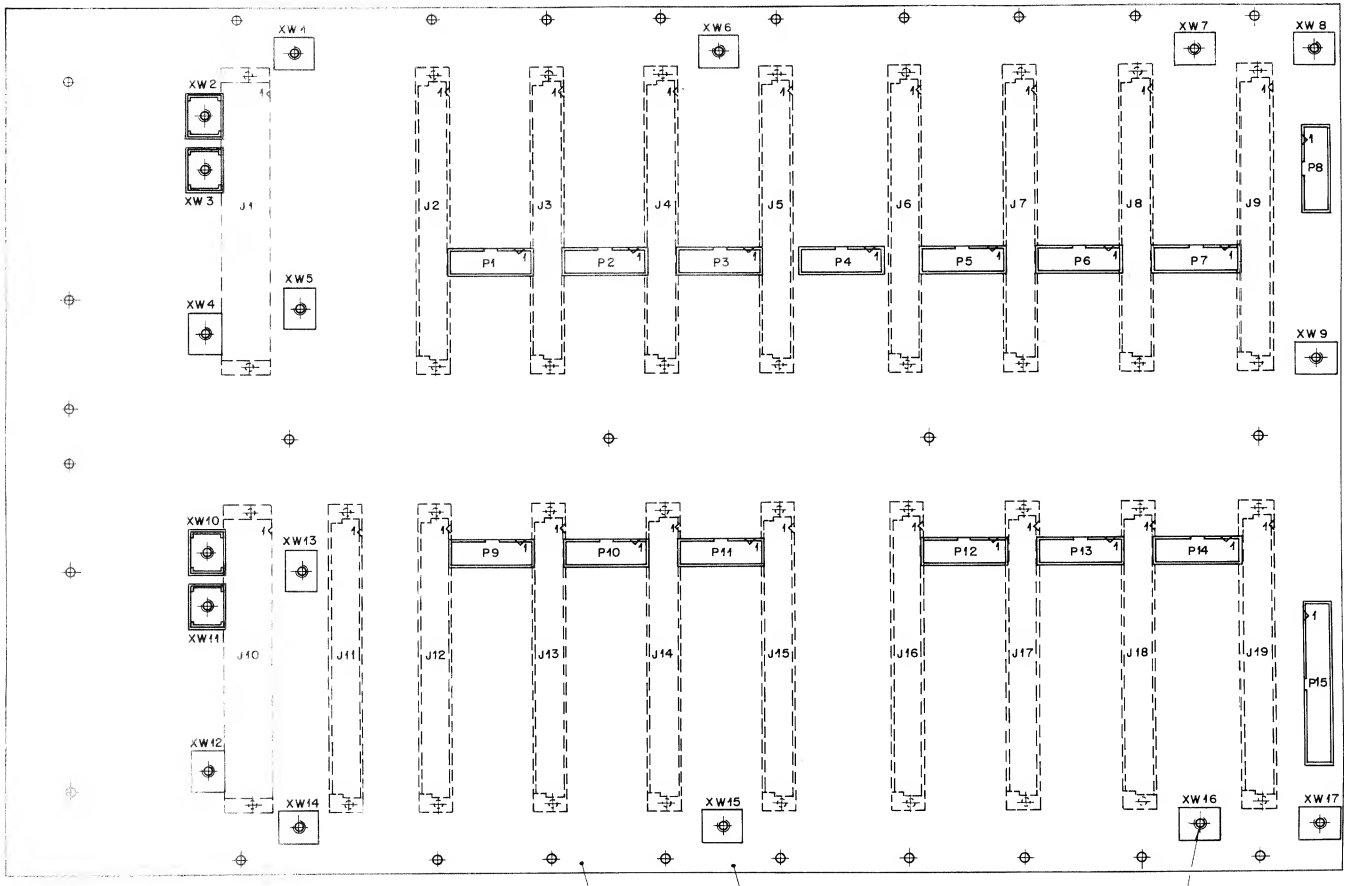

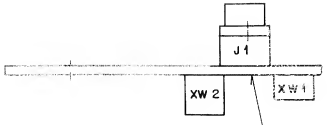

Bestückungsdruck

Nr. Etikette MP 2
aufgeklebt nach Fabrikationsmuster.

IND.	POS.NO.	PART NO.	VALUE	SPECIFICATIONS / EQUIVALENT	MANUF.
	J..0001	54.11.2012		EURO 3 * 16, TYP F, PRINT	AMP
	J..0002	54.11.2011		EURO 3 * 32, TYP C, PRINT	AMP
	J..0003	54.11.2011		EURO 3 * 32, TYP C, PRINT	AMP
	J..0004	54.11.2011		EURO 3 * 32, TYP C, PRINT	AMP
	J..0005	54.11.2011		EURO 3 * 32, TYP C, PRINT	AMP
	J..0006	54.11.2011		EURO 3 * 32, TYP C, PRINT	AMP
	J..0007	54.11.2011		EURO 3 * 32, TYP C, PRINT	AMP
	J..0008	54.11.2011		EURO 3 * 32, TYP C, PRINT	AMP
	J..0009	54.11.2011		EURO 3 * 32, TYP C, PRINT	AMP
	J..0010	54.11.2012		EURO 3 * 16, TYP F, PRINT	AMP
	J..0011	54.11.2011		EURO 3 * 32, TYP C, PRINT	AMP
	J..0012	54.11.2011		EURO 3 * 32, TYP C, PRINT	AMP
	J..0013	54.11.2011		EURO 3 * 32, TYP C, PRINT	AMP
	J..0014	54.11.2011		EURO 3 * 32, TYP C, PRINT	AMP
	J..0015	54.11.2011		EURO 3 * 32, TYP C, PRINT	AMP
	J..0016	54.11.2011		EURO 3 * 32, TYP C, PRINT	AMP
	J..0017	54.11.2011		EURO 3 * 32, TYP C, PRINT	AMP
	J..0018	54.11.2011		EURO 3 * 32, TYP C, PRINT	AMP
	J..0019	54.11.2011		EURO 3 * 32, TYP C, PRINT	AMP
	MP.0001	1.862.609.11		BACKPANEL "AA1" PCB (4 LAYERS)	ST
	MP.0002	1.862.609.01		ETIK. PRINT.NR.	ST
	P..0001	54.14.4016		STECKER 16 P, AU, PRINT	AMP
	P..0002	54.14.4016		STECKER 16 P, AU, PRINT	AMP
	P..0003	54.14.4016		STECKER 16 P, AU, PRINT	AMP
	P..0004	54.14.4016		STECKER 16 P, AU, PRINT	AMP
	P..0005	54.14.4016		STECKER 16 P, AU, PRINT	AMP
	P..0006	54.14.4016		STECKER 16 P, AU, PRINT	AMP
	P..0007	54.14.4016		STECKER 16 P, AU, PRINT	AMP
	P..0008	54.14.4016		STECKER 16 P, AU, PRINT	AMP
	P..0009	54.14.4016		STECKER 16 P, AU, PRINT	AMP
	P..0010	54.14.4016		STECKER 16 P, AU, PRINT	AMP
	P..0011	54.14.4016		STECKER 16 P, AU, PRINT	AMP
	P..0012	54.14.4016		STECKER 16 P, AU, PRINT	AMP
	P..0013	54.14.4016		STECKER 16 P, AU, PRINT	AMP
	P..0014	54.14.4016		STECKER 16 P, AU, PRINT	AMP

S T U D E R (00) 89/08/21 LAR BACKPANEL AA1 PL 1.862.609.00 PAGE 1

IND.	POS.NO.	PART NO.	VALUE	SPECIFICATIONS / EQUIVALENT	MANUF.
	P..0015	54.14.4034		STECKER 34 P, AU, PRINT	AMP
	XW.0001	53.05.0147		POWER TERMINAL OPEN, ACTION PIN	AMP
	XW.0002	53.05.0148		POWER TERMINAL WITH LID, ACTION PIN	AMP
	XW.0003	53.05.0148		POWER TERMINAL WITH LID, ACTION PIN	AMP
	XW.0004	53.05.0147		POWER TERMINAL OPEN, ACTION PIN	AMP
	XW.0005	53.05.0147		POWER TERMINAL OPEN, ACTION PIN	AMP
	XW.0006	53.05.0147		POWER TERMINAL OPEN, ACTION PIN	AMP
	XW.0007	53.05.0147		POWER TERMINAL OPEN, ACTION PIN	AMP
	XW.0008	53.05.0147		POWER TERMINAL OPEN, ACTION PIN	AMP
	XW.0009	53.05.0147		POWER TERMINAL OPEN, ACTION PIN	AMP
	XW.0010	53.05.0148		POWER TERMINAL WITH LID, ACTION PIN	AMP
	XW.0011	53.05.0148		POWER TERMINAL WITH LID, ACTION PIN	AMP
	XW.0012	53.05.0147		POWER TERMINAL OPEN, ACTION PIN	AMP
	XW.0013	53.05.0147		POWER TERMINAL OPEN, ACTION PIN	AMP
	XW.0014	53.05.0147		POWER TERMINAL OPEN, ACTION PIN	AMP
	XW.0015	53.05.0147		POWER TERMINAL OPEN, ACTION PIN	AMP
	XW.0016	53.05.0147		POWER TERMINAL OPEN, ACTION PIN	AMP
	XW.0017	53.05.0147		POWER TERMINAL OPEN, ACTION PIN	AMP

REMARKS:

```
****************************************
* 4-LAYER PRINT MIT BESTUECKUNGSDRUCK *
****************************************
```

MANUFACTURERS:
St = STUDER, Ph = PHILIPS, BB = BURR BROWN, Ha = HARRIS

ABBREVIATIONS:
CER = CERAMIC / FILM = FILM TYPE / XF = CLAMP FOR FUSES /
XIC = IC SOCKET / XW = POWER TERMINAL

ORIG 89/08/21

S T U D E R (00) 89/08/21 LAR BACKPANEL AA1 PL 1.862.609.00 PAGE 2

BACKPANEL AA2 1.862.610.00

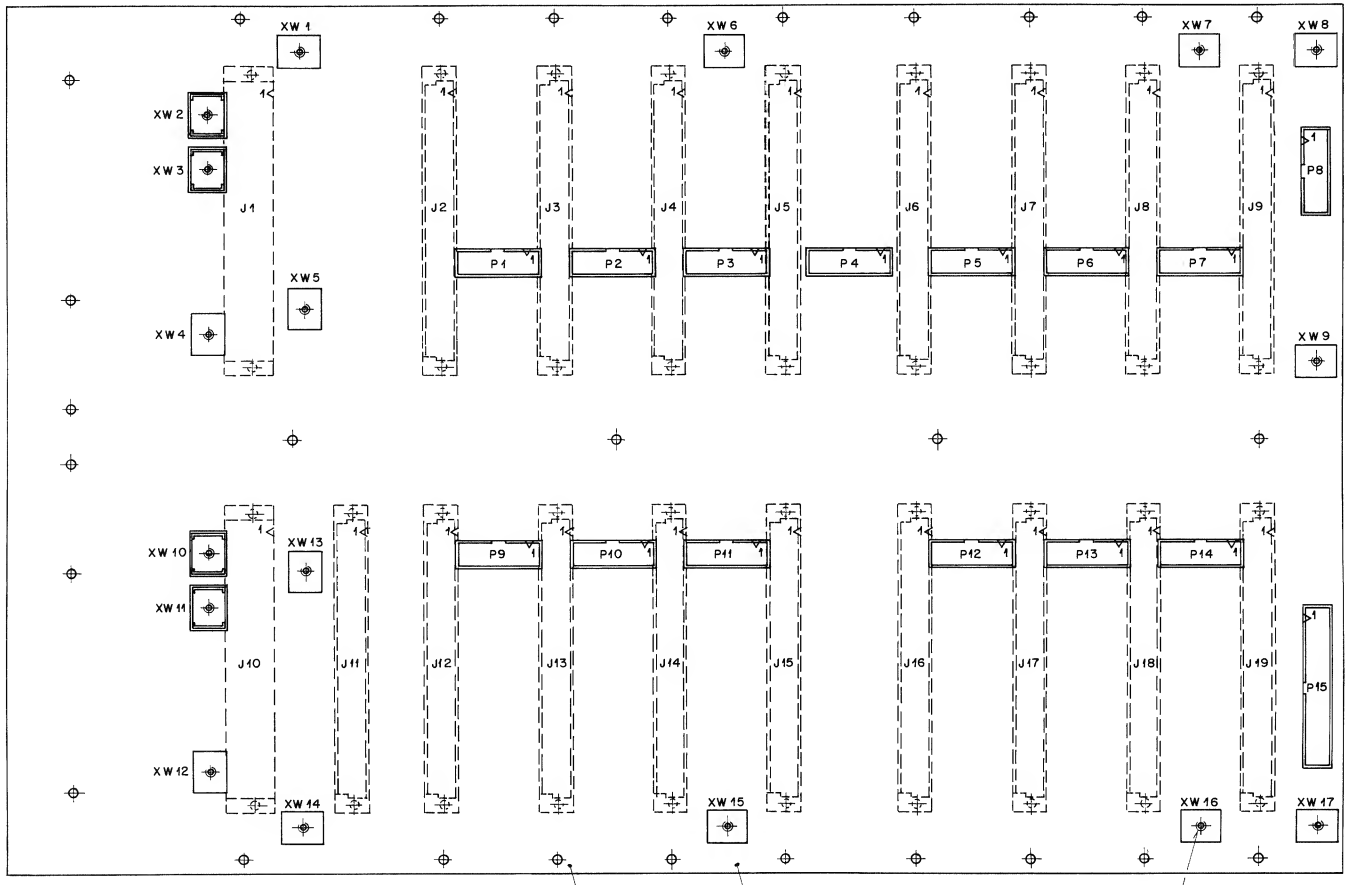

Nr. Etikette MP 2
aufgeklebt nach Fabrikationsmuster.

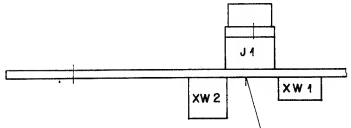

Bestückungsdruck

IND.	POS.NO.	PART NO.	VALUE	SPECIFICATIONS / EQUIVALENT	MANUF.
	J..0001	54.11.2012		EURO 3 * 16, TYP F, PRINT	AMP
	J..0002	54.11.2011		EURO 3 * 32, TYP C, PRINT	AMP
	J..0003	54.11.2011		EURO 3 * 32, TYP C, PRINT	AMP
	J..0004	54.11.2011		EURO 3 * 32, TYP C, PRINT	AMP
	J..0005	54.11.2011		EURO 3 * 32, TYP C, PRINT	AMP
	J..0006	54.11.2011		EURO 3 * 32, TYP C, PRINT	AMP
	J..0007	54.11.2011		EURO 3 * 32, TYP C, PRINT	AMP
	J..0008	54.11.2011		EURO 3 * 32, TYP C, PRINT	AMP
	J..0009	54.11.2011		EURO 3 * 32, TYP C, PRINT	AMP
	J..0010	54.11.2012		EURO 3 * 16, TYP F, PRINT	AMP
	J..0011	54.11.2011		EURO 3 * 32, TYP C, PRINT	AMP
	J..0012	54.11.2011		EURO 3 * 32, TYP C, PRINT	AMP
	J..0013	54.11.2011		EURO 3 * 32, TYP C, PRINT	AMP
	J..0014	54.11.2011		EURO 3 * 32, TYP C, PRINT	AMP
	J..0015	54.11.2011		EURO 3 * 32, TYP C, PRINT	AMP
	J..0016	54.11.2011		EURO 3 * 32, TYP C, PRINT	AMP
	J..0017	54.11.2011		EURO 3 * 32, TYP C, PRINT	AMP
	J..0018	54.11.2011		EURO 3 * 32, TYP C, PRINT	AMP
	J..0019	54.11.2011		EURO 3 * 32, TYP C, PRINT	AMP
	MP.0001	1.862.610.11		BACKPANEL "AA2" PCB (4 LAYERS)	St
	MP.0002	1.862.610.01		ETIK. PRINT.NR.	St
	P..0001	54.14.4016		STECKER 16 P, AU, PRINT	AMP
	P..0002	54.14.4016		STECKER 16 P, AU, PRINT	AMP
	P..0003	54.14.4016		STECKER 16 P, AU, PRINT	AMP
	P..0004	54.14.4016		STECKER 16 P, AU, PRINT	AMP
	P..0005	54.14.4016		STECKER 16 P, AU, PRINT	AMP
	P..0006	54.14.4016		STECKER 16 P, AU, PRINT	AMP
	P..0007	54.14.4016		STECKER 16 P, AU, PRINT	AMP
	P..0008	54.14.4016		STECKER 16 P, AU, PRINT	AMP
	P..0009	54.14.4016		STECKER 16 P, AU, PRINT	AMP
	P..0010	54.14.4016		STECKER 16 P, AU, PRINT	AMP
	P..0011	54.14.4016		STECKER 16 P, AU, PRINT	AMP
	P..0012	54.14.4016		STECKER 16 P, AU, PRINT	AMP
	P..0013	54.14.4016		STECKER 16 P, AU, PRINT	AMP
	P..0014	54.14.4016		STECKER 16 P, AU, PRINT	AMP

S T U D E R (00) 89/08/21 LAR BACKPANEL AA2 PL 1.862.610.00 PAGE 1

IND.	POS.NO.	PART NO.	VALUE	SPECIFICATIONS / EQUIVALENT	MANUF.
	P..0015	54.14.4034		STECKER 34 P, AU, PRINT	AMP
	XW.0001	53.05.0147		POWER TERMINAL OPEN, ACTION PIN	AMP
	XW.0002	53.05.0148		POWER TERMINAL WITH LID, ACTION PIN	AMP
	XW.0003	53.05.0148		POWER TERMINAL WITH LID, ACTION PIN	AMP
	XW.0004	53.05.0147		POWER TERMINAL OPEN, ACTION PIN	AMP
	XW.0005	53.05.0147		POWER TERMINAL OPEN, ACTION PIN	AMP
	XW.0006	53.05.0147		POWER TERMINAL OPEN, ACTION PIN	AMP
	XW.0007	53.05.0147		POWER TERMINAL OPEN, ACTION PIN	AMP
	XW.0008	53.05.0147		POWER TERMINAL OPEN, ACTION PIN	AMP
	XW.0009	53.05.0147		POWER TERMINAL OPEN, ACTION PIN	AMP
	XW.0010	53.05.0148		POWER TERMINAL WITH LID, ACTION PIN	AMP
	XW.0011	53.05.0148		POWER TERMINAL WITH LID, ACTION PIN	AMP
	XW.0012	53.05.0147		POWER TERMINAL OPEN, ACTION PIN	AMP
	XW.0013	53.05.0147		POWER TERMINAL OPEN, ACTION PIN	AMP
	XW.0014	53.05.0147		POWER TERMINAL OPEN, ACTION PIN	AMP
	XW.0015	53.05.0147		POWER TERMINAL OPEN, ACTION PIN	AMP
	XW.0016	53.05.0147		POWER TERMINAL OPEN, ACTION PIN	AMP
	XW.0017	53.05.0147		POWER TERMINAL OPEN, ACTION PIN	AMP

REMARKS:

```
*****************************************
* 4-LAYER PRINT MIT BESTUECKUNGSDRUCK *
*****************************************
```

MANUFACTURERS:
St = STUDER, Ph = PHILIPS, BB = BURR BROWN, Ha = HARRIS

ABBREVIATIONS:
CER = CERAMIC / FILM = FILM TYPE / XF = CLAMP FOR FUSES /
XIC = IC SOCKET / XW = POWER TERMINAL

ORIG 89/08/21

S T U D E R (00) 89/08/21 LAR BACKPANEL AA2 PL 1.862.610.00 PAGE 2

BACKPANEL AS1 1.862.611.0

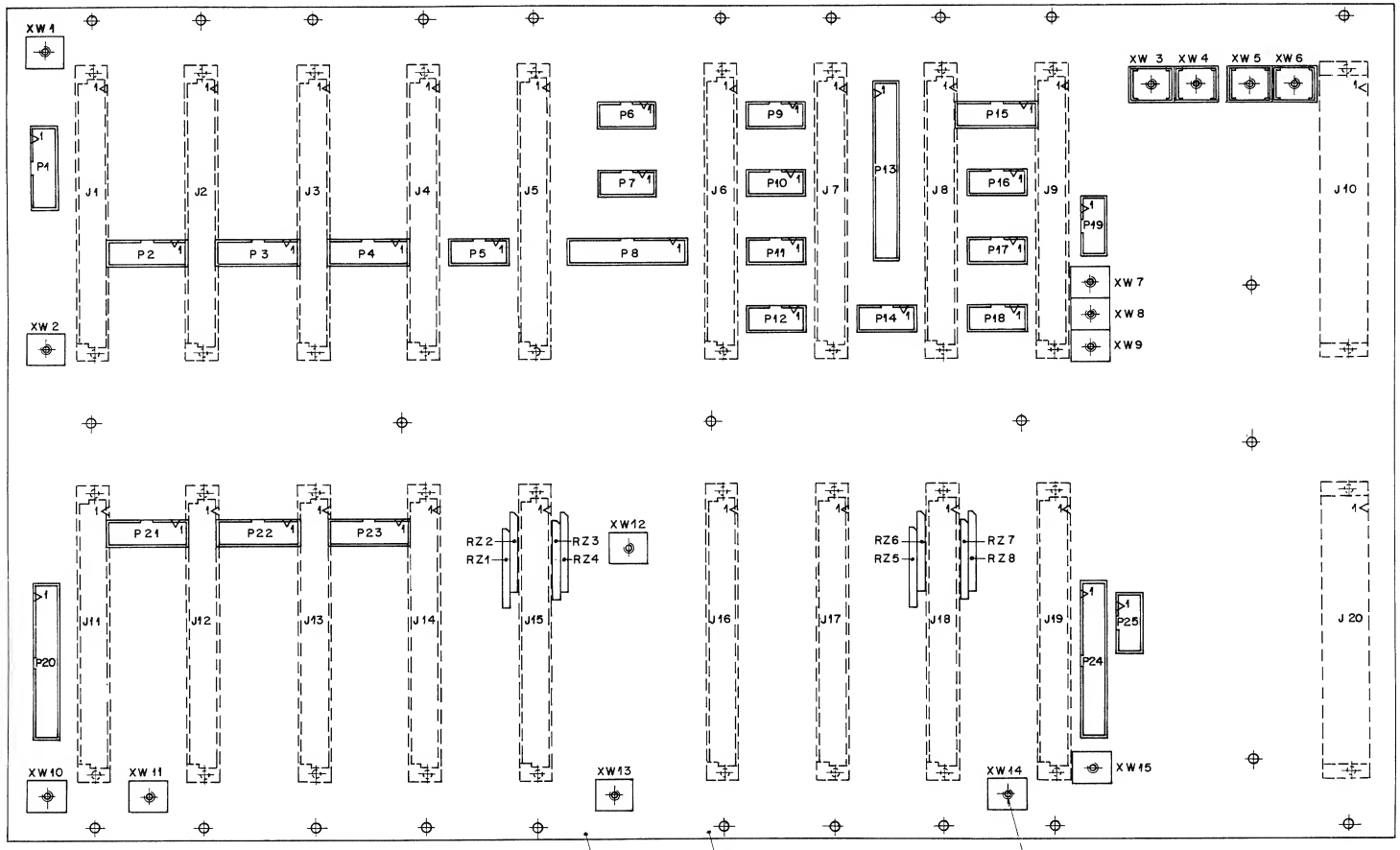

MP 1

Lötseite

Schrauben lose mitliefern.

Nr. Etikette MP 2
aufgeklebt nach Fabrikationsmuster.

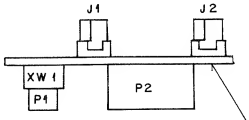

Bestückungsdruck

IND.	POS.NO.	PART NO.	VALUE	SPECIFICATIONS / EQUIVALENT	MANUF.
	J..0001	54.11.2011		EURO 3 * 32, TYP C, PRINT	AMP
	J..0002	54.11.2011		EURO 3 * 32, TYP C, PRINT	AMP
	J..0003	54.11.2011		EURO 3 * 32, TYP C, PRINT	AMP
	J..0004	54.11.2011		EURO 3 * 32, TYP C, PRINT	AMP
	J..0005	54.11.2011		EURO 3 * 32, TYP C, PRINT	AMP
	J..0006	54.11.2011		EURO 3 * 32, TYP C, PRINT	AMP
	J..0007	54.11.2011		EURO 3 * 32, TYP C, PRINT	AMP
	J..0008	54.11.2011		EURO 3 * 32, TYP C, PRINT	AMP
	J..0009	54.11.2011		EURO 3 * 32, TYP C, PRINT	AMP
	J..0010	54.11.2012		EURO 3 * 16, TYP F, PRINT	AMP
	J..0011	54.11.2011		EURO 3 * 32, TYP C, PRINT	AMP
	J..0012	54.11.2011		EURO 3 * 32, TYP C, PRINT	AMP
	J..0013	54.11.2011		EURO 3 * 32, TYP C, PRINT	AMP
	J..0014	54.11.2011		EURO 3 * 32, TYP C, PRINT	AMP
	J..0015	54.11.2011		EURO 3 * 32, TYP C, PRINT	AMP
	J..0016	54.11.2011		EURO 3 * 32, TYP C, PRINT	AMP
	J..0017	54.11.2011		EURO 3 * 32, TYP C, PRINT	AMP
	J..0018	54.11.2011		EURO 3 * 32, TYP C, PRINT	AMP
	J..0019	54.11.2011		EURO 3 * 32, TYP C, PRINT	AMP
	J..0020	54.11.2012		EURO 3 * 16, TYP F, PRINT	AMP
	MP.0001	1.862.611.11		BACKPANEL "AS1" PCB (4 LAYERS)	St
	MP.0002	1.862.611.01		ETIK. PRINT.NR.	St
	P..0001	54.14.4016		STECKER 16 P, AU, PRINT	AMP
	P..0002	54.14.4016		STECKER 16 P, AU, PRINT	AMP
	P..0003	54.14.4016		STECKER 16 P, AU, PRINT	AMP
	P..0004	54.14.4016		STECKER 16 P, AU, PRINT	AMP
	P..0005	54.14.4010		STECKER 10 P, AU, PRINT	AMP
	P..0006	54.14.4010		STECKER 10 P, AU, PRINT	AMP
	P..0007	54.14.4010		STECKER 10 P, AU, PRINT	AMP
	P..0008	54.14.4026		STECKER 26 P, AU, PRINT	AMP
	P..0009	54.14.4010		STECKER 10 P, AU, PRINT	AMP
	P..0010	54.14.4010		STECKER 10 P, AU, PRINT	AMP
	P..0011	54.14.4010		STECKER 10 P, AU, PRINT	AMP
	P..0012	54.14.4010		STECKER 10 P, AU, PRINT	AMP
	P..0013	54.14.4040		STECKER 40 P, AU, PRIN1	AMP

S T U D E R (00) 89/08/21 LAR BACKPANEL AS1 PL 1.862.611.00 PAGE 1

IND.	POS.NO.	PART NO.	VALUE	SPECIFICATIONS / EQUIVALENT	MANUF.
	P..0014	54.14.4010		STECKER 10 P, AU, PRINT	AMP
	P..0015	54.14.4016		STECKER 16 P, AU, PRINT	AMP
	P..0016	54.14.4010		STECKER 10 P, AU, PRINT	AMP
	P..0017	54.14.4010		STECKER 10 P, AU, PRINT	AMP
	P..0018	54.14.4010		STECKER 10 P, AU, PRINT	AMP
	P..0019	54.14.4010		STECKER 10 P, AU, PRINT	AMP
	P..0020	54.14.4034		STECKER 34 P, AU, PRINT	AMP
	P..0021	54.14.4016		STECKER 16 P, AU, PRINT	AMP
	P..0022	54.14.4016		STECKER 16 P, AU, PRINT	AMP
	P..0023	54.14.4016		STECKER 16 P, AU, PRINT	AMP
	P..0024	54.14.4034		STECKER 34 P, AU, PRINT	AMP
	P..0025	54.14.4010		STECKER 10 P, AU, PRINT	AMP
	XW.0001	53.05.0147		POWER TERMINAL OPEN, ACTION PIN	AMP
	XW.0002	53.05.0147		POWER TERMINAL OPEN, ACTION PIN	AMP
	XW.0003	53.05.0148		POWER TERMINAL WITH LID, ACTION PIN	AMP
	XW.0004	53.05.0148		POWER TERMINAL WITH LID, ACTION PIN	AMP
	XW.0005	53.05.0148		POWER TERMINAL WITH LID, ACTION PIN	AMP
	XW.0006	53.05.0148		POWER TERMINAL WITH LID, ACTION PIN	AMP
	XW.0007	53.05.0147		POWER TERMINAL OPEN, ACTION PIN	AMP
	XW.0008	53.05.0147		POWER TERMINAL OPEN, ACTION PIN	AMP
	XW.0009	53.05.0147		POWER TERMINAL OPEN, ACTION PIN	AMP
	XW.0010	53.05.0147		POWER TERMINAL OPEN, ACTION PIN	AMP
	XW.0011	53.05.0147		POWER TERMINAL OPEN, ACTION PIN	AMP
	XW.0012	53.05.0147		POWER TERMINAL OPEN, ACTION PIN	AMP
	XW.0013	53.05.0147		POWER TERMINAL OPEN, ACTION PIN	AMP
	XW.0014	53.05.0147		POWER TERMINAL OPEN, ACTION PIN	AMP
	XW.0015	53.05.0147		POWER TERMINAL OPEN, ACTION PIN	AMP

S T U D E R (00) 89/08/21 LAR BACKPANEL AS1 PL 1.862.611.00 PAGE 2

IND.	POS.NO.	PART NO.	VALUE	SPECIFICATIONS / EQUIVALENT	MANUF.

REMARKS:

```
*****************************************
* 4-LAYER PRINT MIT BESTUECKUNGSDRUCK *
*****************************************
```

MANUFACTURERS:
St = STUDER, Ph = PHILIPS, BB = BURR BROWN, Ha = HARRIS

ABBREVIATIONS:
CER = CERAMIC / FILM = FILM TYPE / XF = CLAMP FOR FUSES /
XIC = IC SOCKET / XW = POWER TERMINAL

ORIG 89/08/21

S T U D E R (00) 89/08/21 LAR BACKPANEL AS1 PL 1.862.611.00 PAGE 3

BACKPANEL AS2 1.862.612.00

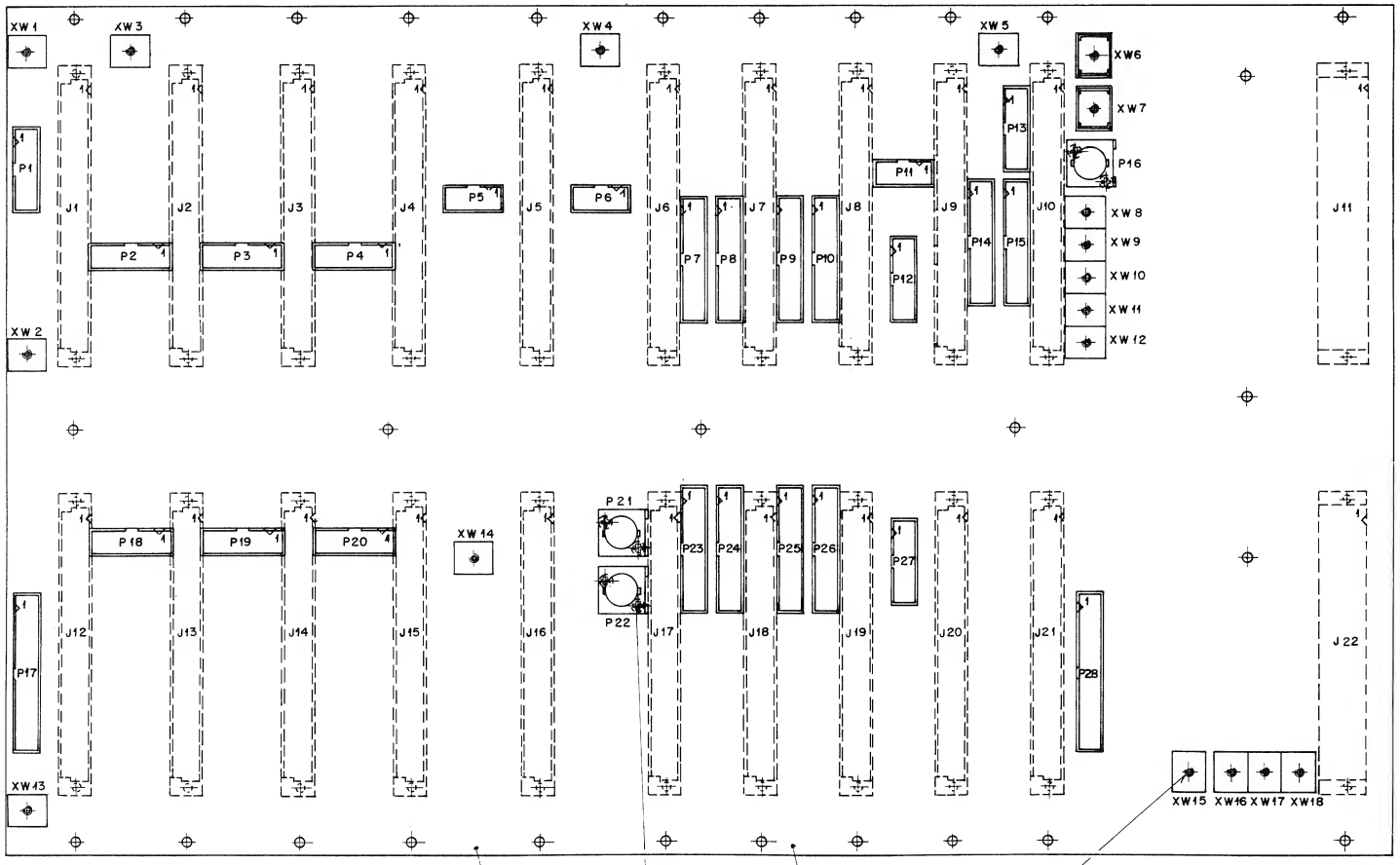

Schrauben lose mitliefern.

Nr. Etikette MP 2
aufgeklebt nach Fabrikationsmuster.

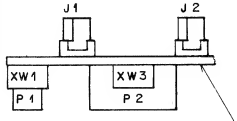

Bestückungsdruck

IND.	POS.NO.	PART NO.	VALUE	SPECIFICATIONS / EQUIVALENT	MANUF.
	J..0001	54.11.2011		EURO 3 * 32, TYP C, PRINT	AMP
	J..0002	54.11.2011		EURO 3 * 32, TYP C, PRINT	AMP
	J..0003	54.11.2011		EURO 3 * 32, TYP C, PRINT	AMP
	J..0004	54.11.2011		EURO 3 * 32, TYP C, PRINT	AMP
	J..0005	54.11.2011		EURO 3 * 32, TYP C, PRINT	AMP
	J..0006	54.11.2011		EURO 3 * 32, TYP C, PRINT	AMP
	J..0007	54.11.2011		EURO 3 * 32, TYP C, PRINT	AMP
	J..0008	54.11.2011		EURO 3 * 32, TYP C, PRINT	AMP
	J..0009	54.11.2011		EURO 3 * 32, TYP C, PRINT	AMP
	J..0010	54.11.2011		EURO 3 * 32, TYP C, PRINT	AMP
	J..0011	54.11.2012		EURO 3 * 16, TYP F, PRINT	AMP
	J..0012	54.11.2011		EURO 3 * 32, TYP C, PRINT	AMP
	J..0013	54.11.2011		EURO 3 * 32, TYP C, PRINT	AMP
	J..0014	54.11.2011		EURO 3 * 32, TYP C, PRINT	AMP
	J..0015	54.11.2011		EURO 3 * 32, TYP C, PRINT	AMP
	J..0016	54.11.2011		EURO 3 * 32, TYP C, PRINT	AMP
	J..0017	54.11.2011		EURO 3 * 32, TYP C, PRINT	AMP
	J..0018	54.11.2011		EURO 3 * 32, TYP C, PRINT	AMP
	J..0019	54.11.2011		EURO 3 * 32, TYP C, PRINT	AMP
	J..0020	54.11.2011		EURO 3 * 32, TYP C, PRINT	AMP
	J..0021	54.11.2011		EURO 3 * 32, TYP C, PRINT	AMP
	J..0022	54.11.2012		EURO 3 * 16, TYP F, PRINT	AMP
	MP.0001	1.862.612.11		BACKPANEL "AS2" PCB (4 LAYERS)	St
	MP.0002	1.862.612.01		ETIK. PRINT.NR.	St
	MP.0003	20.24.7280		LIN-FORMSCH.ZNSW.K5 D2.5* 8	ANY
	MP.0004	20.24.7280		LIN-FORMSCH.ZNSW.K5 D2.5* 8	ANY
	MP.0005	20.24.7280		LIN-FORMSCH.ZNSW.K5 D2.5* 8	ANY
	MP.0006	20.24.7280		LIN-FORMSCH.ZNSW.K5 D2.5* 8	ANY
	MP.0007	20.24.7280		LIN-FORMSCH.ZNSW.K5 D2.5* 8	ANY
	MP.0008	20.24.7280		LIN-FORMSCH.ZNSW.K5 D2.5* 8	ANY
	P..0001	54.14.4016		STECKER 16 P, AU, PRINT	AMP
	P..0002	54.14.4016		STECKER 16 P, AU, PRINT	AMP
	P..0003	54.14.4016		STECKER 16 P, AU, PRINT	AMP
	P..0004	54.14.4016		STECKER 16 P, AU, PRINT	AMP
	P..0005	54.14.4010		STECKER 10 P, AU, PRINT	AMP

S T U D E R (00) 89/08/21 LAR BACKPANEL AS2 PL 1.862.612.00 PAGE 1

IND.	POS.NO.	PART NO.	VALUE	SPECIFICATIONS / EQUIVALENT	MANUF.
	P..0006	54.14.4010		STECKER 10 P, AU, PRINT	AMP
	P..0007	54.14.4026		STECKER 26 P, AU, PRINT	AMP
	P..0008	54.14.4026		STECKER 26 P, AU, PRINT	AMP
	P..0009	54.14.4026		STECKER 26 P, AU, PRINT	AMP
	P..0010	54.14.4026		STECKER 26 P, AU, PRINT	AMP
	P..0011	54.14.4010		STECKER 10 P, AU, PRINT	AMP
	P..0012	54.14.4016		STECKER 16 P, AU, PRINT	AMP
	P..0013	54.14.4016		STECKER 16 P, AU, PRINT	AMP
	P..0014	54.14.4026		STECKER 26 P, AU, PRINT	AMP
	P..0015	54.14.4026		STECKER 26 P, AU, PRINT	AMP
	P..0016	54.21.2020		1 POL PRINT/CHASSIS BNC	AMP
	P..0017	54.14.4034		STECKER 34 P, AU, PRINT	AMP
	P..0018	54.14.4016		STECKER 16 P, AU, PRINT	AMP
	P..0019	54.14.4016		STECKER 16 P, AU, PRINT	AMP
	P..0020	54.14.4016		STECKER 16 P, AU, PRINT	AMP
	P..0021	54.21.2020		1 POL PRINT/CHASSIS BNC	AMP
	P..0022	54.21.2020		1 POL PRINT/CHASSIS BNC	AMP
	P..0023	54.14.4026		STECKER 26 P, AU, PRINT	AMP
	P..0024	54.14.4026		STECKER 26 P, AU, PRINT	AMP
	P..0025	54.14.4026		STECKER 26 P, AU, PRINT	AMP
	P..0026	54.14.4026		STECKER 26 P, AU, PRINT	AMP
	P..0027	54.14.4016		STECKER 16 P, AU, PRINT	AMP
	P..0028	54.14.4034		STECKER 34 P, AU, PRINT	AMP
	XW.0001	53.05.0147		POWER TERMINAL OPEN, ACTION PIN	AMP
	XW.0002	53.05.0147		POWER TERMINAL OPEN, ACTION PIN	AMP
	XW.0003	53.05.0147		POWER TERMINAL OPEN, ACTION PIN	AMP
	XW.0004	53.05.0147		POWER TERMINAL OPEN, ACTION PIN	AMP
	XW.0005	53.05.0147		POWER TERMINAL OPEN, ACTION PIN	AMP
	XW.0006	53.05.0148		POWER TERMINAL WITH LID, ACTION PIN	AMP
	XW.0007	53.05.0148		POWER TERMINAL WITH LID, ACTION PIN	AMP
	XW.0008	53.05.0147		POWER TERMINAL OPEN, ACTION PIN	AMP
	XW.0009	53.05.0147		POWER TERMINAL OPEN, ACTION PIN	AMP
	XW.0010	53.05.0147		POWER TERMINAL OPEN, ACTION PIN	AMP
	XW.0011	53.05.0147		POWER TERMINAL OPEN, ACTION PIN	AMP
	XW.0012	53.05.0147		POWER TERMINAL OPEN, ACTION PIN	AMP
	XW.013	53.05.0147		POWER TERMINAL OPEN, ACTION PIN	AMP

S T U D E R (00) 89/08/21 LAR BACKPANEL AS2 PL 1.862.612.00 PAGE 2

IND.	POS.NO.	PART NO.	VALUE	SPECIFICATIONS / EQUIVALENT	MANUF.
	XW.0014	53.05.0147		POWER TERMINAL OPEN, ACTION PIN	AMP
	XW.0015	53.05.0147		POWER TERMINAL OPEN, ACTION PIN	AMP
	XW.0016	53.05.0147		POWER TERMINAL OPEN, ACTION PIN	AMP
	XW.0017	53.05.0147		POWER TERMINAL OPEN, ACTION PIN	AMP
	XW.0018	53.05.0147		POWER TERMINAL OPEN, ACTION PIN	AMP

REMARKS:

```
****************************************
* 4-LAYER PRINT MIT BESTUECKUNGSDRUCK *
****************************************
```

MANUFACTURERS:
St = STUDER, Ph = PHILIPS, BB = BURR BROWN, Ha = HARRIS

ABBREVIATIONS:
CER = CERAMIC / FILM = FILM TYPE / XF = CLAMP FOR FUSES /
XIC = IC SOCKET / XW = POWER TERMINAL

ORIG 89/08/21

S T U D E R (00) 89/08/21 LAR BACKPANEL AS2 PL 1.862.612.00 PAGE 3

ANALOG CONCENTRATOR UNIT 1.862.613.00

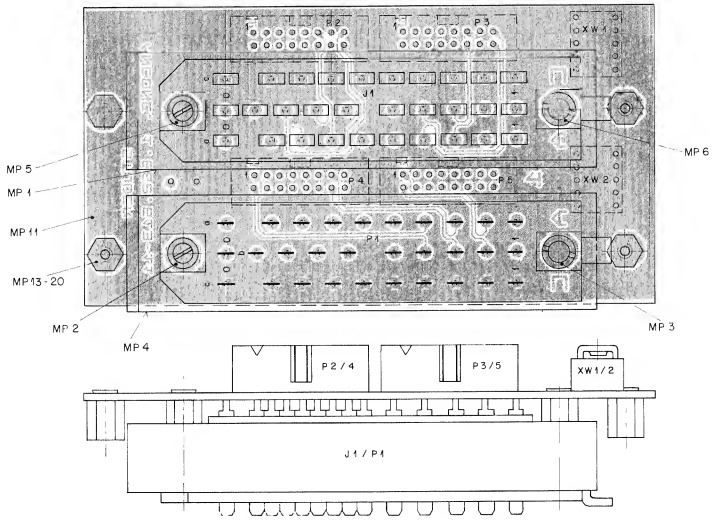

IND.	POS.NO.	PART NO.	VALUE	SPECIFICATIONS / EQUIVALENT	MANUF.
	J.....1	54.14.1032		BUCHSE 30 POL PRINT	ANY
	XW....1	53.05.0147		POWER TERMINAL/OPEN, ACTION PIN	ANY
	XW....2	53.05.0147		POWER TERMINAL/OPEN, ACTION PIN	ANY
	MP....1	54.14.7002		RIEGELWANNE 30/39 POL	ANY
	MP....2	54.14.7020		PASS-STIFT	ANY
	MP....3	54.14.7023		PASS-BUCHSE	ANY
	MP....4	54.14.7002		RIEGELWANNE 30/39 POL	ANY
	MP....5	54.14.7020		PASS-STIFT	ANY
	MP....6	54.14.7023		PASS-BUCHSE	ANY
	MP...11	1.862.613.11		AMCOMC PCB	ANY
	MP...12	1.862.613.01		ETIKETTE	ANY
	MP...13	1.862.613.02		NIETMUTTER M3x4.8 (FUER 2.4MM PRINT)	ST
	MP...14	1.862.613.02		NIETMUTTER M3x4.8 (FUER 2.4MM PRINT)	ST
	MP...15	1.862.613.02		NIETMUTTER M3x4.8 (FUER 2.4MM PRINT)	ST
	MP...16	1.862.613.02		NIETMUTTER M3x4.8 (FUER 2.4MM PRINT)	ST
	MP...17	1.862.613.02		NIETMUTTER M3x4.8 (FUER 2.4MM PRINT)	ST
	MP...18	1.862.613.02		NIETMUTTER M3x4.8 (FUER 2.4MM PRINT)	ST
	MP...19	1.862.613.02		NIETMUTTER M3x4.8 (FUER 2.4MM PRINT)	ST
	MP...20	1.862.613.02		NIETMUTTER M3x4.8 (FUER 2.4MM PRINT)	ST
	P.....1	54.14.1022		LEISTE 30 POL PRINT	ANY
	P.....2	54.14.4016		STECKER 16 P , ACTION PIN	ANY
	P.....3	54.14.4016		STECKER 16 P , ACTION PIN	ANY
	P.....4	54.14.4016		STECKER 16 P , ACTION PIN	ANY
	P.....5	54.14.4016		STECKER 16 P , ACTION PIN	ANY

IND.	POS.NO.	PART NO.	VALUE	SPECIFICATIONS / EQUIVALENT	MANUF.

REMARKS: 22.2.89 ZT
INF.2 Powerterminal

MANUFACTURERS:
St = STUDER, Ph = PHILIPS, BB = BURR BROWN, Ha = HARRIS

ABBREVIATIONS:

ORIG 88/10/07

DIGITAL CONCENTRATOR UNIT 1.862.614.00

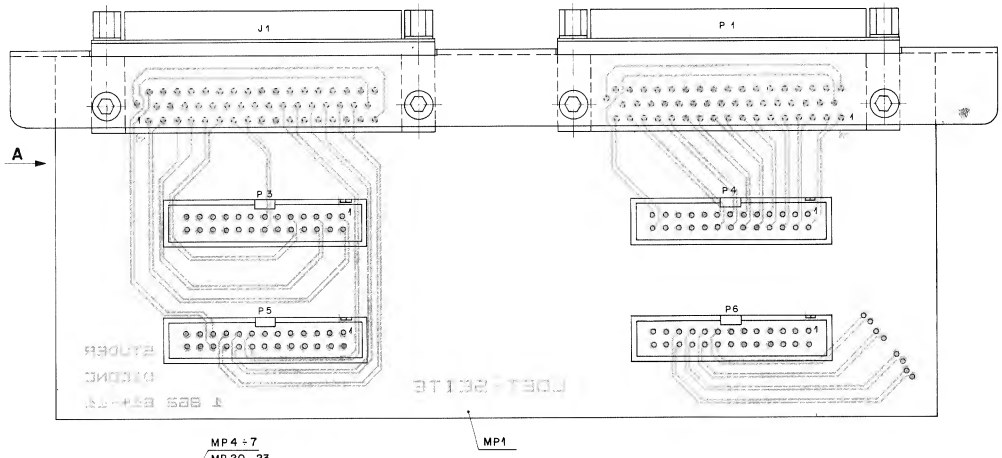

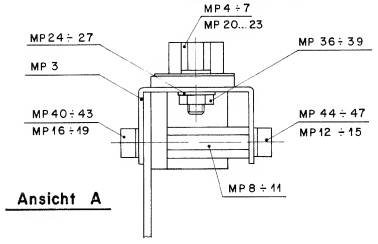

IND.	POS.NO.	PART NO.	VALUE	SPECIFICATIONS / EQUIVALENT	MANUF.
	J..0001	54.13.0005	D-TYPE	50 POL.WINKL.PRINT	ANY
	MP.0001	1.862.614.11		DICOMC PCB	ST
	MP.0002	1.862.614.01		ME.-ETIKETTE 5420	ST
	MP.0003	1.862.614.02		PRINTHALTER	ST
	MP.0004	1.010.036.54		VERRIEGELUNGS-GEWINDEBOLZEN (D-SUB)	ST
	MP.0005	1.010.036.54		VERRIEGELUNGS-GEWINDEBOLZEN (D-SUB)	ST
	MP.0006	1.010.036.54		VERRIEGELUNGS-GEWINDEBOLZEN (D-SUB)	ST
	MP.0007	1.010.036.54		VERRIEGELUNGS-GEWINDEBOLZEN (D-SUB)	ST
	MP.0008	1.010.201.27		MUTTERBOLZEN M3 * 16	ST
	MP.0009	1.010.201.27		MUTTERBOLZEN M3 * 16	ST
	MP.0010	1.010.201.27		MUTTERBOLZEN M3 * 16	ST
	MP.0011	1.010.201.27		MUTTERBOLZEN M3 * 16	ST
	MP.0012	24.16.1030		RIPPENSCHEIBE D 3.2/5.5	ANY
	MP.0013	24.16.1030		RIPPENSCHEIBE D 3.2/5.5	ANY
	MP.0014	24.16.1030		RIPPENSCHEIBE D 3.2/5.5	ANY
	MP.0015	24.16.1030		RIPPENSCHEIBE D 3.2/5.5	ANY
	MP.0016	24.16.1030		RIPPENSCHEIBE D 3.2/5.5	ANY
	MP.0017	24.16.1030		RIPPENSCHEIBE D 3.2/5.5	ANY
	MP.0018	24.16.1030		RIPPENSCHEIBE D 3.2/5.5	ANY
	MP.0019	24.16.1030		RIPPENSCHEIBE D 3.2/5.5	ANY
	MP.0020	24.16.1030		RIPPENSCHEIBE D 3.2/5.5	ANY
	MP.0021	24.16.1030		RIPPENSCHEIBE D 3.2/5.5	ANY
	MP.0022	24.16.1030		RIPPENSCHEIBE D 3.2/5.5	ANY
	MP.0023	24.16.1030		RIPPENSCHEIBE D 3.2/5.5	ANY
	MP.0024	23.01.2032		U-SCHEIBE D 3.2/7*0.5	ANY
	MP.0025	23.01.2032		U-SCHEIBE D 3.2/7*0.5	ANY
	MP.0026	23.01.2032		U-SCHEIBE D 3.2/7*0.5	ANY
	MP.0027	23.01.2032		U-SCHEIBE D 3.2/7*0.5	ANY
(00)	MP.0028	23.01.2032		U-SCHEIBE D 3.2/7*0.5	ANY
(01)	MP.0028			NOT USED	ANY
(00)	MP.0029	23.01.2032		U-SCHEIBE D 3.2/7*0.5	ANY
(01)	MP.0029			NOT USED	ANY
(00)	MP.0030	23.01.2032		U-SCHEIBE D 3.2/7*0.5	ANY
(01)	MP.0030			NOT USED	ANY
(00)	MP.0031	23.01.2032		U-SCHEIBE D 3.2/7*0.5	ANY
(01)	MP.0031			NOT USED	ANY

IND.	POS.NO.	PART NO.	VALUE	SPECIFICATIONS / EQUIVALENT	MANUF.
(00)	MP.0032	23.01.2032		U-SCHEIBE D 3.2/7*0.5	ANY
(01)	MP.0032			NOT USED	ANY
(00)	MP.0033	23.01.2032		U-SCHEIBE D 3.2/7*0.5	ANY
(01)	MP.0033			NOT USED	ANY
(00)	MP.0034	23.01.2032		U-SCHEIBE D 3.2/7*0.5	ANY
(01)	MP.0034			NOT USED	ANY
(00)	MP.0035	23.01.2032		U-SCHEIBE D 3.2/7*0.5	ANY
(01)	MP.0035			NOT USED	ANY
	MP.0036	22.01.8030		6KT-MUTTER 0.8D/M3	ANY
	MP.0037	22.01.8030		6KT-MUTTER 0.8D/M3	ANY
	MP.0038	22.01.8030		6KT-MUTTER 0.8D/M3	ANY
	MP.0039	22.01.8030		6KT-MUTTER 0.8D/M3	ANY
	MP.0040	21.53.0356		Z-SCHR. IS/ ZN/ M3*10	ANY
	MP.0041	21.53.0356		Z-SCHR. IS/ ZN/ M3*10	ANY
	MP.0042	21.53.0356		Z-SCHR. IS/ ZN/ M3*10	ANY
	MP.0043	21.53.0356		Z-SCHR. IS/ ZN/ M3*10	ANY
	MP.0044	21.53.0354		Z-SCHR. IS/ ZN/ M3*6	ANY
	MP.0045	21.53.0354		Z-SCHR. IS/ ZN/ M3*6	ANY
	MP.0046	21.53.0354		Z-SCHR. IS/ ZN/ M3*6	ANY
	MP.0047	21.53.0354		Z-SCHR. IS/ ZN/ M3*6	ANY
	P..0001	54.13.0015	D-TYPE	50 POL.WINKL.PRINT	ANY
	P..0002	54.14.2003		STECKER 26 P / SN/ GERADE	ANY
	P..0003	54.14.2003		STECKER 26 P / SN/ GERADE	ANY
	P..0004	54.14.2003		STECKER 26 P / SN/ GERADE	ANY
	P..0005	54.14.2003		STECKER 26 P / SN/ GERADE	ANY

IND.	POS.NO.	PART NO.	VALUE	SPECIFICATIONS / EQUIVALENT	MANUF.

REMARKS:

MANUFACTURERS:
St = STUDER/ Ph = PHILIPS/ BB = BURR BROWN/ Ha = HARRIS

ABBREVIATIONS:

ORIG 88/10/05 (01) 89/10/13

MICONC 1.862.615.00

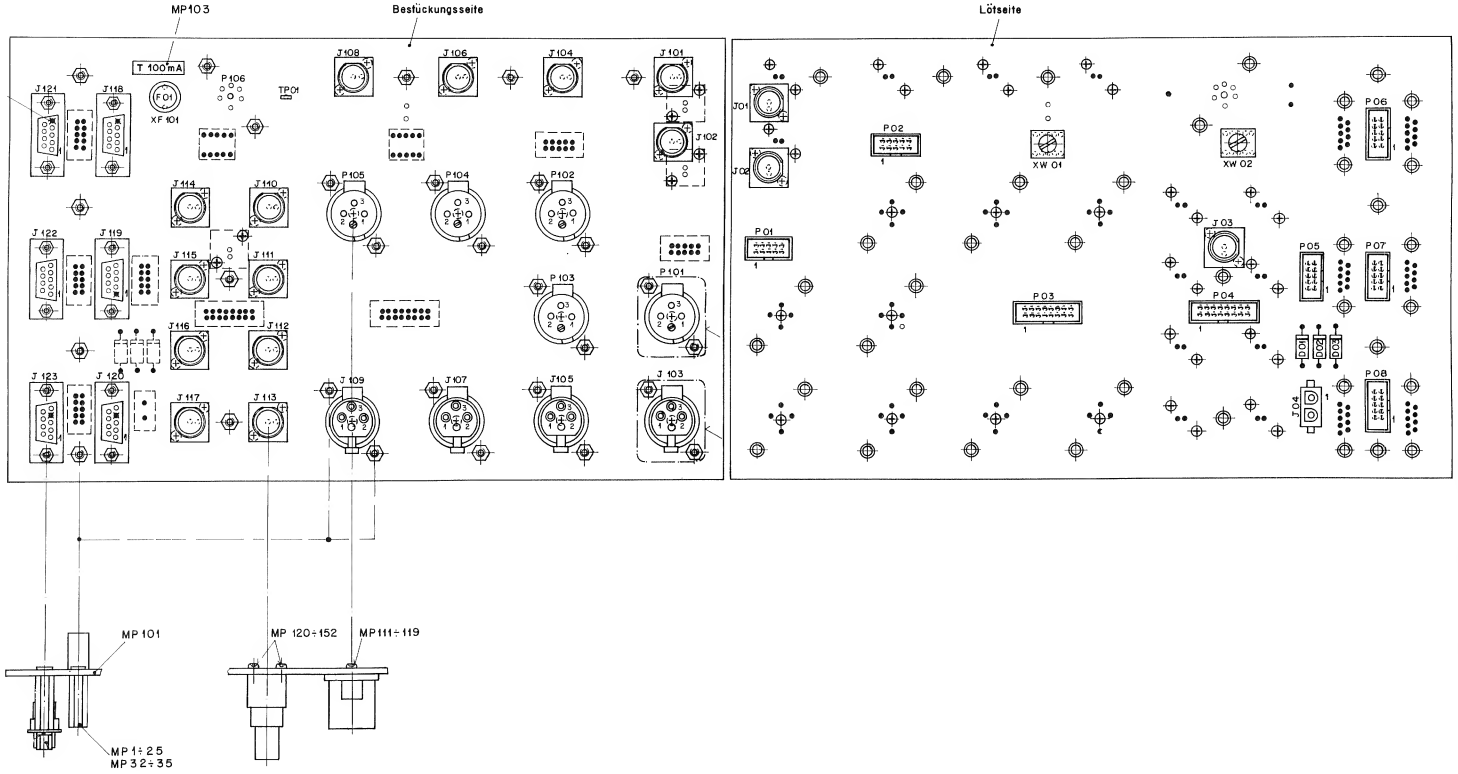

IND.	POS.NO.	PART NO.	VALUE	SPECIFICATIONS / EQUIVALENT	MANUF.
	D..0001	50.04.0507		1N 5402 (3A)	ANY
	D..0002	50.04.0507		1N 5402 (3A)	ANY
	D..0003	50.04.0507		1N 5402 (3A)	ANY
	F..0001	51.01.0107		SICHERUNG T 100mA	ANY
	J..0001	54.21.2020		1 POL PRINT/CHASSIS BNC	AMP
	J..0002	54.21.2020		1 POL PRINT/CHASSIS BNC	AMP
	J..0003	54.21.2020		1 POL PRINT/CHASSIS BNC	AMP
	J..0004	54.25.0002		2 POL W PRINT BUCHSE	ANY
	J..0101	54.21.2020		1 POL PRINT/CHASSIS BNC	AMP
	J..0102	54.21.2020		1 POL PRINT/CHASSIS BNC	AMP
	J..0103	54.21.2002		3 POL W CHASSIS/PRINT XLR	ANY
	J..0104	54.21.2020		1 POL PRINT/CHASSIS BNC	AMP
	J..0105	54.21.2002		3 POL W CHASSIS/PRINT XLR	ANY
	J..0106	54.21.2020		1 POL PRINT/CHASSIS BNC	AMP
	J..0107	54.21.2002		3 POL W CHASSIS/PRINT XLR	ANY
	J..0108	54.21.2020		1 POL PRINT/CHASSIS BNC	AMP
	J..0109	54.21.2002		3 POL W CHASSIS/PRINT XLR	ANY
	J..0110	54.21.2020		1 POL PRINT/CHASSIS BNC	AMP
	J..0111	54.21.2020		1 POL PRINT/CHASSIS BNC	AMP
	J..0112	54.21.2020		1 POL PRINT/CHASSIS BNC	AMP
	J..0113	54.21.2020		1 POL PRINT/CHASSIS BNC	AMP
	J..0114	54.21.2020		1 POL PRINT/CHASSIS BNC	AMP
	J..0115	54.21.2020		1 POL PRINT/CHASSIS BNC	AMP
	J..0116	54.21.2020		1 POL PRINT/CHASSIS BNC	AMP
	J..0117	54.21.2020		1 POL PRINT/CHASSIS BNC	AMP
	J..0118	54.13.0036		9 POL W D-SUB	ANY
	J..0119	54.13.0036		9 POL W D-SUB	ANY
	J..0120	54.13.0036		9 POL W D-SUB	ANY
	J..0121	54.13.0036		9 POL W D-SUB	ANY
	J..0122	54.13.0036		9 POL W D-SUB	ANY
	J..0123	54.13.0036		9 POL W D-SUB	ANY
	MP.0001	1.862.615.02		NIETMUTTER M3 X 19.7 (XLR/2.4MM PRINT)	St
	MP.0002	1.862.615.02		NIETMUTTER M3 X 19.7 (XLR/2.4MM PRINT)	St
	MP.0003	1.862.615.02		NIETMUTTER M3 X 19.7 (XLR/2.4MM PRINT)	St

IND.	POS.NO.	PART NO.	VALUE	SPECIFICATIONS / EQUIVALENT	MANUF.
	MP.0004	1.862.615.02		NIETMUTTER M3 X 19.7 (XLR/2.4MM PRINT)	St
	MP.0005	1.862.615.02		NIETMUTTER M3 X 19.7 (XLR/2.4MM PRINT)	St
	MP.0006	1.862.615.02		NIETMUTTER M3 X 19.7 (XLR/2.4MM PRINT)	St
	MP.0007	1.862.615.02		NIETMUTTER M3 X 19.7 (XLR/2.4MM PRINT)	St
	MP.0008	1.862.615.02		NIETMUTTER M3 X 19.7 (XLR/2.4MM PRINT)	St
	MP.0009	1.862.615.02		NIETMUTTER M3 X 19.7 (XLR/2.4MM PRINT)	St
	MP.0010	1.862.615.02		NIETMUTTER M3 X 19.7 (XLR/2.4MM PRINT)	St
	MP.0011	1.862.615.02		NIETMUTTER M3 X 19.7 (XLR/2.4MM PRINT)	St
	MP.0012	1.862.615.02		NIETMUTTER M3 X 19.7 (XLR/2.4MM PRINT)	St
	MP.0013	1.862.615.02		NIETMUTTER M3 X 19.7 (XLR/2.4MM PRINT)	St
	MP.0014	1.862.615.02		NIETMUTTER M3 X 19.7 (XLR/2.4MM PRINT)	St
	MP.0015	1.862.615.02		NIETMUTTER M3 X 19.7 (XLR/2.4MM PRINT)	St
	MP.0016	1.862.615.02		NIETMUTTER M3 X 19.7 (XLR/2.4MM PRINT)	St
	MP.0017	1.862.615.02		NIETMUTTER M3 X 19.7 (XLR/2.4MM PRINT)	St
	MP.0018	1.862.615.02		NIETMUTTER M3 X 19.7 (XLR/2.4MM PRINT)	St
	MP.0019	1.862.615.02		NIETMUTTER M3 X 19.7 (XLR/2.4MM PRINT)	St
	MP.0020	1.862.615.02		NIETMUTTER M3 X 19.7 (XLR/2.4MM PRINT)	St
	MP.0021	1.862.615.02		NIETMUTTER M3 X 19.7 (XLR/2.4MM PRINT)	St
	MP.0022	1.862.615.02		NIETMUTTER M3 X 19.7 (XLR/2.4mm PRINT)	St
	MP.0023	1.862.615.02		NIETMUTTER M3 X 19.7 (XLR/2.4mm PRINT)	St
	MP.0024	1.862.615.02		NIETMUTTER M3 X 19.7 (XLR/2.4MM PRINT)	St
	MP.0025	1.862.615.02		NIETMUTTER M3 X 19.7 (XLR/2.4MM PRINT)	St
	MP.0026	1.862.615.03		NIETMUTTER M3 X 20.5 (DSUB/2.4MM PRINT)	St
	MP.0027	1.862.615.03		NIETMUTTER M3 X 20.5 (DSUB/2.4MM PRINT)	St
	MP.0028	1.862.615.03		NIETMUTTER M3 X 20.5 (DSUB/2.4MM PRINT)	St
	MP.0029	1.862.615.03		NIETMUTTER M3 X 20.5 (DSUB/2.4MM PRINT)	St
	MP.0030	1.862.615.03		NIETMUTTER M3 X 20.5 (DSUB/2.4MM PRINT)	St
	MP.0031	1.862.615.03		NIETMUTTER M3 X 20.5 (DSUB/2.4MM PRINT)	St
	MP.0032	1.862.615.02		NIETMUTTER M3 X 19.7 (XLR/2.4MM PRINT)	St
	MP.0033	1.862.615.02		NIETMUTTER M3 X 19.7 (XLR/2.4MM PRINT)	St
	MP.0034	1.862.615.02		NIETMUTTER M3 X 19.7 (XLR/2.4MM PRINT)	St
	MP.0035	1.862.615.02		NIETMUTTER M3 X 19.7 (XLR/2.4MM PRINT)	St
	MP.0036	1.862.615.03		NIETMUTTER M3 X 20.5 (DSUB/2.4MM PRINT)	St
	MP.0037	1.862.615.03		NIETMUTTER M3 X 20.5 (DSUB/2.4MM PRINT)	St
	MP.0038	1.862.615.03		NIETMUTTER M3 X 20.5 (DSUB/2.4MM PRINT)	St
	MP.0039	1.862.615.03		NIETMUTTER M3 X 20.5 (DSUB/2.4MM PRINT)	St
	MP.0040	1.862.615.03		NIETMUTTER M3 X 20.5 (DSUB/2.4MM PRINT)	St

IND.	POS.NO.	PART NO.	VALUE	SPECIFICATIONS / EQUIVALENT	MANUF.
	MP.0041	1.862.615.03		NIETMUTTER M3 X 20.5 (DSUB/2.4MM PRINT)	St
	MP.0051	1.010.035.54		VERRIEGELUNGS-GEWINDEBOLZEN	St
	MP.0052	1.010.035.54		VERRIEGELUNGS-GEWINDEBOLZEN	St
	MP.0053	1.010.035.54		VERRIEGELUNGS-GEWINDEBOLZEN	St
	MP.0054	1.010.035.54		VERRIEGELUNGS-GEWINDEBOLZEN	St
	MP.0055	1.010.035.54		VERRIEGELUNGS-GEWINDEBOLZEN	St
	MP.0056	1.010.035.54		VERRIEGELUNGS-GEWINDEBOLZEN	St
	MP.0057	1.010.035.54		VERRIEGELUNGS-GEWINDEBOLZEN	St
	MP.0058	1.010.035.54		VERRIEGELUNGS-GEWINDEBOLZEN	St
	MP.0059	1.010.035.54		VERRIEGELUNGS-GEWINDEBOLZEN	St
	MP.0060	1.010.035.54		VERRIEGELUNGS-GEWINDEBOLZEN	St
	MP.0061	1.010.035.54		VERRIEGELUNGS-GEWINDEBOLZEN	St
	MP.0062	1.010.035.54		VERRIEGELUNGS-GEWINDEBOLZEN	St
	MP.0063	24.16.1030		SICHERUNGS-SCHEIBE	ANY
	MP.0064	24.16.1030		SICHERUNGS-SCHEIBE	ANY
	MP.0065	24.16.1030		SICHERUNGS-SCHEIBE	ANY
	MP.0066	24.16.1030		SICHERUNGS-SCHEIBE	ANY
	MP.0067	24.16.1030		SICHERUNGS-SCHEIBE	ANY
	MP.0068	24.16.1030		SICHERUNGS-SCHEIBE	ANY
	MP.0069	24.16.1030		SICHERUNGS-SCHEIBE	ANY
	MP.0070	24.16.1030		SICHERUNGS-SCHEIBE	ANY
	MP.0071	24.16.1030		SICHERUNGS-SCHEIBE	ANY
	MP.0072	24.16.1030		SICHERUNGS-SCHEIBE	ANY
	MP.0073	24.16.1030		SICHERUNGS-SCHEIBE	ANY
	MP.0074	24.16.1030		SICHERUNGS-SCHEIBE	ANY
(00)	MP.0101	1.862.615.11		MICONC PCB	St
(01)	MP.0101	1.862.615.12		MICONC PCB	St
	MP.0102	1.862.615.01		ETIK. PRINT.NR.	St
	MP.0103	1.010.105.91		ETIK. SICHERUNG T100mA	St
	MP.0111	20.99.0103		LIN. FORMSCHRAUBE D2/2 x 5 (XLR)	ANY
	MP.0112	20.99.0103		LIN. FORMSCHRAUBE D2/2 x 5 (XLR)	ANY
	MP.0113	20.99.0103		LIN. FORMSCHRAUBE D2/2 x 5 (XLR)	ANY
	MP.0114	20.99.0103		LIN. FORMSCHRAUBE D2/2 x 5 (XLR)	ANY
	MP.0115	20.99.0103		LIN. FORMSCHRAUBE D2/2 x 5 (XLR)	ANY
	MP.0116	20.99.0103		LIN. FORMSCHRAUBE D2/2 x 5 (XLR)	ANY
	MP.0117	20.99.0103		LIN. FORMSCHRAUBE D2/2 x 5 (XLR)	ANY
	MP.0118	20.99.0103		LIN. FORMSCHRAUBE D2/2 x 5 (XLR)	ANY

IND.	POS.NO.	PART NO.	VALUE	SPECIFICATIONS / EQUIVALENT	MANUF.
	MP.0119	20.99.0103		LIN. FORMSCHRAUBE D2/2 x 5 (XLR)	ANY
(00)	MP.0120	20.99.0103		LIN. FORMSCHRAUBE D2/6 X 8 (BNC)	ANY
(01)	MP.0120	20.24.7280		LIN. FORMSCHRAUBE D2/5 X 8 (BNC)	ANY
(00)	MP.0121	20.99.0103		LIN. FORMSCHRAUBE D2/6 X 8 (BNC)	ANY
(01)	MP.0121	20.24.7280		LIN. FORMSCHRAUBE D2/5 X 8 (BNC)	ANY
(00)	MP.0122	20.99.0103		LIN. FORMSCHRAUBE D2/6 X 8 (BNC)	ANY
(01)	MP.0122	20.24.7280		LIN. FORMSCHRAUBE D2/5 X 8 (BNC)	ANY
(00)	MP.0123	20.99.0103		LIN. FORMSCHRAUBE D2/6 X 8 (BNC)	ANY
(01)	MP.0123	20.24.7280		LIN. FORMSCHRAUBE D2/5 X 8 (BNC)	ANY
(00)	MP.0124	20.99.0103		LIN. FORMSCHRAUBE D2/6 X 8 (BNC)	ANY
(01)	MP.0124	20.24.7280		LIN. FORMSCHRAUBE D2/5 X 8 (BNC)	ANY
(00)	MP.0125	20.99.0103		LIN. FORMSCHRAUBE D2/6 X 8 (BNC)	ANY
(01)	MP.0125	20.24.7280		LIN. FORMSCHRAUBE D2/5 X 8 (BNC)	ANY
(00)	MP.0126	20.99.0103		LIN. FORMSCHRAUBE D2/6 X 8 (BNC)	ANY
(01)	MP.0126	20.24.7280		LIN. FORMSCHRAUBE D2/5 X 8 (BNC)	ANY
(00)	MP.0127	20.99.0103		LIN. FORMSCHRAUBE D2/6 X 8 (BNC)	ANY
(01)	MP.0127	20.24.7280		LIN. FORMSCHRAUBE D2/5 X 8 (BNC)	ANY
(00)	MP.0128	20.99.0103		LIN. FORMSCHRAUBE D2/6 X 8 (BNC)	ANY
(01)	MP.0128	20.24.7280		LIN. FORMSCHRAUBE D2/5 X 8 (BNC)	ANY
(00)	MP.0129	20.99.0103		LIN. FORMSCHRAUBE D2/6 X 8 (BNC)	ANY
(01)	MP.0129	20.24.7280		LIN. FORMSCHRAUBE D2/5 X 8 (BNC)	ANY
(00)	MP.0130	20.99.0103		LIN. FORMSCHRAUBE D2/6 X 8 (BNC)	ANY
(01)	MP.0130	20.24.7280		LIN. FORMSCHRAUBE D2/5 X 8 (BNC)	ANY
(00)	MP.0131	20.99.0103		LIN. FORMSCHRAUBE D2/6 X 8 (BNC)	ANY
(01)	MP.0131	20.24.7280		LIN. FORMSCHRAUBE D2/5 X 8 (BNC)	ANY
(00)	MP.0132	20.99.0103		LIN. FORMSCHRAUBE D2/6 X 8 (BNC)	ANY
(01)	MP.0132	20.24.7280		LIN. FORMSCHRAUBE D2/5 X 8 (BNC)	ANY
(00)	MP.0133	20.99.0103		LIN. FORMSCHRAUBE D2/6 X 8 (BNC)	ANY
(01)	MP.0133	20.24.7280		LIN. FORMSCHRAUBE D2/5 X 8 (BNC)	ANY
(00)	MP.0134	20.99.0103		LIN. FORMSCHRAUBE D2/6 X 8 (BNC)	ANY
(01)	MP.0134	20.24.7280		LIN. FORMSCHRAUBE D2/5 X 8 (BNC)	ANY
(00)	MP.0135	20.99.0103		LIN. FORMSCHRAUBE D2/6 X 8 (BNC)	ANY
(01)	MP.0135	20.24.7280		LIN. FORMSCHRAUBE D2/5 X 8 (BNC)	ANY
(00)	MP.0136	20.99.0103		LIN. FORMSCHRAUBE D2/6 X 8 (BNC)	ANY
(01)	MP.0136	20.24.7280		LIN. FORMSCHRAUBE D2/5 X 8 (BNC)	ANY
(00)	MP.0137	20.99.0103		LIN. FORMSCHRAUBE D2/6 X 8 (BNC)	ANY
(01)	MP.0137	20.24.7280		LIN. FORMSCHRAUBE D2/5 X 8 (BNC)	ANY

IND.	POS.NO.	PART NO.	VALUE	SPECIFICATIONS / EQUIVALENT	MANUF.
(00)	MP.0138	20.99.0103		LIN. FORMSCHRAUBE D2/6 X 8 (BNC)	ANY
(01)	MP.0138	20.24.7280		LIN. FORMSCHRAUBE D2/5 X 8 (BNC)	ANY
(00)	MP.0139	20.99.0103		LIN. FORMSCHRAUBE D2/6 X 8 (BNC)	ANY
(01)	MP.0139	20.24.7280		LIN. FORMSCHRAUBE D2/5 X 8 (BNC)	ANY
(00)	MP.0140	20.99.0103		LIN. FORMSCHRAUBE D2/6 X 8 (BNC)	ANY
(01)	MP.0140	20.24.7280		LIN. FORMSCHRAUBE D2/5 X 8 (BNC)	ANY
(00)	MP.0141	20.99.0103		LIN. FORMSCHRAUBE D2/6 X 8 (BNC)	ANY
(01)	MP.0141	20.24.7280		LIN. FORMSCHRAUBE D2/5 X 8 (BNC)	ANY
(00)	MP.0142	20.99.0103		LIN. FORMSCHRAUBE D2/6 X 8 (BNC)	ANY
(01)	MP.0142	20.24.7280		LIN. FORMSCHRAUBE D2/5 X 8 (BNC)	ANY
(00)	MP.0143	20.99.0103		LIN. FORMSCHRAUBE D2/6 X 8 (BNC)	ANY
(01)	MP.0143	20.24.7280		LIN. FORMSCHRAUBE D2/5 X 8 (BNC)	ANY
(00)	MP.0144	20.99.0103		LIN. FORMSCHRAUBE D2/6 X 8 (BNC)	ANY
(01)	MP.0144	20.24.7280		LIN. FORMSCHRAUBE D2/5 X 8 (BNC)	ANY
(00)	MP.0145	20.99.0103		LIN. FORMSCHRAUBE D2/6 X 8 (BNC)	ANY
(01)	MP.0145	20.24.7280		LIN. FORMSCHRAUBE D2/5 X 8 (BNC)	ANY
(00)	MP.0146	20.99.0103		LIN. FORMSCHRAUBE D2/6 X 8 (BNC)	ANY
(01)	MP.0146	20.24.7280		LIN. FORMSCHRAUBE D2/5 X 8 (BNC)	ANY
(00)	MP.0147	20.99.0103		LIN. FORMSCHRAUBE D2/6 X 8 (BNC)	ANY
(01)	MP.0147	20.24.7280		LIN. FORMSCHRAUBE D2/5 X 8 (BNC)	ANY
(00)	MP.0148	20.99.0103		LIN. FORMSCHRAUBE D2/6 X 8 (BNC)	ANY
(01)	MP.0148	20.24.7280		LIN. FORMSCHRAUBE D2/5 X 8 (BNC)	ANY
(00)	MP.0149	20.99.0103		LIN. FORMSCHRAUBE D2/6 X 8 (BNC)	ANY
(01)	MP.0149	20.24.7280		LIN. FORMSCHRAUBE D2/5 X 8 (BNC)	ANY
(00)	MP.0150	20.99.0103		LIN. FORMSCHRAUBE D2/6 X 8 (BNC)	ANY
(01)	MP.0150	20.24.7280		LIN. FORMSCHRAUBE D2/5 X 8 (BNC)	ANY
(00)	MP.0151	20.99.0103		LIN. FORMSCHRAUBE D2/6 X 8 (BNC)	ANY
(01)	MP.0151	20.24.7280		LIN. FORMSCHRAUBE D2/5 X 8 (BNC)	ANY
	P..0001	54.14.4010		ACTION PIN 10P. SN, GERADE	AMP
	P..0002	54.14.4010		ACTION PIN 10P. SN, GERADE	AMP
	P..0003	54.14.4016		ACTION PIN 16P. SN, GERADE	AMP
	P..0004	54.14.4016		ACTION PIN 16P. SN, GERADE	AMP
	P..0005	54.14.4010		ACTION PIN 10P. SN, GERADE	AMP
	P..0006	54.14.4010		ACTION PIN 10P. SN, GERADE	AMP
	P..0007	54.14.4010		ACTION PIN 10P. SN, GERADE	AMP
	P..0008	54.14.4010		ACTION PIN 10P. SN, GERADE	AMP

IND.	POS.NO.	PART NO.	VALUE	SPECIFICATIONS / EQUIVALENT	MANUF.
	P..0101	54.21.2001		3 POL M CHASSIS/PRINT XLR	ANY
	P..0102	54.21.2001		3 POL M CHASSIS/PRINT XLR	ANY
	P..0103	54.21.2001		3 POL M CHASSIS/PRINT XLR	ANY
	P..0104	54.21.2001		3 POL M CHASSIS/PRINT XLR	ANY
	P..0105	54.21.2001		3 POL M CHASSIS/PRINT XLR	ANY
	XF.0001	53.03.0116		SICHERUNGSHALTER STEHEND	ANY
	XW.0001	53.05.0147		POWER TERMINAL ACTION PIN	AMP
	XW.0002	53.05.0147		POWER TERMINAL ACTION PIN	AMP

REMARKS:
01: Print -12/ Formschraube MP 120-152

MANUFACTURERS:
ST = STUDER, PH = PHILIPS,

ABBREVIATIONS:

ORIG 89/06/20 (01) 90/04/02

BLOCK DIAGRAM A/D CONVERTER WITH TRAFO

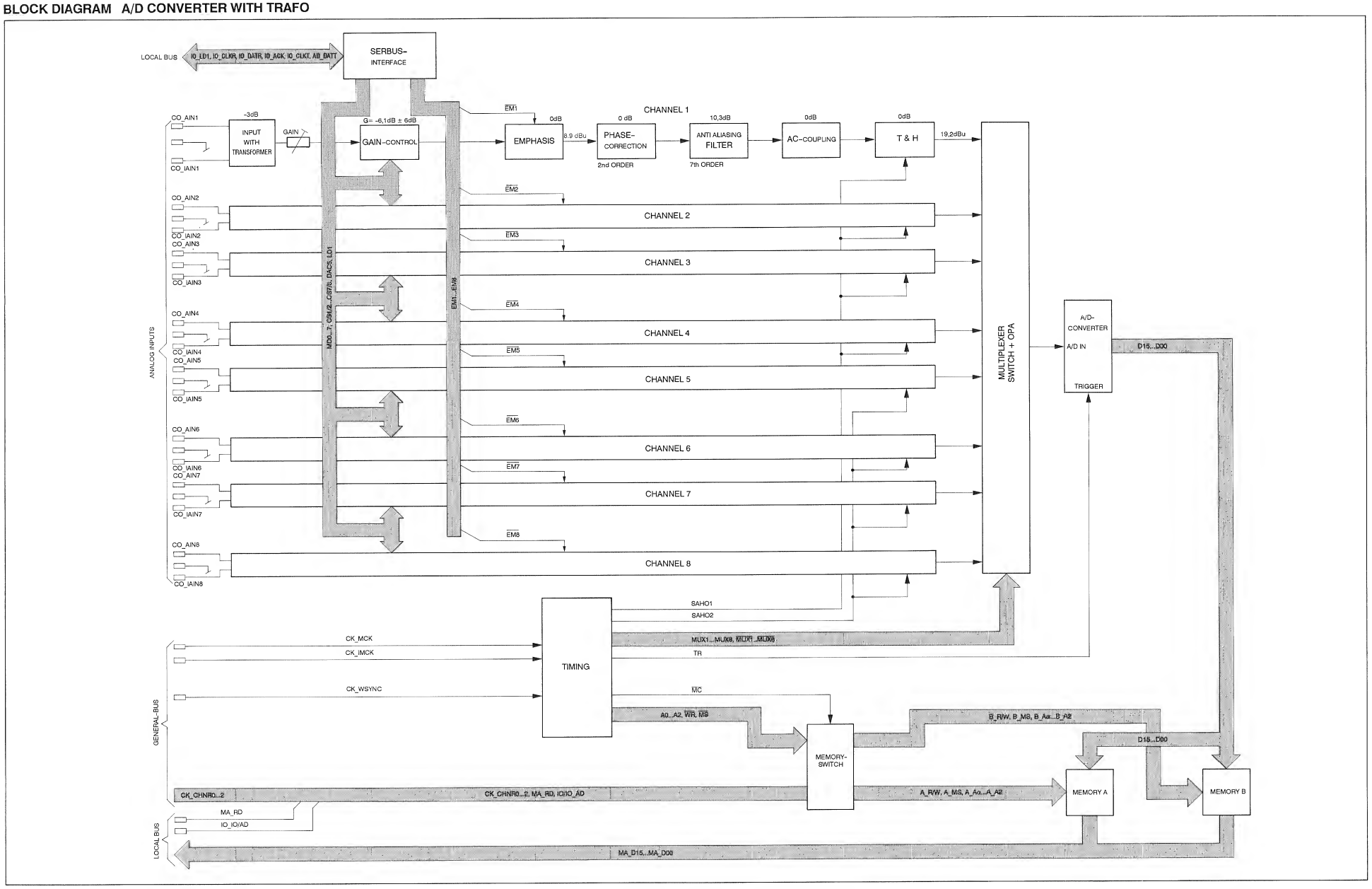

A/D CONVERTER WITH TRAFO 1.862.650.20

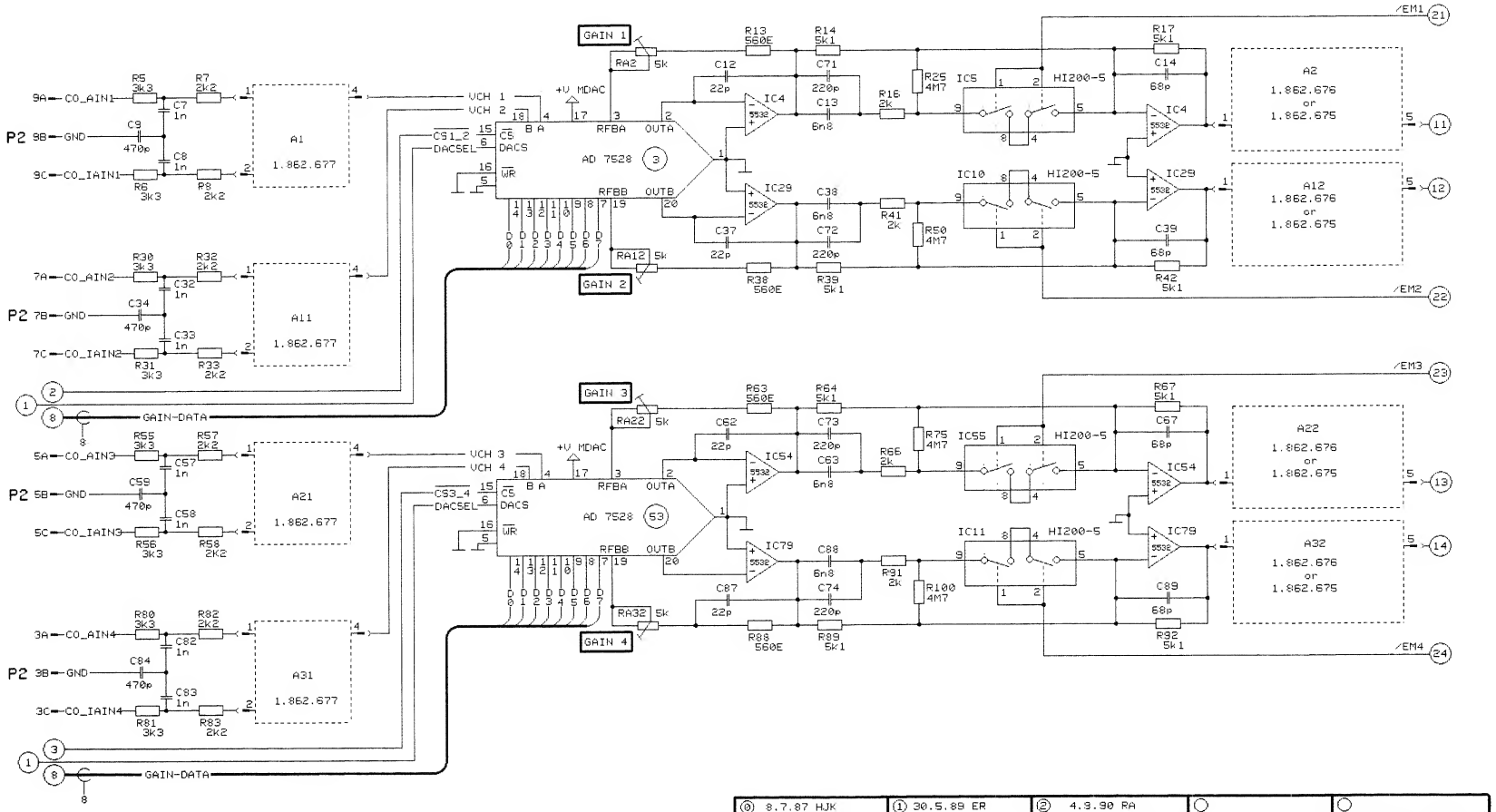

⓪ 8.7.87 HJK	① 30.5.89 ER	② 4.9.90 RA		
	D820 MCH			PAGE 1 OF 7
STUDER	ANA/DIG CONVERTER		SC	1.862.650.20

A/D CONVERTER WITH TRAFO 1.862.650.20

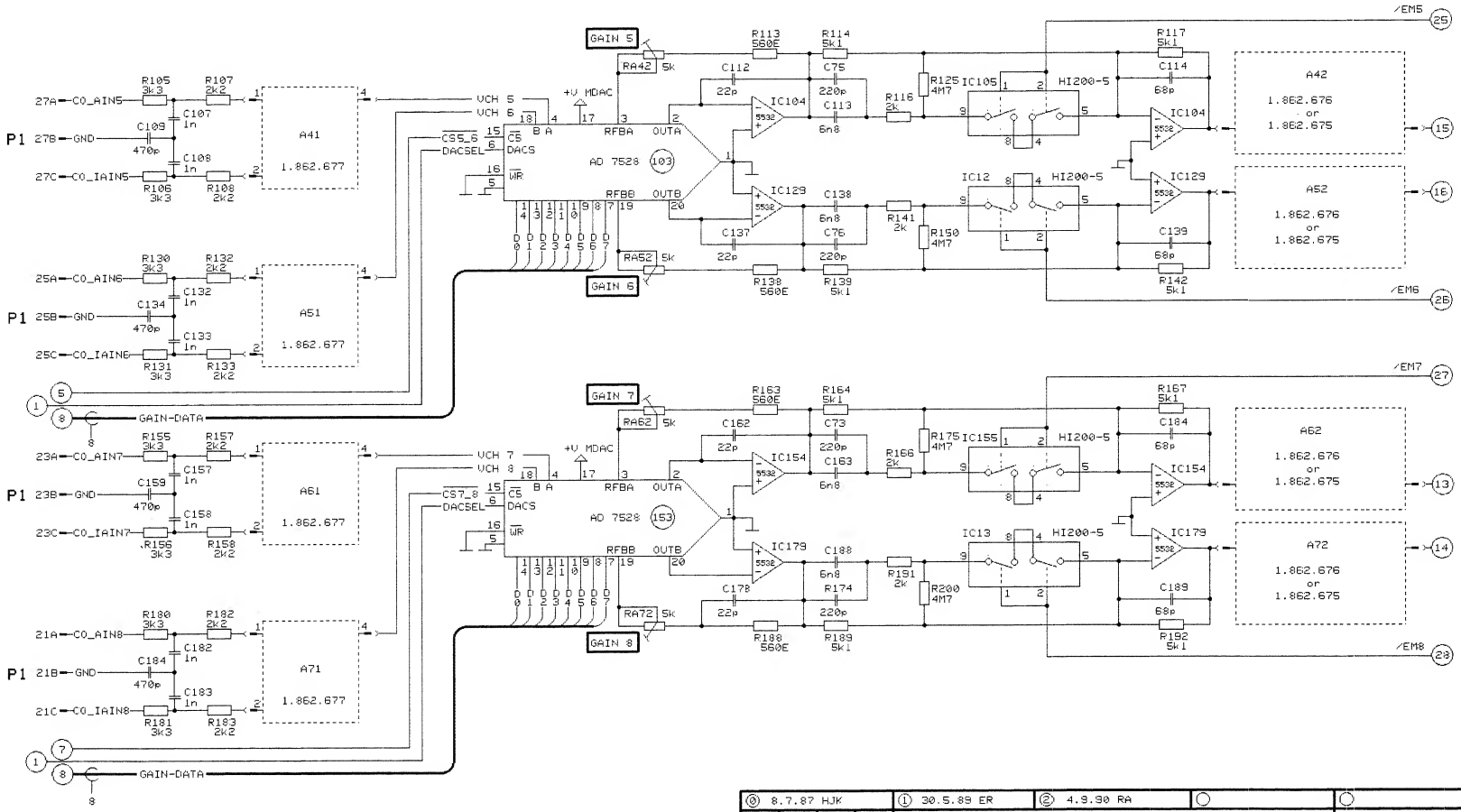

⓪ 8.7.87 HJK	① 30.5.89 ER	② 4.9.90 RA		
	D820 MCH			PAGE 2 OF 7
STUDER	ANA/DIG CONVERTER		SC	1.862.650.20

A/D CONVERTER WITH TRAFO 1.862.650.20

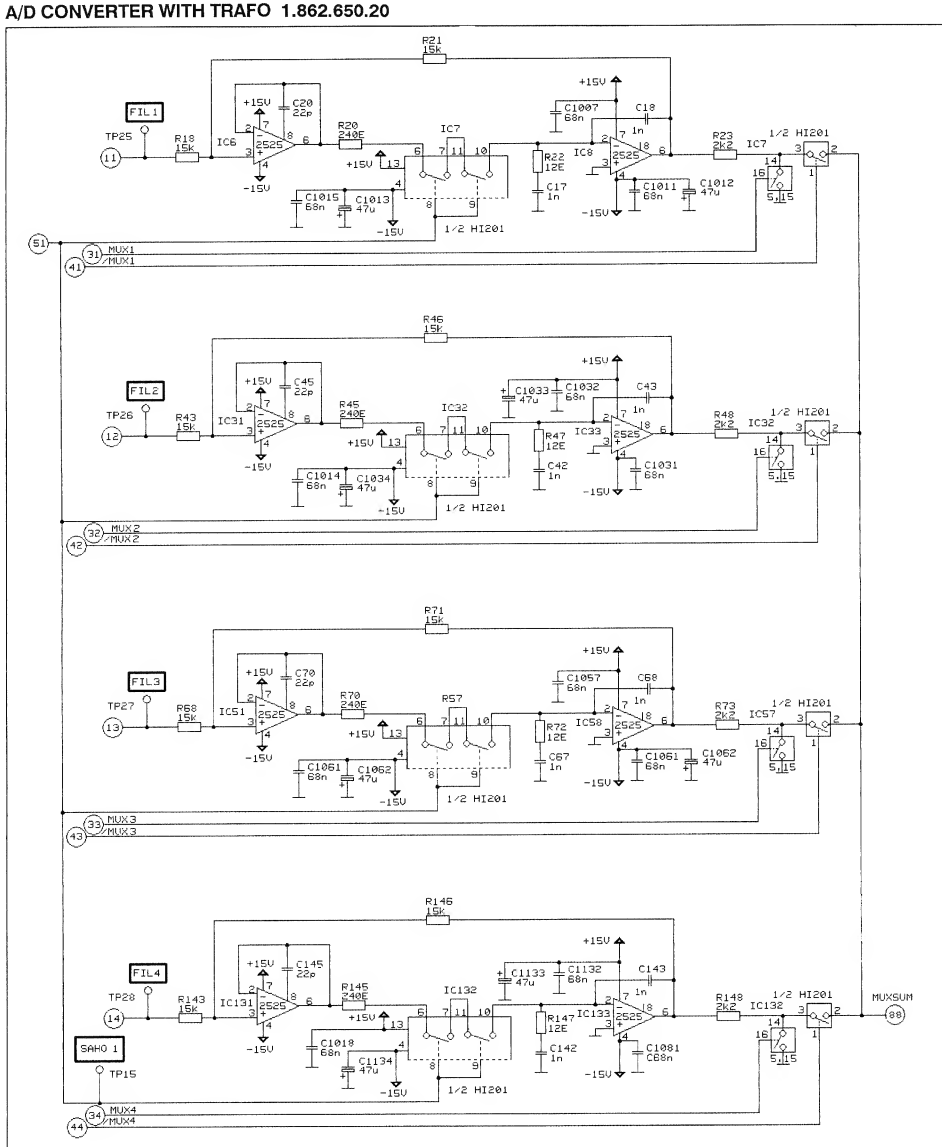

⓪ 8.7.87 HJK	① 30.5.89 ER	② 4.9.90 RA	○
STUDER	D820 MCH	PAGE 3 OF 7	
	ANA/DIG CONVERTER	SC	1.862.650.20

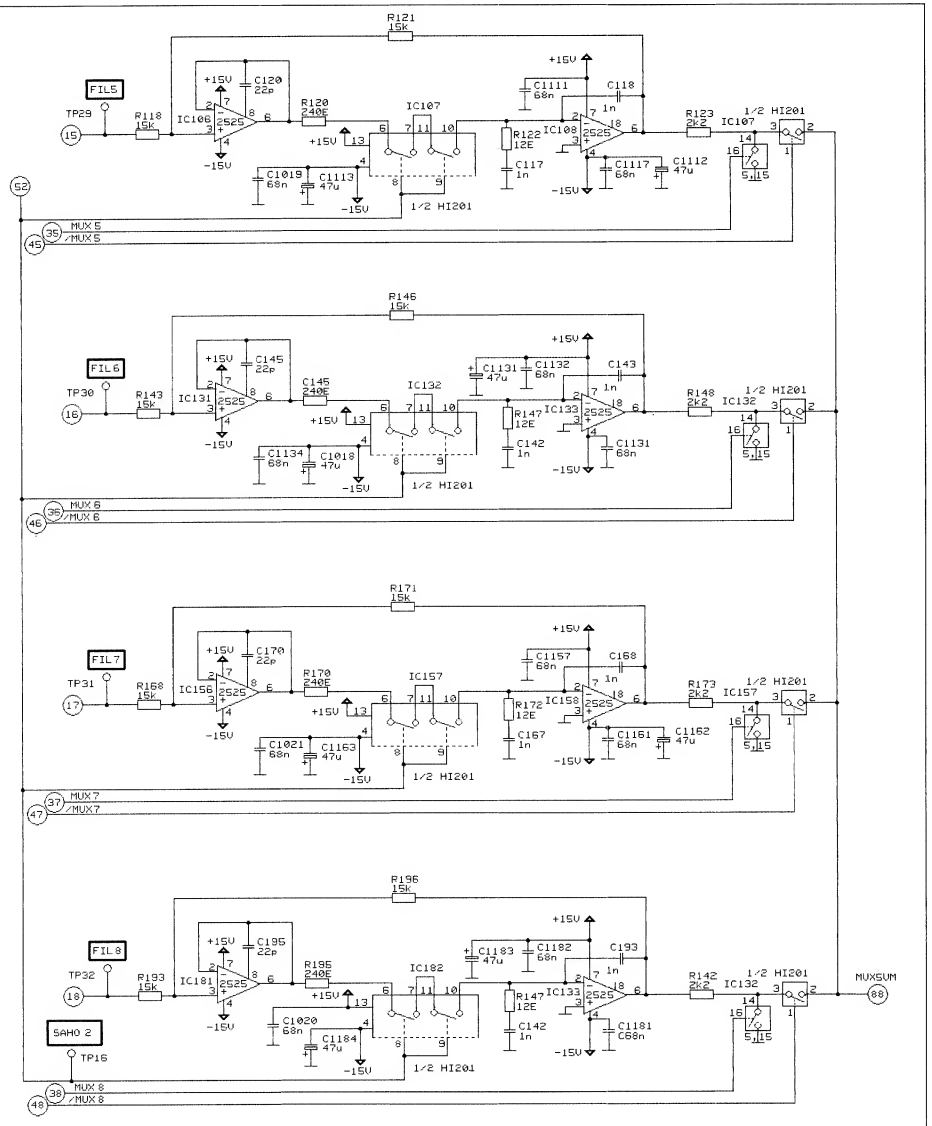

⓪ 8.7.87 HJK	① 30.5.89 ER	② 4.9.90 RA	○
STUDER	D820 MCH	PAGE 4 OF 7	
	ANA/DIG CONVERTER	SC	1.862.650.20

A/D CONVERTER WITH TRAFO 1.862.650.20

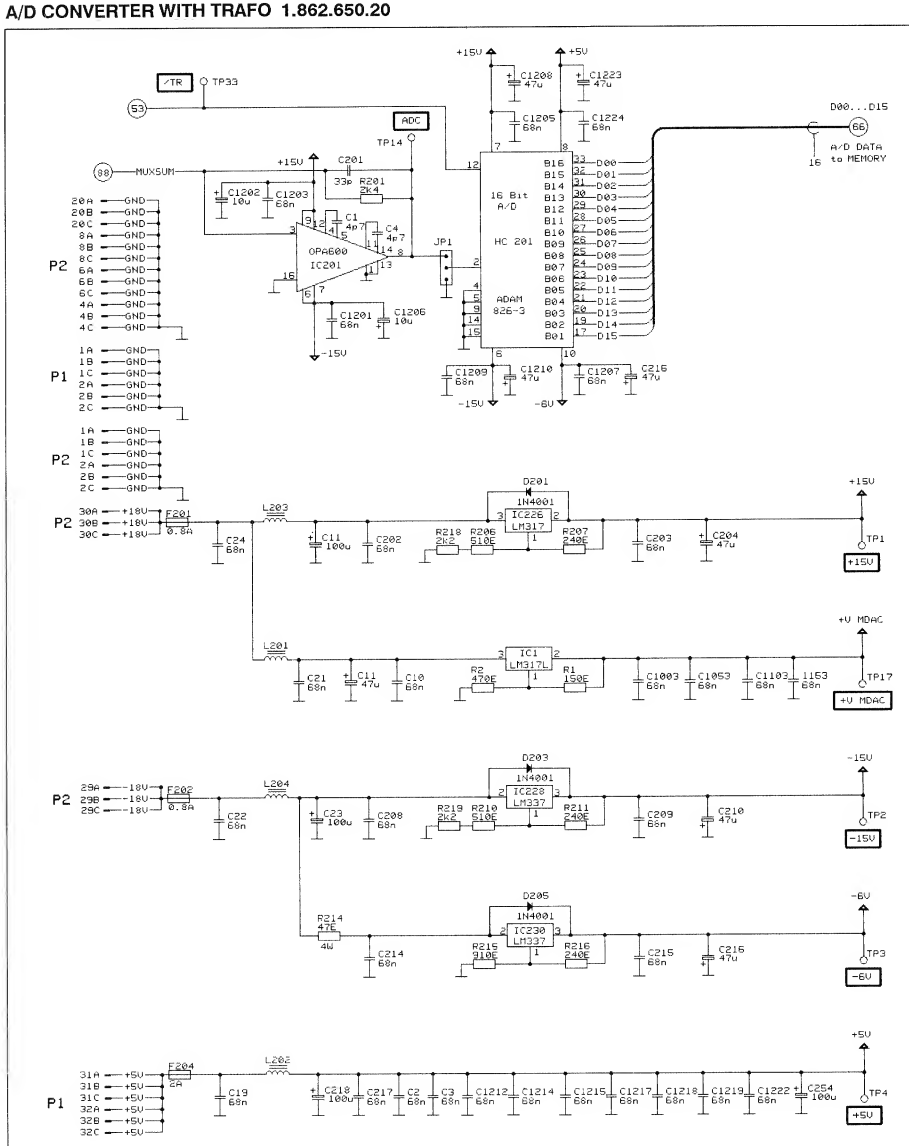

⓪ 8.7.87 HJK	① 6.6.89 ER	② 4.9.90 RA	
	D820 MCH		PAGE 5 OF 7
STUDER	ANA/DIG CONVERTER	SC	1.862.650.20

⓪ 8.7.87 HJK	① 15.8.88. ER	② 4.9.90 RA	
	D820 MCH		PAGE 6 OF 7
STUDER	ANA/DIG CONVERTER	SC	1.862.650.20

A/D CONVERTER WITH TRAFO 1.862.650.20

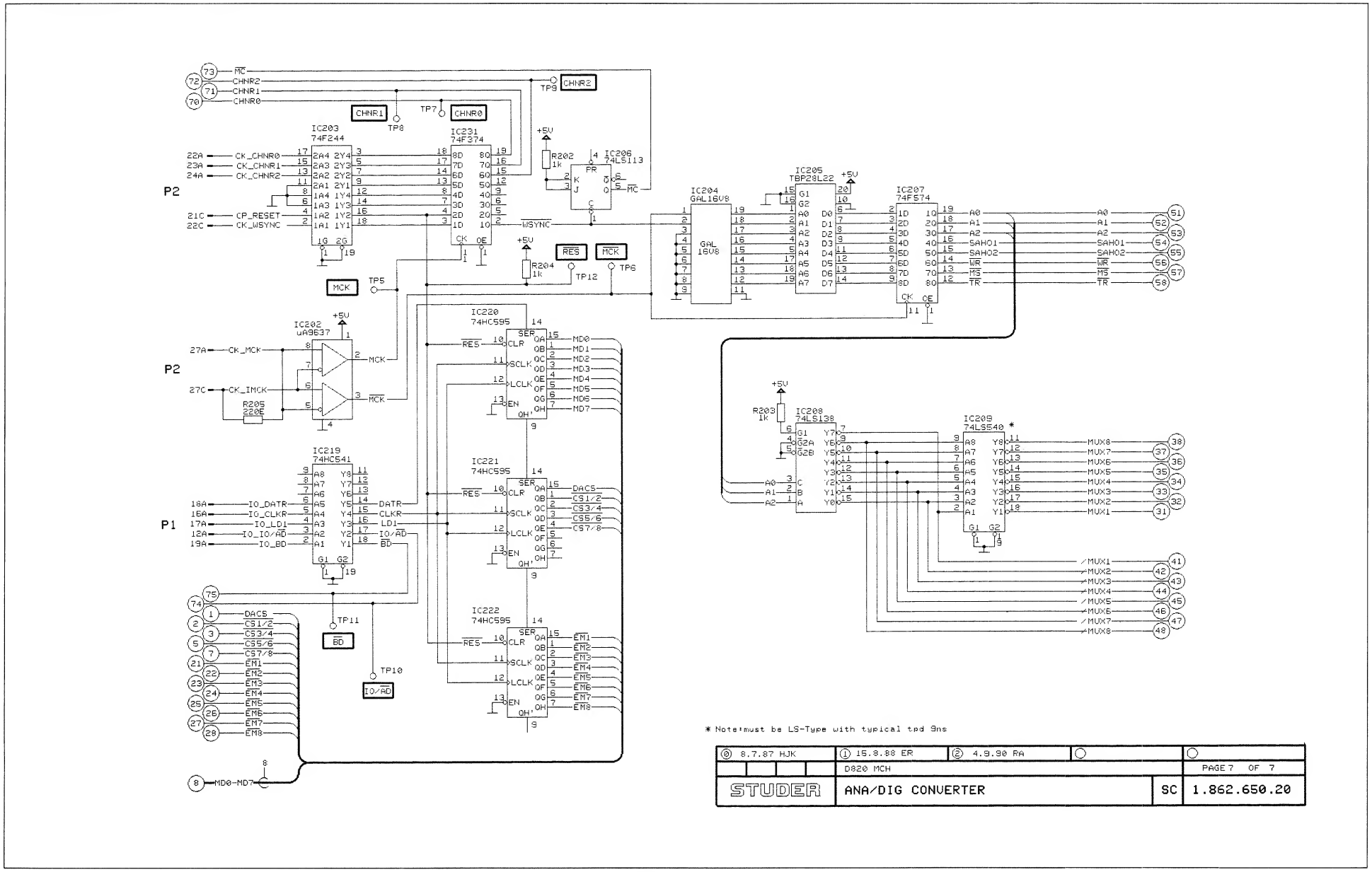

A/D CONVERTER WITH TRAFO 1.862.650.20

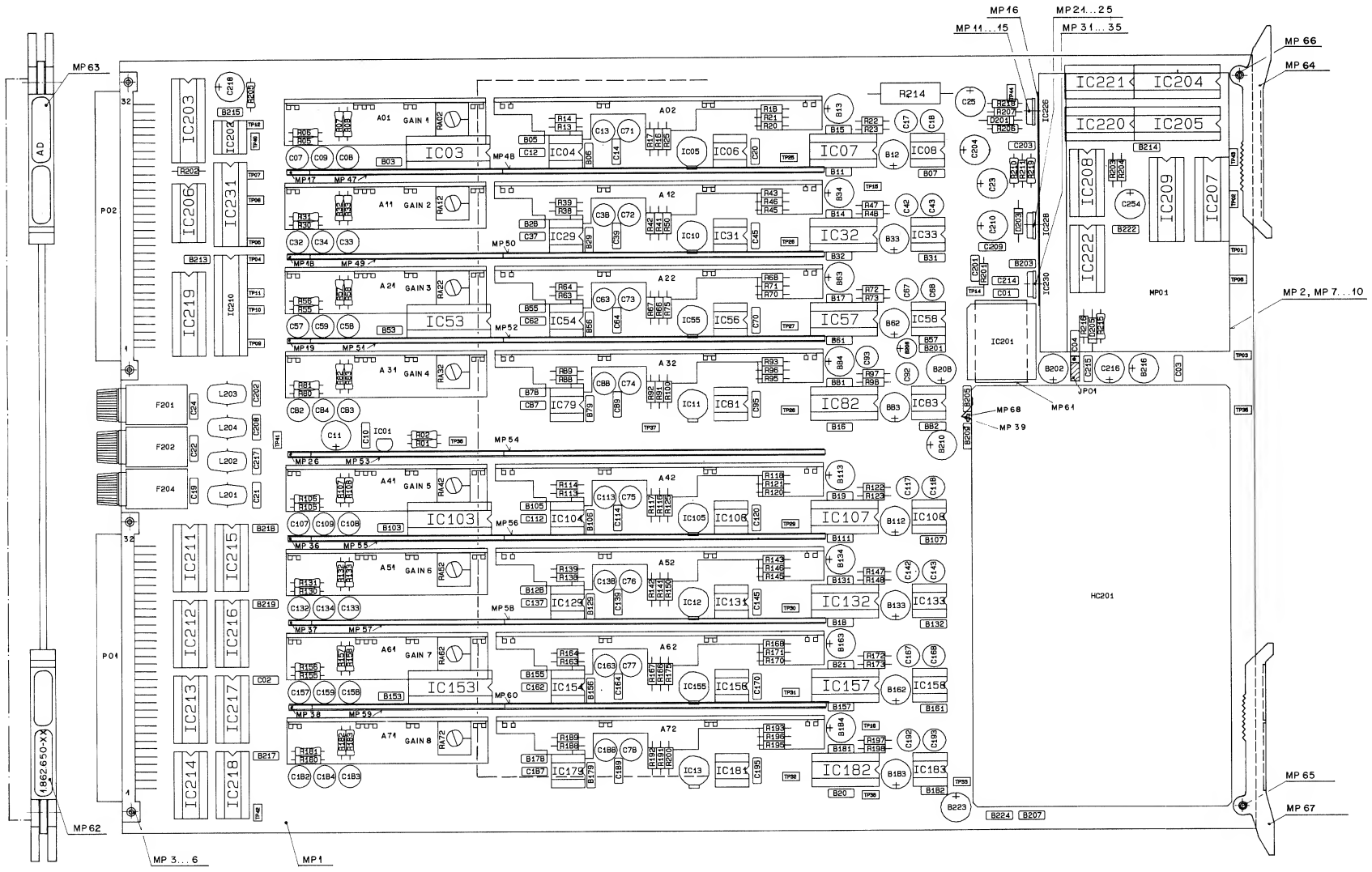

Schilder MP 40...45
aufgeklebt nach Fabrikationsmuster.

IC Sockel nach PL bestückt
z.B. XIC 03 = Sockel von IC03

A/D CONVERTER WITH TRAFO 1.862.650.20

IND.	POS.NO.	PART NO.	VALUE	SPECIFICATIONS / EQUIVALENT	MANUF.
	A.....1	1.862.677.00		BACKBAG A/D, INPUT MODULE	St
(00)	A.....2	1.862.676.00		BACKBAG A/D, ANTI ALIASING FILTER	St
(06)	A.....2	1.862.676.81		BACKBAG A/D, ANTI ALIASING FILTER	St
	A....11	1.862.677.00		BACKBAG A/D, INPUT MODULE	St
(00)	A....12	1.862.676.00		BACKBAG A/D, ANTI ALIASING FILTER	St
(06)	A....12	1.862.676.81		BACKBAG A/D, ANTI ALIASING FILTER	St
	A....21	1.862.677.00		BACKBAG A/D, INPUT MODULE	St
(00)	A....22	1.862.676.00		BACKBAG A/D, ANTI ALIASING FILTER	St
(06)	A....22	1.862.676.81		BACKBAG A/D, ANTI ALIASING FILTER	St
	A....31	1.862.677.00		BACKBAG A/D, INPUT MODULE	St
(00)	A....32	1.862.676.00		BACKBAG A/D, ANTI ALIASING FILTER	St
(06)	A....32	1.862.676.81		BACKBAG A/D, ANTI ALIASING FILTER	St
	A....41	1.862.677.00		BACKBAG A/D, INPUT MODULE	St
(00)	A....42	1.862.676.00		BACKBAG A/D, ANTI ALIASING FILTER	St
(06)	A....42	1.862.676.81		BACKBAG A/D, ANTI ALIASING FILTER	St
	A....51	1.862.677.00		BACKBAG A/D, INPUT MODULE	St
(00)	A....52	1.862.676.00		BACKBAG A/D, ANTI ALIASING FILTER	St
(06)	A....52	1.862.676.81		BACKBAG A/D, ANTI ALIASING FILTER	St
	A....61	1.862.677.00		BACKBAG A/D, INPUT MODULE	St
(00)	A....62	1.862.676.00		BACKBAG A/D, ANTI ALIASING FILTER	St
(06)	A....62	1.862.676.81		BACKBAG A/D, ANTI ALIASING FILTER	St
	A....71	1.862.677.00		BACKBAG A/D, INPUT MODULE	St
(00)	A....72	1.862.676.00		BACKBAG A/D, ANTI ALIASING FILTER	St
(06)	A....72	1.862.676.81		BACKBAG A/D, ANTI ALIASING FILTER	St
	C.....1	59.34.0479	4.7 p	20%, 50V, CER	ANY
	C.....2	59.06.0683	68 n	20%, 50V, CER	ANY
	C.....3	59.06.0683	68 n	20%, 50V, CER	ANY
	C.....4	59.34.0479	4.7 p	20%, 50V, CER	ANY
	C.....7	59.05.2102	1 n	2.5%, 160V, PP	ANY
	C.....8	59.05.2102	1 n	2.5%, 160V, PP	ANY
	C.....9	59.05.2471	470 p	2.5%, 160V, PP	ANY
	C....10	59.06.0683	68 n	20%, 50V, CER	ANY
	C....11	59.22.5470	47 u	20%, 16V, EL	ANY
	C....12	59.34.2220	22 p	20%, 50V, CER	ANY
	C....13	59.05.1682	6.8 n	1%, 50V, PP	ANY
	C....14	59.34.4680	68 p	20%, 50V, CER	ANY

STUDER (06) 90/08/10 LAR 8CH A/D CONVERTER PL 1.862.650.20 PAGE 1

IND.	POS.NO.	PART NO.	VALUE	SPECIFICATIONS / EQUIVALENT	MANUF.
	C....17	59.05.1102	1 n	1%, 160V, PP	ANY
	C....18	59.05.1102	1 n	1%, 160V, PP	ANY
	C....19	59.06.0683	68 n	20%, 50V, CER	ANY
	C....20	59.34.2220	22 p	20%, 50V, CER	ANY
	C....21	59.06.0683	68 n	20%, 50V, CER	ANY
	C....22	59.06.0683	68 n	20%, 50V, CER	ANY
	C....23	59.22.5101	100 u	20%, 25V, EL	ANY
	C....24	59.06.0683	68 n	20%, 50V, CER	ANY
	C....25	59.22.5101	100 u	20%, 25V, EL	ANY
	C....32	59.05.2102	1 n	2.5%, 160V, PP	ANY
	C....33	59.05.2102	1 n	2.5%, 160V, PP	ANY
	C....34	59.05.2471	470 p	2.5%, 160V, PP	ANY
	C....37	59.34.2220	22 p	20%, 50V, CER	ANY
	C....38	59.05.1682	6.8 n	1%, 50V, PP	ANY
	C....39	59.34.4680	68 p	20%, 50V, CER	ANY
	C....42	59.05.1102	1 n	1%, 160V, PP	ANY
	C....43	59.05.1102	1 n	1%, 160V, PP	ANY
	C....45	59.34.2220	22 p	20%, 50V, CER	ANY
	C....57	59.05.2102	1 n	2.5%, 160V, PP	ANY
	C....58	59.05.2102	1 n	2.5%, 160V, PP	ANY
	C....59	59.05.2471	470 p	2.5%, 160V, PP	ANY
	C....62	59.34.2220	22 p	20%, 50V, CER	ANY
	C....63	59.05.1682	6.8 n	1%, 50V, PP	ANY
	C....64	59.34.4680	68 p	20%, 50V, CER	ANY
	C....67	59.05.1102	1 n	1%, 160V, PP	ANY
	C....68	59.05.1102	1 n	1%, 160V, PP	ANY
	C....70	59.34.2220	22 p	20%, 50V, CER	ANY
	C....71	59.05.2221	220 p	2.5%, 50V, PP	ANY
	C....72	59.05.2221	220 p	2.5%, 50V, PP	ANY
	C....73	59.05.2221	220 p	2.5%, 50V, PP	ANY
	C....74	59.05.2221	220 p	2.5%, 50V, PP	ANY
	C....75	59.05.2221	220 p	2.5%, 50V, PP	ANY
	C....76	59.05.2221	220 p	2.5%, 50V, PP	ANY
	C....77	59.05.2221	220 p	2.5%, 50V, PP	ANY
	C....78	59.05.2221	220 p	2.5%, 50V, PP	ANY
	C....82	59.05.2102	1 n	2.5%, 160V, PP	ANY
	C....83	59.05.2102	1 n	2.5%, 160V, PP	ANY

STUDER (06) 90/08/10 LAR 8CH A/D CONVERTER PL 1.862.650.20 PAGE 2

IND.	POS.NO.	PART NO.	VALUE	SPECIFICATIONS / EQUIVALENT	MANUF.
	C....84	59.05.2471	470 p	2.5%, 160V, PP	ANY
	C....87	59.34.2220	22 p	20%, 50V, CER	ANY
	C....88	59.05.1682	6.8 n	1%, 50V, PP	ANY
	C....89	59.34.4680	68 p	20%, 50V, CER	ANY
	C....92	59.05.1102	1 n	1%, 160V, PP	ANY
	C....93	59.05.1102	1 n	1%, 160V, PP	ANY
	C....95	59.34.2220	22 p	20%, 50V, CER	ANY
	C...107	59.05.2102	1 n	2.5%, 160V, PP	ANY
	C...108	59.05.2102	1 n	2.5%, 160V, PP	ANY
	C...109	59.05.2471	470 p	2.5%, 160V, PP	ANY
	C...112	59.34.2220	22 p	20%, 50V, CER	ANY
	C...113	59.05.1682	6.8 n	1%, 50V, PP	ANY
	C...114	59.34.4680	68 p	20%, 50V, CER	ANY
	C...117	59.05.1102	1 n	1%, 160V, PP	ANY
	C...118	59.05.1102	1 n	1%, 160V, PP	ANY
	C...120	59.34.2220	22 p	20%, 50V, CER	ANY
	C...132	59.05.2102	1 n	2.5%, 160V, PP	ANY
	C...133	59.05.2102	1 n	2.5%, 160V, PP	ANY
	C...134	59.05.2471	470 p	2.5%, 160V, PP	ANY
	C...137	59.34.2220	22 p	20%, 50V, CER	ANY
	C...138	59.05.1682	6.8 n	1%, 50V, PP	ANY
	C...139	59.34.4680	68 p	20%, 50V, CER	ANY
	C...142	59.05.1102	1 n	1%, 160V, PP	ANY
	C...143	59.05.1102	1 n	1%, 160V, PP	ANY
	C...145	59.34.2220	22 p	20%, 50V, CER	ANY
	C...157	59.05.2102	1 n	2.5%, 160V, PP	ANY
	C...158	59.05.2102	1 n	2.5%, 160V, PP	ANY
	C...159	59.05.2471	470 p	2.5%, 160V, PP	ANY
	C...162	59.34.2220	22 p	20%, 50V, CER	ANY
	C...163	59.05.1682	6.8 n	1%, 50V, PP	ANY
	C...164	59.34.4680	68 p	20%, 50V, CER	ANY
	C...167	59.05.1102	1 n	1%, 160V, PP	ANY
	C...168	59.05.1102	1 n	1%, 160V, PP	ANY
	C...170	59.34.2220	22 p	20%, 50V, CER	ANY
	C...182	59.05.2102	1 n	2.5%, 160V, PP	ANY
	C...183	59.05.2102	1 n	2.5%, 160V, PP	ANY
	C...184	59.05.2471	470 p	2.5%, 160V, PP	ANY

STUDER (06) 90/08/10 LAR 8CH A/D CONVERTER PL 1.862.650.20 PAGE 3

IND.	POS.NO.	PART NO.	VALUE	SPECIFICATIONS / EQUIVALENT	MANUF.
	C...187	59.34.2220	22 p	20%, 50V, CER	ANY
	C...188	59.05.1682	6.8 n	1%, 50V, PP	ANY
	C...189	59.34.4680	68 p	20%, 50V, CER	ANY
	C...192	59.05.1102	1 n	1%, 160V, PP	ANY
	C...193	59.05.1102	1 n	1%, 160V, PP	ANY
	C...195	59.34.2220	22 p	20%, 50V, CER	ANY
	C...201	59.34.2330	33 P	20%, 50V, CER	ANY
	C...202	59.06.0683	68 n	20%, 50V, CER	ANY
	C...203	59.06.0683	68 n	20%, 50V, CER	ANY
	C...204	59.22.5470	47 u	20%, 25V, EL	ANY
	C...208	59.06.0683	68 n	20%, 50V, CER	ANY
	C...209	59.06.0683	68 n	20%, 50V, CER	ANY
	C...210	59.22.5470	47 u	20%, 25V, EL	ANY
	C...214	59.06.0683	68 n	20%, 50V, CER	ANY
	C...215	59.06.0683	68 n	20%, 50V, CER	ANY
	C...216	59.22.5101	100 u	20%, 25V, EL	ANY
	C...217	59.06.0683	68 n	20%, 50V, CER	ANY
	C...218	59.22.5101	100 u	20%, 25V, EL	ANY
	C...254	59.22.5101	100 u	20%, 25V, EL	ANY
	C..1003	59.06.0683	68 n	20%, 50V, CER	ANY
	C..1005	59.06.0683	68 n	20%, 50V, CER	ANY
	C..1006	59.06.0683	68 n	20%, 50V, CER	ANY
	C..1007	59.06.0683	68 n	20%, 50V, CER	ANY
	C..1011	59.06.0683	68 n	20%, 50V, CER	ANY
	C..1012	59.22.5470	47 u	20%, 25V, EL	ANY
	C..1013	59.22.5470	47 u	20%, 25V, EL	ANY
	C..1014	59.06.0683	68 n	20%, 50V, CER	ANY
	C..1015	59.06.0683	68 n	20%, 50V, CER	ANY
	C..1016	59.06.0683	68 n	20%, 50V, CER	ANY
	C..1017	59.06.0683	68 n	20%, 50V, CER	ANY
	C..1018	59.06.0683	68 n	20%, 50V, CER	ANY
	C..1019	59.06.0683	68 n	20%, 50V, CER	ANY
	C..1020	59.06.0683	68 n	20%, 50V, CER	ANY
	C..1021	59.06.0683	68 n	20%, 50V, CER	ANY
	C..1028	59.06.0683	68 n	20%, 50V, CER	ANY
	C..1029	59.06.0683	68 n	20%, 50V, CER	ANY
	C..1031	59.06.0683	68 n	20%, 50V, CER	ANY

STUDER (06) 90/08/10 LAR 8CH A/D CONVERTER PL 1.862.650.20 PAGE 4

IND.	POS.NO.	PART NO.	VALUE	SPECIFICATIONS / EQUIVALENT	MANUF.
	C..1032	59.06.0683	68 n	20%, 50V, CER	ANY
	C..1033	59.22.5470	47 u	20%, 25V, EL	ANY
	C..1034	59.22.5470	47 u	20%, 25V, EL	ANY
	C..1053	59.06.0683	68 n	20%, 50V, CER	ANY
	C..1055	59.06.0683	68 n	20%, 50V, CER	ANY
	C..1056	59.06.0683	68 n	20%, 50V, CER	ANY
	C..1057	59.06.0683	68 n	20%, 50V, CER	ANY
	C..1061	59.06.0683	68 n	20%, 50V, CER	ANY
	C..1062	59.22.5470	47 u	20%, 25V, EL	ANY
	C..1063	59.22.5470	47 u	20%, 25V, EL	ANY
	C..1078	59.06.0683	68 n	20%, 50V, CER	ANY
	C..1079	59.06.0683	68 n	20%, 50V, CER	ANY
	C..1081	59.06.0683	68 n	20%, 50V, CER	ANY
	C..1082	59.06.0683	68 n	20%, 50V, CER	ANY
	C..1083	59.22.5470	47 u	20%, 25V, EL	ANY
	C..1084	59.22.5470	47 u	20%, 25V, EL	ANY
	C..1103	59.06.0683	68 n	20%, 50V, CER	ANY
	C..1105	59.06.0683	68 n	20%, 50V, CER	ANY
	C..1106	59.06.0683	68 n	20%, 50V, CER	ANY
	C..1107	59.06.0683	68 n	20%, 50V, CER	ANY
	C..1111	59.06.0683	68 n	20%, 50V, CER	ANY
	C..1112	59.22.5470	47 u	20%, 25V, EL	ANY
	C..1113	59.22.5470	47 u	20%, 25V, EL	ANY
	C..1128	59.06.0683	68 n	20%, 50V, CER	ANY
	C..1129	59.06.0683	68 n	20%, 50V, CER	ANY
	C..1131	59.06.0683	68 n	20%, 50V, CER	ANY
	C..1132	59.06.0683	68 n	20%, 50V, CER	ANY
	C..1133	59.22.5470	47 u	20%, 25V, EL	ANY
	C..1134	59.22.5470	47 u	20%, 25V, EL	ANY
	C..1153	59.06.0683	68 n	20%, 50V, CER	ANY
	C..1155	59.06.0683	68 n	20%, 50V, CER	ANY
	C..1156	59.06.0683	68 n	20%, 50V, CER	ANY
	C..1157	59.06.0683	68 n	20%, 50V, CER	ANY
	C..1161	59.06.0683	68 n	20%, 50V, CER	ANY
	C..1162	59.22.5470	47 u	20%, 25V, EL	ANY
	C..1163	59.22.5470	47 u	20%, 25V, EL	ANY
	C..1178	59.06.0683	68 n	20%, 50V, CER	ANY

STUDER (06) 90/08/10 LAR 8CH A/D CONVERTER PL 1.862.650.20 PAGE 5

IND.	POS.NO.	PART NO.	VALUE	SPECIFICATIONS / EQUIVALENT	MANUF.
	C..1179	59.06.0683	68 n	20%, 50V, CER	ANY
	C..1181	59.06.0683	68 n	20%, 50V, CER	ANY
	C..1182	59.06.0683	68 n	20%, 50V, CER	ANY
	C..1183	59.22.5470	47 u	20%, 25V, EL	ANY
	C..1184	59.22.5470	47 u	20%, 25V, EL	ANY
	C..1201	59.06.0683	68 n	20%, 50V, CER	ANY
	C..1202	59.22.6100	10 u	20%, 25V, EL	ANY
	C..1203	59.06.0683	68 n	20%, 50V, CER	ANY
	C..1205	59.06.0683	68 n	20%, 50V, CER	ANY
	C..1206	59.22.6100	10 u	20%, 25V, EL	ANY
	C..1207	59.06.0683	68 n	20%, 50V, CER	ANY
	C..1208	59.22.5470	47 u	20%, 25V, EL	ANY
	C..1209	59.06.0683	68 n	20%, 50V, CER	ANY
	C..1210	59.22.5470	47 u	20%, 25V, EL	ANY
	C..1213	59.06.0683	68 n	20%, 50V, CER	ANY
	C..1214	59.06.0683	68 n	20%, 50V, CER	ANY
	C..1215	59.06.0683	68 n	20%, 50V, CER	ANY
	C..1216	59.22.5101	100 u	20%, 25V, EL	ANY
	C..1217	59.06.0683	68 n	20%, 50V, CER	ANY
	C..1218	59.06.0683	68 n	20%, 50V, CER	ANY
	C..1219	59.06.0683	68 n	20%, 50V, CER	ANY
	C..1222	59.06.0683	68 n	20%, 50V, CER	ANY
	C..1223	59.22.5470	47 u	20%, 25V, EL	ANY
	C..1224	59.06.0683	68 n	20%, 50V, CER	ANY
	D...201	50.04.0122		1N 4001	ANY
	D...203	50.04.0122		1N 4001	ANY
	D...205	50.04.0122		1N 4001	ANY
	F...201	51.01.0116		T800mA / 250V, 5 * 20mm	ANY
	F...202	51.01.0116		T800mA / 250V, 5 * 20mm	ANY
	F...204	51.01.0120		T2A / 250V, 5 * 20mm	ANY
	HC..201	1.010.105.50		A 826-3 ADAM	An
	IC....1	50.10.0108		LM317 LZ	ANY
	IC....3	50.07.0037		AD 7528 JN	Ad

STUDER (06) 90/08/10 LAR 8CH A/D CONVERTER PL 1.862.650.20 PAGE 6

IND.	POS.NO.	PART NO.	VALUE	SPECIFICATIONS / EQUIVALENT	MANUF.
	IC....4	50.09.0106		NE 5532 AN	ANY
	IC....5	50.99.0181		HI-200-5	ANY
	IC....6	50.09.0109		HA-2525-5	ANY
	IC....7	50.17.0101		HI 201 HS	Ad
	IC....8	50.09.0109		HA-2525-5	ANY
	IC...10	50.99.0181		HI-200-5	ANY
	IC...11	50.99.0181		HI-200-5	ANY
	IC...12	50.99.0181		HI-200-5	ANY
	IC...13	50.99.0181		HI-200-5	ANY
	IC...29	50.09.0106		NE 5532 AN	ANY
	IC...31	50.09.0109		HA-2525-5	ANY
	IC...32	50.17.0101		HI 201 HS	Ad
	IC...33	50.09.0109		HA-2525-5	ANY
	IC...53	50.07.0037		AD 7528 JN	Ad
	IC...54	50.09.0106		NE 5532 AN	ANY
	IC...55	50.99.0181		HI-200-5	ANY
	IC...56	50.09.0109		HA-2525-5	ANY
	IC...57	50.17.0101		HI 201 HS	Ad
	IC...58	50.09.0109		HA-2525-5	ANY
	IC...79	50.09.0106		NE 5532 AN	ANY
	IC...81	50.09.0109		HA-2525-5	ANY
	IC...82	50.17.0101		HI 201 HS	Ad
	IC...83	50.09.0109		HA-2525-5	ANY
	IC..103	50.07.0037		AD 7528 JN	Ad
	IC..104	50.09.0106		NE 5532 AN	ANY
	IC..105	50.99.0181		HI-200-5	ANY
	IC..106	50.09.0109		HA-2525-5	ANY
	IC..107	50.17.0101		HI 201 HS	Ad
	IC..108	50.09.0109		HA-2525-5	ANY
	IC..129	50.09.0106		NE 5532 AN	ANY
	IC..131	50.09.0109		HA-2525-5	ANY
	IC..132	50.17.0101		HI 201 HS	Ad
	IC..133	50.09.0109		HA-2525-5	ANY
	IC..153	50.07.0037		AD 7528 JN	ANY
	IC..154	50.09.0106		NE 5532 AN	ANY
	IC..155	50.99.0181		HI-200-5	ANY
	IC..156	50.09.0109		HA-2525-5	ANY

STUDER (06) 90/08/10 LAR 8CH A/D CONVERTER PL 1.862.650.20 PAGE 7

IND.	POS.NO.	PART NO.	VALUE	SPECIFICATIONS / EQUIVALENT	MANUF.
	IC..157	50.17.0101		HI 201 HS	Ad
	IC..158	50.09.0109		HA-2525-5	ANY
	IC..179	50.09.0106		NE 5532 AN	ANY
	IC..181	50.09.0109		HA-2525-5	ANY
	IC..182	50.17.0101		HI 201 HS	Ad
	IC..183	50.09.0109		HA-2525-5	ANY
	IC..201	1.010.106.50		OPA600BM	Bb
	IC..202	50.15.0114		uA 9637 ACP, 9637 ATC	ANY
	IC..203	50.21.0244		74 F 244	ANY
	IC..204	50.18.0100		GAL 16 V 8 - 25 LP (SW 1.862.901.20)	ANY
	IC..205	50.14.0114		28L 22N, 63 S 281 N (SW 1.862.900.20)	ANY
	IC..206	50.06.0113		74 LS 113 N	ANY
	IC..207	50.21.0574		74 F 574	ANY
	IC..208	50.06.0138		74 LS 138	ANY
	IC..209	50.06.0540		74 LS 540	ANY
	IC..210	50.18.0013		PAL 20 L 10 (SW 1.862.902.20)	ANY
	IC..211	50.14.0129		74 LS 219	ANY
	IC..212	50.14.0129		74 LS 219	ANY
	IC..213	50.14.0129		74 LS 219	ANY
	IC..214	50.14.0129		74 LS 219	ANY
	IC..215	50.14.0129		74 LS 219	ANY
	IC..216	50.14.0129		74 LS 219	ANY
	IC..217	50.14.0129		74 LS 219	ANY
	IC..218	50.14.0129		74 LS 219	ANY
	IC..219	50.17.0541		74 HCT 541	ANY
	IC..220	50.17.1595		74 HC 595	ANY
	IC..221	50.17.1595		74 HC 595	ANY
	IC..222	50.17.1595		74 HC 595	ANY
	IC..226	50.10.0104		LM 317 SP	ANY
	IC..228	50.10.0105		LM 337 SP	ANY
	IC..230	50.10.0105		LM 337 SP	ANY
	IC..231	50.21.0374		74 F 374	ANY
	J.....1	54.01.0021		JUMPER CONNECTOR	ANY
	JP....1	54.01.0020		JUMPER PLUG ** QTY 3 ***	ANY

STUDER (06) 90/08/10 LAR 8CH A/D CONVERTER PL 1.862.650.20 PAGE 8

IND.	POS.NO.	PART NO.	VALUE	SPECIFICATIONS / EQUIVALENT	MANUF.
	L...201	62.03.0010	48 uH	2 A	ANY
	L...202	62.03.0010	48 uH	2 A	ANY
	L...203	62.03.0010	48 uH	2 A	ANY
	L...204	62.03.0010	48 uH	2 A	ANY
	MP....1	1.862.650.11		PCB	ANY
	MP....2	50.20.3005		HEAT SINK	ANY
	MP....3	28.99.0119		RIVETING NUT, D2.5*0.15*10	ANY
	MP....4	28.99.0119		RIVETING NUT, D2.5*0.15*10	ANY
	MP....5	28.99.0119		RIVETING NUT, D2.5*0.15*10	ANY
	MP....6	28.99.0119		RIVETING NUT, D2.5*0.15*10	ANY
	MP....7	21.53.0355		CYLIN. SCREW, M3*8	ANY
	MP....8	21.53.0355		CYLIN. SCREW, M3*8	ANY
	MP....9	24.16.1030		FIN WASHER, D3.2/5.5	ANY
	MP...10	24.16.1030		FIN WASHER, D3.2/5.5	ANY
	MP...11	21.53.0371		CYLIN. SCREW, M3*14	ANY
	MP...12	37.01.0101		LOCK WASHER, D3.2/8*0.3	ANY
	MP...13	37.01.0101		LOCK WASHER, D3.2/8*0.3	ANY
	MP...14	1.010.006.50		SPRING WASHER TO TO220	ANY
	MP...15	50.20.0404		INSULATING TUBE, D6.0/3.5	ANY
	MP...16	1.862.650.03		INSULATOR	St
	MP...17	1.862.650.02		SCREENING COVER	St
	MP...18	1.862.650.02		SCREENING COVER	St
	MP...19	1.862.650.02		SCREENING COVER	St
	MP...21	21.53.0371		CYLIN. SCREW, M3*14	ANY
	MP...22	37.01.0101		LOCK WASHER, D3.2/8*0.3	ANY
	MP...23	37.01.0101		LOCK WASHER, D3.2/8*0.3	ANY
	MP...24	1.010.006.50		SPRING WASHER TO TO220	ANY
	MP...25	50.20.0404		INSULATING TUBE, D6.0/3.5	ANY
	MP...26	1.862.650.02		SCREENING COVER	St
	MP...31	21.53.0371		CYLIN. SCREW, M3*14	ANY
	MP...32	37.01.0101		LOCK WASHER, D3.2/8*0.3	ANY
	MP...33	37.01.0101		LOCK WASHER, D3.2/8*0.3	ANY
	MP...34	1.010.006.50		SPRING WASHER TO TO220	ANY
	MP...35	50.20.0404		INSULATING TUBE, D6.0/3.5	ANY
	MP...36	1.862.650.02		SCREENING COVER	St
	MP...37	1.862.650.02		SCREENING COVER	St

STUDER (06) 90/08/10 LAR 8CH A/D CONVERTER PL 1.862.650.20 PAGE 9

IND.	POS.NO.	PART NO.	VALUE	SPECIFICATIONS / EQUIVALENT	MANUF.
	MP...38	1.862.650.02		SCREENING COVER	St
	MP...39	64.01.0108		WIRE 9mg	ANY
	MP...40	1.101.001.20		LABEL "HARDWARE-20"	St
	MP...42	43.01.0108		ESE LABEL	ANY
(00)	MP...43	1.010.115.51		LABEL T1A	St
(02)	MP...43	1.010.114.51		LABEL "T800mA"	St
(00)	MP...44	1.010.115.51		LABEL T1A	St
(02)	MP...44	1.010.114.51		LABEL "T800mA"	St
(00)	MP...45	1.010.119.51		LABEL T2,5A	St
(02)	MP...45	1.010.118.51		LABEL "T2.00A"	St
	MP...46	1.862.650.04		ISOLATION ZU ABSCHIRMBLECH	St
	MP...47	1.862.650.04		ISOLATION ZU ABSCHIRMBLECH	St
	MP...48	1.862.650.04		ISOLATION ZU ABSCHIRMBLECH	St
	MP...49	1.862.650.04		ISOLATION ZU ABSCHIRMBLECH	St
	MP...51	1.862.650.04		ISOLATION ZU ABSCHIRMBLECH	St
	MP...52	1.862.650.04		ISOLATION ZU ABSCHIRMBLECH	St
	MP...53	1.862.650.04		ISOLATION ZU ABSCHIRMBLECH	St
	MP...54	1.862.650.04		ISOLATION ZU ABSCHIRMBLECH	St
	MP...55	1.862.650.04		ISOLATION ZU ABSCHIRMBLECH	St
	MP...56	1.862.650.04		ISOLATION ZU ABSCHIRMBLECH	St
	MP...57	1.862.650.04		ISOLATION ZU ABSCHIRMBLECH	St
	MP...58	1.862.650.04		ISOLATION ZU ABSCHIRMBLECH	St
	MP...59	1.862.650.04		ISOLATION ZU ABSCHIRMBLECH	St
	MP...60	1.862.650.04		ISOLATION ZU ABSCHIRMBLECH	St
(03)	MP...61	1.862.650.08		IC-UNTERLAGE (WAERMELEITGUMMI)	St
(04)	MP...62	1.862.650.01		Nr. Etikette	St
(04)	MP...63	1.862.650.07		LABEL "A/D"	St
(04)	MP...64	1.862.650.05		AUSWERFERHEBEL	St
(04)	MP...65	1.862.650.05		AUSWERFERHEBEL	St
(04)	MP...66	1.862.650.06		AUSWERFERSTIFT	St
(04)	MP...67	1.862.650.06		AUSWERFERSTIFT	St
(06)	MP...68	29.21.6002		LOETOESE	ANY
	P.....1	54.01.0358		CONNECTOR 3 * 32 EURO PRINT	ANY
	P.....2	54.01.0358		CONNECTOR 3 * 32 EURO PRINT	ANY
	R.....1	57.11.3151	150 E	1% MF	ANY

STUDER (06) 90/08/10 LAR 8CH A/D CONVERTER PL 1.862.650.20 PAGE 10

IND.	POS.NO.	PART NO.	VALUE	SPECIFICATIONS / EQUIVALENT	MANUF.
(00)	R.....2	57.11.3122	1.2 k	1% MF	ANY
(01)	R.....2	57.11.3471	470 E	1% MF	ANY
	R.....5	57.11.3332	3.3 k	1%, MF	ANY
	R.....6	57.11.3332	3.3 k	1%, MF	ANY
	R.....7	57.11.3222	2.2 k	1%, MF	ANY
	R.....8	57.11.3222	2.2 k	1%, MF	ANY
	R....13	57.11.3561	560 E	1%, MF	ANY
	R....14	57.11.3512	5.1 k	1%, MF	ANY
	R....16	57.11.3202	2 k	1%, MF	ANY
	R....17	57.11.3512	5.1 k	1%, MF	ANY
	R....18	57.11.3153	15 k	1%, MF	ANY
	R....20	57.11.3241	240 E	1%, MF	ANY
	R....21	57.11.3153	15 k	1%, MF	ANY
	R....22	57.11.3120	12 E	1%, MF	ANY
	R....23	57.11.3222	2.2 k	1%, MF	ANY
	R....25	57.11.5475	4.7 M	5%, MF	ANY
	R....30	57.11.3332	3.3 k	1%, MF	ANY
	R....31	57.11.3332	3.3 k	1%, MF	ANY
	R....32	57.11.3222	2.2 k	1%, MF	ANY
	R....33	57.11.3222	2.2 k	1%, MF	ANY
	R....38	57.11.3561	560 E	1%, MF	ANY
	R....39	57.11.3512	5.1 k	1%, MF	ANY
	R....41	57.11.3202	2 K	1%, MF	ANY
	R....42	57.11.3512	5.1 k	1%, MF	ANY
	R....43	57.11.3153	15 k	1%, MF	ANY
	R....45	57.11.3241	240 E	1%, MF	ANY
	R....46	57.11.3153	15 k	1%, MF	ANY
	R....47	57.11.3120	12 E	1%, MF	ANY
	R....48	57.11.3222	2.2 k	1%, MF	ANY
	R....50	57.11.5475	4.7 M	5%, MF	ANY
	R....55	57.11.3332	3.3 k	1%, MF	ANY
	R....56	57.11.3332	3.3 k	1%, MF	ANY
	R....57	57.11.3222	2.2 k	1%, MF	ANY
	R....58	57.11.3222	2.2 k	1%, MF	ANY
	R....63	57.11.3561	560 E	1%, MF	ANY
	R....64	57.11.3512	5.1 k	1%, MF	ANY
	R....66	57.11.3202	2 k	1%, MF	ANY

STUDER (06) 90/08/10 LAR 8CH A/D CONVERTER PL 1.862.650.20 PAGE 11

IND.	POS.NO.	PART NO.	VALUE	SPECIFICATIONS / EQUIVALENT	MANUF.
	R....67	57.11.3512	5.1 k	1%, MF	ANY
	R....68	57.11.3153	15 k	1%, MF	ANY
	R....70	57.11.3241	240 E	1%, MF	ANY
	R....71	57.11.3153	15 k	1%, MF	ANY
	R....72	57.11.3120	12 E	1%, MF	ANY
	R....73	57.11.3222	2.2 k	1%, MF	ANY
	R....75	57.11.5475	4.7 M	5%, MF	ANY
	R....80	57.11.3332	3.3 k	1%, MF	ANY
	R....81	57.11.3332	3.3 k	1%, MF	ANY
	R....82	57.11.3222	2.2 k	1%, MF	ANY
	R....83	57.11.3222	2.2 k	1%, MF	ANY
	R....88	57.11.3561	560 E	1%, MF	ANY
	R....89	57.11.3512	5.1 k	1%, MF	ANY
	R....91	57.11.3202	2 k	1%, MF	ANY
	R....92	57.11.3512	5.1 k	1%, MF	ANY
	R....93	57.11.3153	15 k	1%, MF	ANY
	R....95	57.11.3241	240 E	1%, MF	ANY
	R....96	57.11.3153	15 k	1%, MF	ANY
	R....97	57.11.3120	12 E	1%, MF	ANY
	R....98	57.11.3222	2.2 k	1%, MF	ANY
	R...100	57.11.5475	4.7 M	5%, MF	ANY
	R...105	57.11.3332	3.3 k	1%, MF	ANY
	R...106	57.11.3332	3.3 k	1%, MF	ANY
	R...107	57.11.3222	2.2 k	1%, MF	ANY
	R...108	57.11.3222	2.2 k	1%, MF	ANY
	R...113	57.11.3561	560 E	1%, MF	ANY
	R...114	57.11.3512	5.1 k	1%, MF	ANY
	R...116	57.11.3202	2 K	1%, MF	ANY
	R...117	57.11.3512	5.1 k	1%, MF	ANY
	R...118	57.11.3153	15 k	1%, MF	ANY
	R...120	57.11.3241	240 E	1%, MF	ANY
	R...121	57.11.3153	15 k	1%, MF	ANY
	R...122	57.11.3120	12 E	1%, MF	ANY
	R...123	57.11.3222	2.2 k	1%, MF	ANY
	R...125	57.11.5475	4.7 M	5%, MF	ANY
	R...130	57.11.3332	3.3 k	1%, MF	ANY
	R...131	57.11.3332	3.3 k	1%, MF	ANY

STUDER (06) 90/08/10 LAR 8CH A/D CONVERTER PL 1.862.650.20 PAGE 12

A/D CONVERTER WITH TRAFO 1.862.650.20

IND.	POS.NO.	PART NO.	VALUE	SPECIFICATIONS / EQUIVALENT	MANUF.
	R...132	57.11.3222	2.2 k	1%, MF	ANY
	R...133	57.11.3222	2.2 k	1%, MF	ANY
	R...138	57.11.3561	560 E	1%, MF	ANY
	R...139	57.11.3512	5.1 k	1%, MF	ANY
	R...141	57.11.3202	2 k	1%, MF	ANY
	R...142	57.11.3512	5.1 k	1%, MF	ANY
	R...143	57.11.3153	15 k	1%, MF	ANY
	R...145	57.11.3241	240 E	1%, MF	ANY
	R...146	57.11.3153	15 k	1%, MF	ANY
	R...147	57.11.3120	12 E	1%, MF	ANY
	R...148	57.11.3222	2.2 k	1%, MF	ANY
	R...150	57.11.5475	4.7 M	5%, MF	ANY
	R...155	57.11.3332	3.3 k	1%, MF	ANY
	R...156	57.11.3332	3.3 k	1%, MF	ANY
	R...157	57.11.3222	2.2 k	1%, MF	ANY
	R...158	57.11.3222	2.2 k	1%, MF	ANY
	R...163	57.11.3561	560 E	1%, MF	ANY
	R...164	57.11.3512	5.1 k	1%, MF	ANY
	R...166	57.11.3202	2 k	1%, MF	ANY
	R...167	57.11.3512	5.1 k	1%, MF	ANY
	R...168	57.11.3153	15 k	1%, MF	ANY
	R...170	57.11.3241	240 E	1%, MF	ANY
	R...171	57.11.3153	15 k	1%, MF	ANY
	R...172	57.11.3120	12 E	1%, MF	ANY
	R...173	57.11.3222	2.2 k	1%, MF	ANY
	R...175	57.11.5475	4.7 M	5%, MF	ANY
	R...180	57.11.3332	3.3 k	1%, MF	ANY
	R...181	57.11.3332	3.3 k	1%, MF	ANY
	R...182	57.11.3222	2.2 k	1%, MF	ANY
	R...183	57.11.3222	2.2 k	1%, MF	ANY
	R...188	57.11.3561	560 E	1%, MF	ANY
	R...189	57.11.3512	5.1 k	1%, MF	ANY
	R...191	57.11.3202	2 k	1%, MF	ANY
	R...192	57.11.3512	5.1 k	1%, MF	ANY
	R...193	57.11.3153	15 k	1%, MF	ANY
	R...195	57.11.3241	240 E	1%, MF	ANY
	R...196	57.11.3153	15 k	1%, MF	ANY

S T U D E R (06) 90/08/10 LAR 8CH A/D CONVERTER PL 1.862.650.20 PAGE 13

IND.	POS.NO.	PART NO.	VALUE	SPECIFICATIONS / EQUIVALENT	MANUF.
	R...197	57.11.3120	12 E	1%, MF	ANY
	R...198	57.11.3222	2.2 k	1%, MF	ANY
	R...200	57.11.5475	4.7 M	5%, MF	ANY
	R...201	57.11.3242	2.4 k	1%, MF	ANY
	R...202	57.11.3102	1 k	1%, MF	ANY
	R...203	57.11.3102	1 k	1%, MF	ANY
	R...204	57.11.3102	1 k	1%, MF	ANY
	R...205	57.11.3221	220 E	1%, MF	ANY
(00)	R...206	57.11.3391	390 E	1%, MF	ANY
(05)	R...206	57.11.3511	510 E	1%, MF	ANY
	R...207	57.11.3241	240 E	1%, MF	ANY
(00)	R...210	57.11.3391	390 E	1%, MF	ANY
(05)	R...210	57.11.3511	510 E	1%, MF	ANY
	R...211	57.11.3241	240 E	1%, MF	ANY
	R...214	57.56.5470	47 E 1	0%, 4W	ANY
	R...215	57.11.3911	910 E	1%, MF	ANY
	R...216	57.11.3241	240 E	1%, MF	ANY
	R...218	57.11.3222	2.2 k	1%, MF	ANY
	R...219	57.11.3222	2.2 k	1%, MF	ANY
	RA...2	58.01.8502	5 k	10%, .5 W , PMS	ANY
	RA...12	58.01.8502	5 k	10%, .5 W , PMS	ANY
	RA...22	58.01.8502	5 k	10%, .5 W , PMS	ANY
	RA...32	58.01.8502	5 k	10%, .5 W , PMS	ANY
	RA...42	58.01.8502	5 k	10%, .5 W , PMS	ANY
	RA...52	58.01.8502	5 k	10%, .5 W , PMS	ANY
	RA...62	58.01.8502	5 k	10%, .5 W , PMS	ANY
	RA...72	58.01.8502	5 k	10%, .5 W , PMS	ANY
	TP....1	54.02.0320		TESTPOINT	ANY
	TP....2	54.02.0320		TESTPOINT	ANY
	TP....3	54.02.0320		TESTPOINT	ANY
	TP....4	54.02.0320		TESTPOINT	ANY
	TP....5	54.02.0320		TESTPOINT	ANY
	TP....6	54.02.0320		TESTPOINT	ANY
	TP....7	54.02.0320		TESTPOINT	ANY
	TP....8	54.02.0320		TESTPOINT	ANY

S T U D E R (06) 90/08/10 LAR 8CH A/D CONVERTER PL 1.862.650.20 PAGE 14

IND.	POS.NO.	PART NO.	VALUE	SPECIFICATIONS / EQUIVALENT	MANUF.
	TP....9	54.02.0320		TESTPOINT	ANY
	TP...10	54.02.0320		TESTPOINT	ANY
	TP...11	54.02.0320		TESTPOINT	ANY
	TP...12	54.02.0320		TESTPOINT	ANY
	TP...14	54.02.0320		TESTPOINT	ANY
	TP...15	54.02.0320		TESTPOINT	ANY
	TP...16	54.02.0320		TESTPOINT	ANY
	TP...25	54.02.0320		TESTPOINT	ANY
	TP...26	54.02.0320		TESTPOINT	ANY
	TP...27	54.02.0320		TESTPOINT	ANY
	TP...28	54.02.0320		TESTPOINT	ANY
	TP...29	54.02.0320		TESTPOINT	ANY
	TP...30	54.02.0320		TESTPOINT	ANY
	TP...31	54.02.0320		TESTPOINT	ANY
	TP...32	54.02.0320		TESTPOINT	ANY
	TP...33	54.02.0320		TESTPOINT	ANY
	TP...35	54.02.0320		TESTPOINT	ANY
	TP...36	54.02.0320		TESTPOINT	ANY
	TP...37	54.02.0320		TESTPOINT	ANY
	TP...38	54.02.0320		TESTPOINT	ANY
	TP...40	54.02.0320		TESTPOINT	ANY
	TP...41	54.02.0320		TESTPOINT	ANY
	TP...42	54.02.0320		TESTPOINT	ANY
	TP...43	54.02.0320		TESTPOINT	ANY
	TP...44	54.02.0320		TESTPOINT	ANY
	XF..201	53.03.0118		FUSE HOLDER	ANY
	XF..202	53.03.0118		FUSE HOLDER	ANY
	XF..204	53.03.0118		FUSE HOLDER	ANY
	XIC...3	53.03.0165		DIL-SOCKET, 20-PIN	ANY
	XIC...4	53.03.0166		DIL-SOCKET, 8-PIN	ANY
	XIC...6	53.03.0166		DIL-SOCKET, 8-PIN	ANY
	XIC...7	53.03.0168		DIL-SOCKET, 16-PIN	ANY
	XIC...8	53.03.0166		DIL-SOCKET, 8-PIN	ANY
	XIC..29	53.03.0166		DIL-SOCKET, 8-PIN	ANY
	XIC..31	53.03.0166		DIL-SOCKET, 8-PIN	ANY

S T U D E R (06) 90/08/10 LAR 8CH A/D CONVERTER PL 1.862.650.20 PAGE 15

IND.	POS.NO.	PART NO.	VALUE	SPECIFICATIONS / EQUIVALENT	MANUF.
	XIC..32	53.03.0168		DIL-SOCKET, 16-PIN	ANY
	XIC..33	53.03.0166		DIL-SOCKET, 8-PIN	ANY
	XIC..53	53.03.0165		DIL-SOCKET, 20-PIN	ANY
	XIC..54	53.03.0166		DIL-SOCKET, 8-PIN	ANY
	XIC..56	53.03.0166		DIL-SOCKET, 8-PIN	ANY
	XIC..57	53.03.0168		DIL-SOCKET, 16-PIN	ANY
	XIC..58	53.03.0166		DIL-SOCKET, 8-PIN	ANY
	XIC..79	53.03.0166		DIL-SOCKET, 8-PIN	ANY
	XIC..81	53.03.0166		DIL-SOCKET, 8-PIN	ANY
	XIC..82	53.03.0168		DIL-SOCKET, 16-PIN	ANY
	XIC..83	53.03.0166		DIL-SOCKET, 8-PIN	ANY
	XIC.103	53.03.0165		DIL-SOCKET, 20-PIN	ANY
	XIC.104	53.03.0166		DIL-SOCKET, 8-PIN	ANY
	XIC.106	53.03.0166		DIL-SOCKET, 8-PIN	ANY
	XIC.107	53.03.0168		DIL-SOCKET, 16-PIN	ANY
	XIC.108	53.03.0166		DIL-SOCKET, 8-PIN	ANY
	XIC.129	53.03.0166		DIL-SOCKET, 8-PIN	ANY
	XIC.131	53.03.0166		DIL-SOCKET, 8-PIN	ANY
	XIC.132	53.03.0168		DIL-SOCKET, 16-PIN	ANY
	XIC.133	53.03.0166		DIL-SOCKET, 8-PIN	ANY
	XIC.153	53.03.0165		DIL-SOCKET, 20-PIN	ANY
	XIC.154	53.03.0166		DIL-SOCKET, 8-PIN	ANY
	XIC.156	53.03.0166		DIL-SOCKET, 8-PIN	ANY
	XIC.157	53.03.0168		DIL-SOCKET, 16-PIN	ANY
	XIC.158	53.03.0166		DIL-SOCKET, 8-PIN	ANY
	XIC.179	53.03.0166		DIL-SOCKET, 8-PIN	ANY
	XIC.181	53.03.0166		DIL-SOCKET, 8-PIN	ANY
	XIC.182	53.03.0168		DIL-SOCKET, 16-PIN	ANY
	XIC.183	53.03.0166		DIL-SOCKET, 8-PIN	ANY
	XIC.202	53.03.0166		DIL-SOCKET, 8-PIN	ANY
	XIC.203	53.03.0165		DIL-SOCKET, 20-PIN	ANY
	XIC.204	53.03.0165		DIL-SOCKET, 20-PIN	ANY
	XIC.205	53.03.0165		DIL-SOCKET, 20-PIN	ANY
	XIC.206	53.03.0167		DIL-SOCKET, 14-PIN	ANY
	XIC.207	53.03.0165		DIL-SOCKET, 20-PIN	ANY
	XIC.208	53.03.0168		DIL-SOCKET, 16-PIN	ANY
	XIC.209	53.03.0165		DIL-SOCKET, 20-PIN	ANY

S T U D E R (06) 90/08/10 LAR 8CH A/D CONVERTER PL 1.862.650.20 PAGE 16

IND.	POS.NO.	PART NO.	VALUE	SPECIFICATIONS / EQUIVALENT	MANUF.
	XIC.210	53.03.0182		DIL-SOCKET, 24-PIN, MOLDED	ANY
	XIC.211	53.03.0168		DIL-SOCKET, 16-PIN	ANY
	XIC.212	53.03.0168		DIL-SOCKET, 16-PIN	ANY
	XIC.213	53.03.0168		DIL-SOCKET, 16-PIN	ANY
	XIC.214	53.03.0168		DIL-SOCKET, 16-PIN	ANY
	XIC.215	53.03.0168		DIL-SOCKET, 16-PIN	ANY
	XIC.216	53.03.0168		DIL-SOCKET, 16-PIN	ANY
	XIC.217	53.03.0168		DIL-SOCKET, 16-PIN	ANY
	XIC.218	53.03.0168		DIL-SOCKET, 16-PIN	ANY
	XIC.219	53.03.0165		DIL-SOCKET, 20-PIN	ANY
	XIC.220	53.03.0168		DIL-SOCKET, 16-PIN	ANY
	XIC.221	53.03.0168		DIL-SOCKET, 16-PIN	ANY
	XIC.222	53.03.0168		DIL-SOCKET, 16-PIN	ANY
	XIC.224	53.03.0165		DIL-SOCKET, 20-PIN	ANY
	XIC.225	53.03.0165		DIL-SOCKET, 20-PIN	ANY

REMARKS:
Aenderungen:

01: R2 470 Ohm
02: Textaenderung fuer Sicherungen MF 43...45
03: IC-Unterlage MF 61 neu
04: MF 62-67 neu (Print-Auswurfst)
05: R206 + R210 von 390 Ohm auf 510 Ohm geaendert
06: Anti-aliasing-filter von 00 auf 81 geaendert

MANUFACTURERS:
St = STUDER, Ph = PHILIPS, An = ANALOGIC, Ha = HARRIS, Bb = BURR BROWN
Ad = ANALOG DEVICES

ABBREVIATIONS:
CER = CERAMIC / PP = POLY-PROPYLENE /
MF = METAL-FILM RESISTOR / XF = CLAMP FOR FUSES / XIC = IC-SOCKET

ORIG 89/06/16 (01) 89/11/29 (02) 90/01/11 (03) 90/03/22 (04) 90/06/25
(05) 90/08/07 (06) 90/08/10

S T U D E R (06) 90/08/10 LAR 8CH A/D CONVERTER PL 1.862.650.20 PAGE 17

BLOCK DIAGRAM D/A CONVERTER

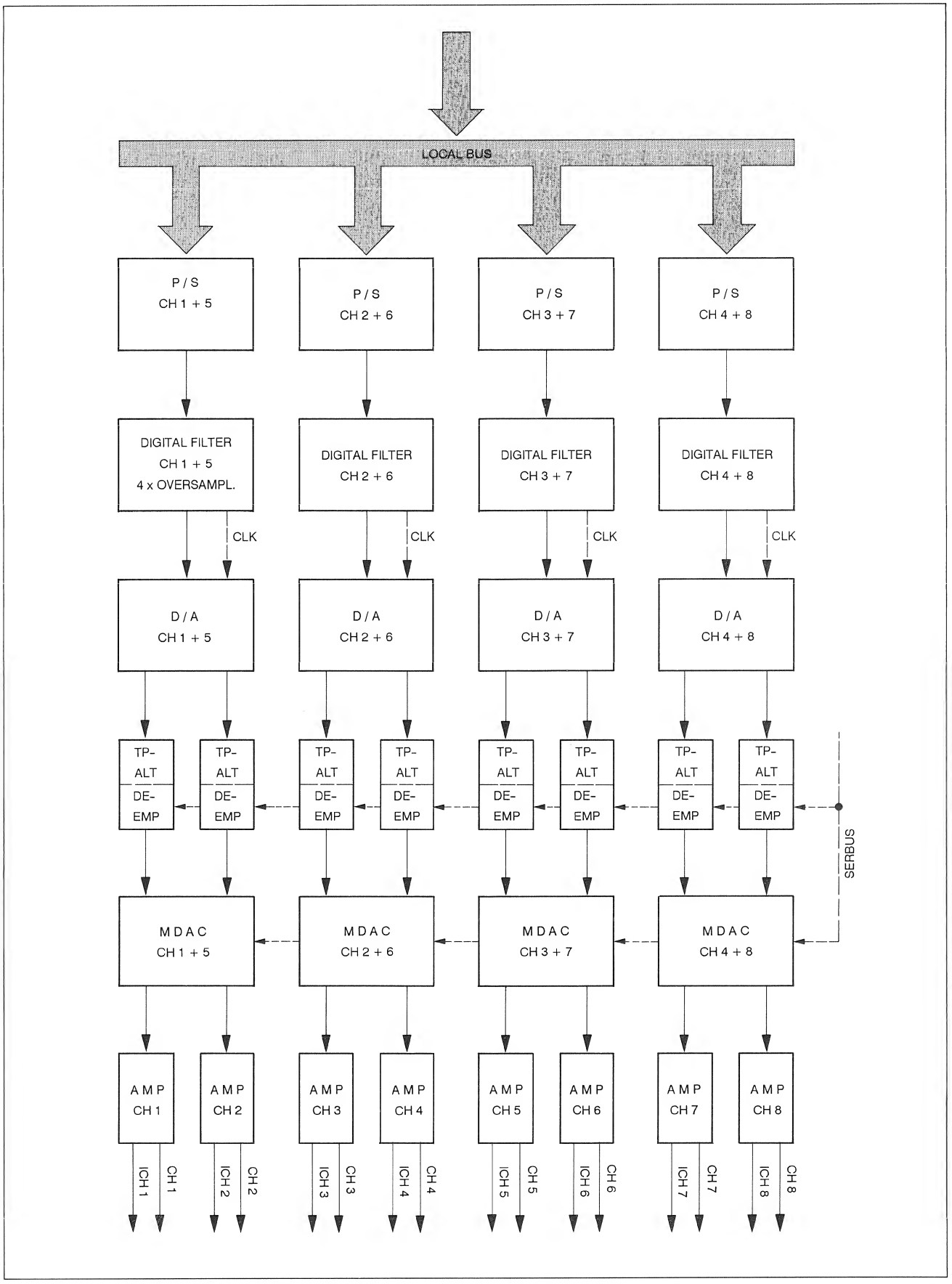

D/A CONVERTER 1.862.651.21

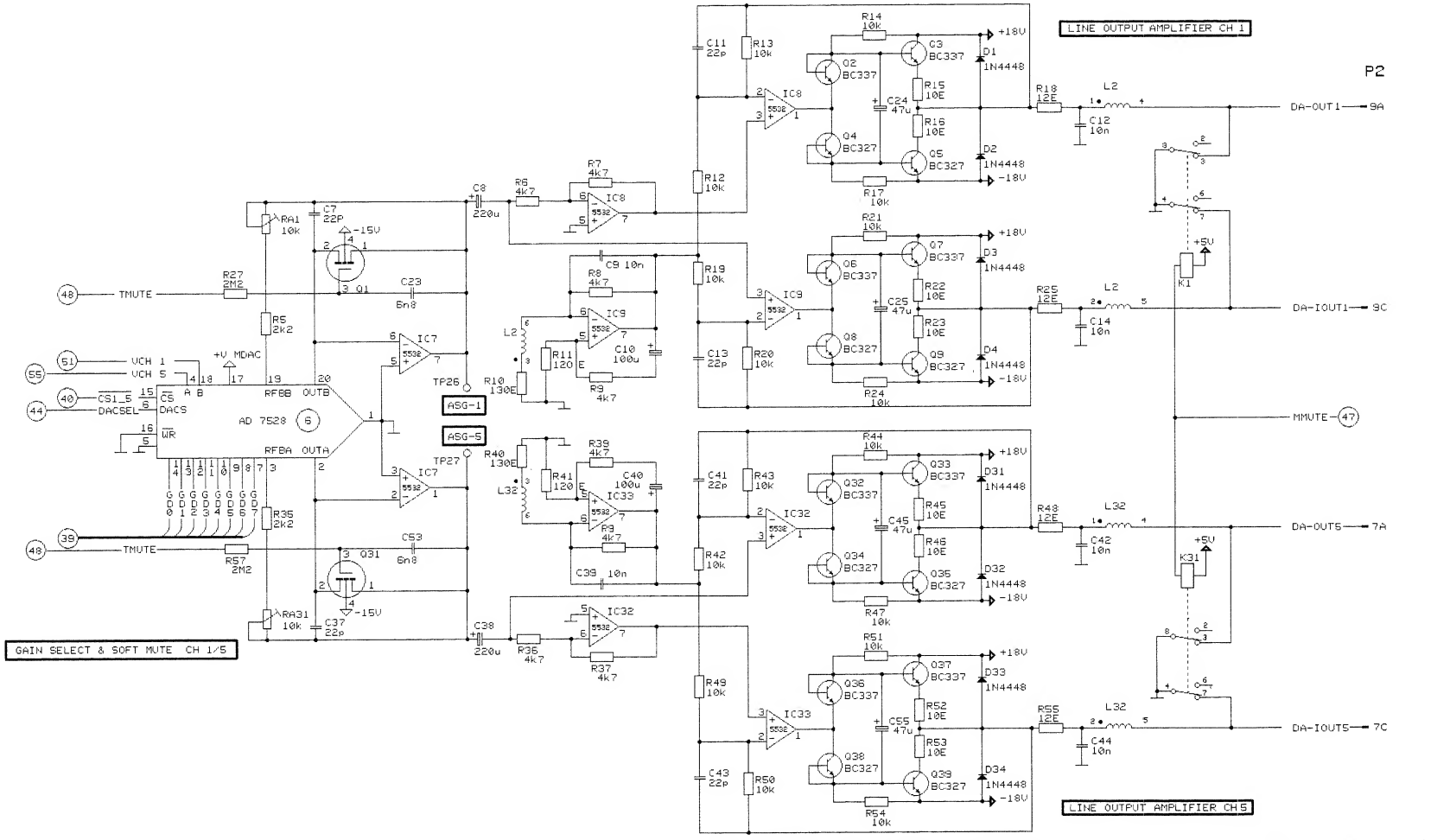

⓪ 8.7.87 HJK	① 18.1.88 ER	② 7.2.89 ER		
	D820 MCH			PAGE 1 OF 9
STUDER	DIG/ANA CONVERTER		SC	1.862.651.21

D/A CONVERTER 1.862.651.21

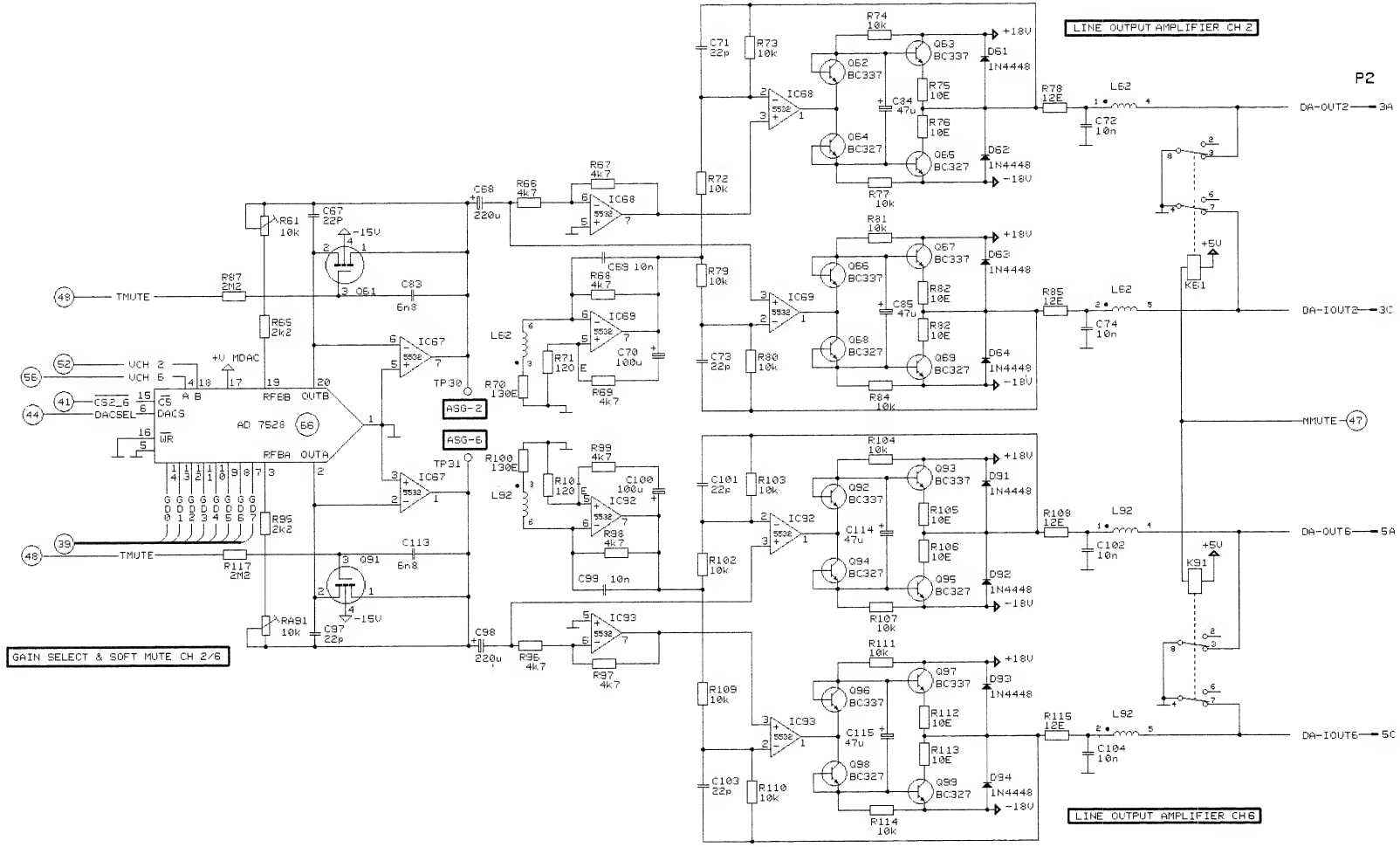

⓪ 8.7.87 HJK	① 7.2.89 ER			
	D820 MCH			PAGE 2 OF 9
STUDER	DIG/ANA CONVERTER		SC	1.862.651.24

D/A CONVERTER 1.862.651.21

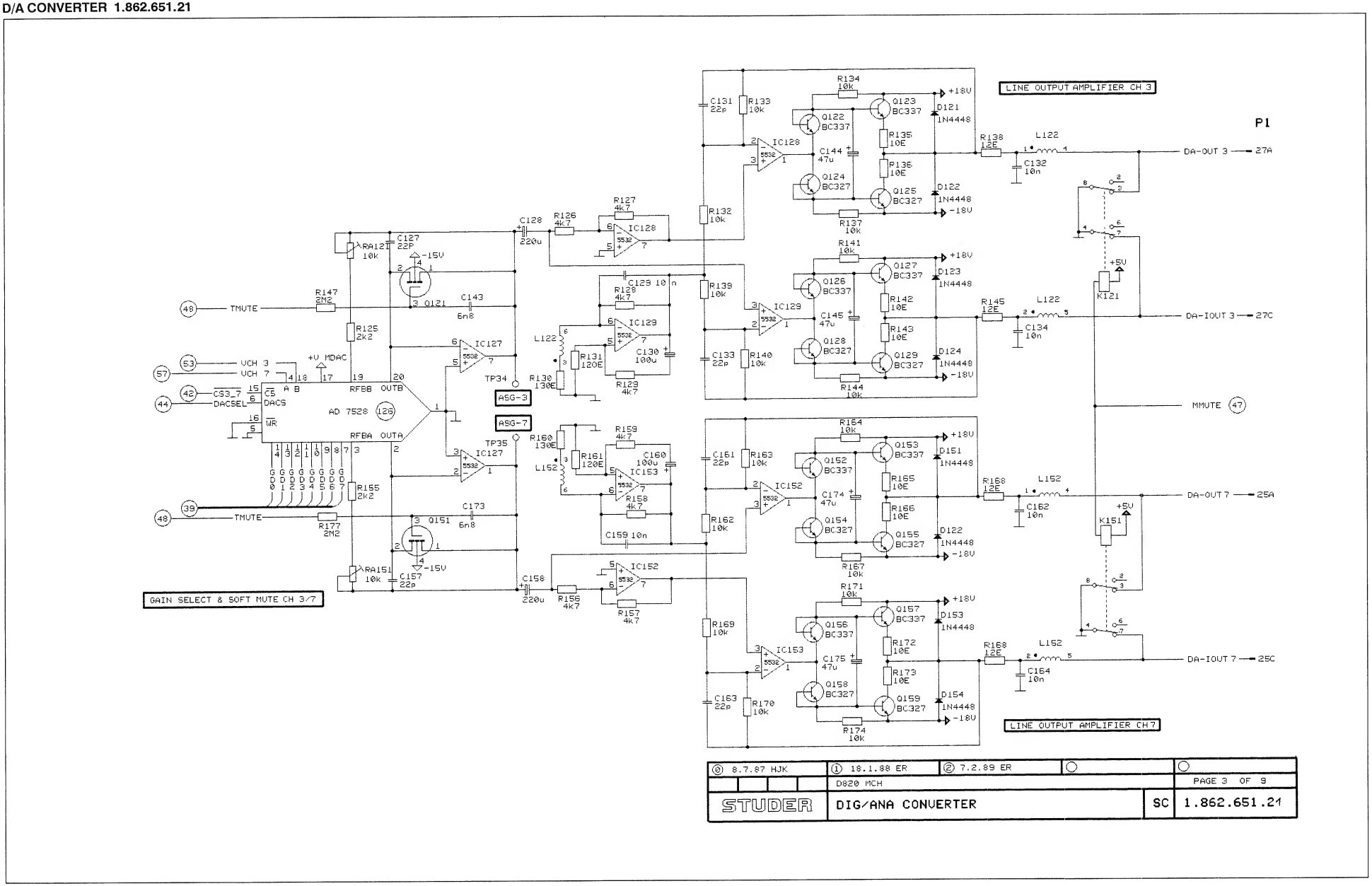

D/A CONVERTER 1.862.651.21

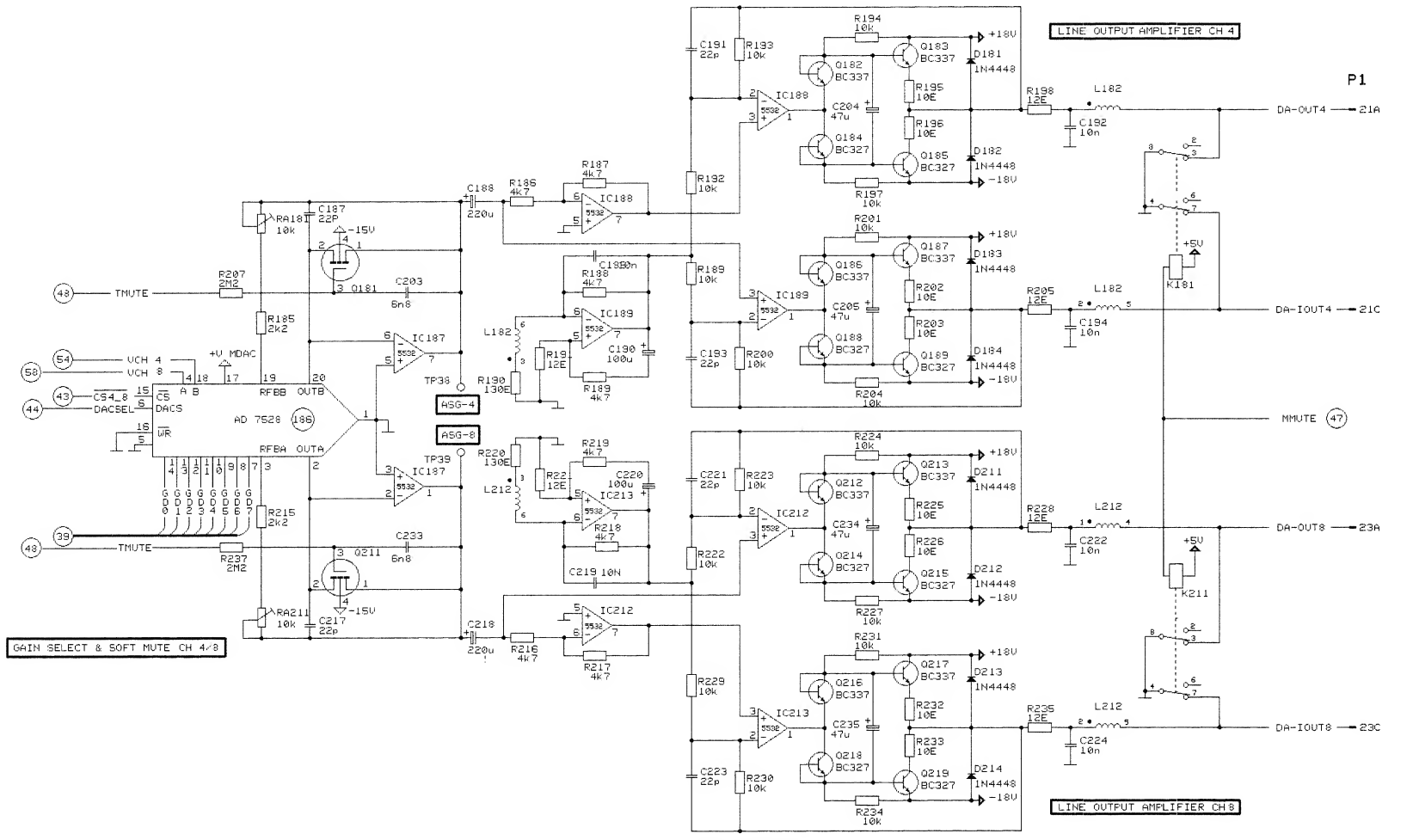

⓪ 8.7.87 HJK	① 18.1.88 ER	② 7.2.89 ER	
	D820 MCH		PAGE 4 OF 9
STUDER	DIG/ANA CONVERTER	SC	1.862.651.21

D/A CONVERTER 1.862.651.21

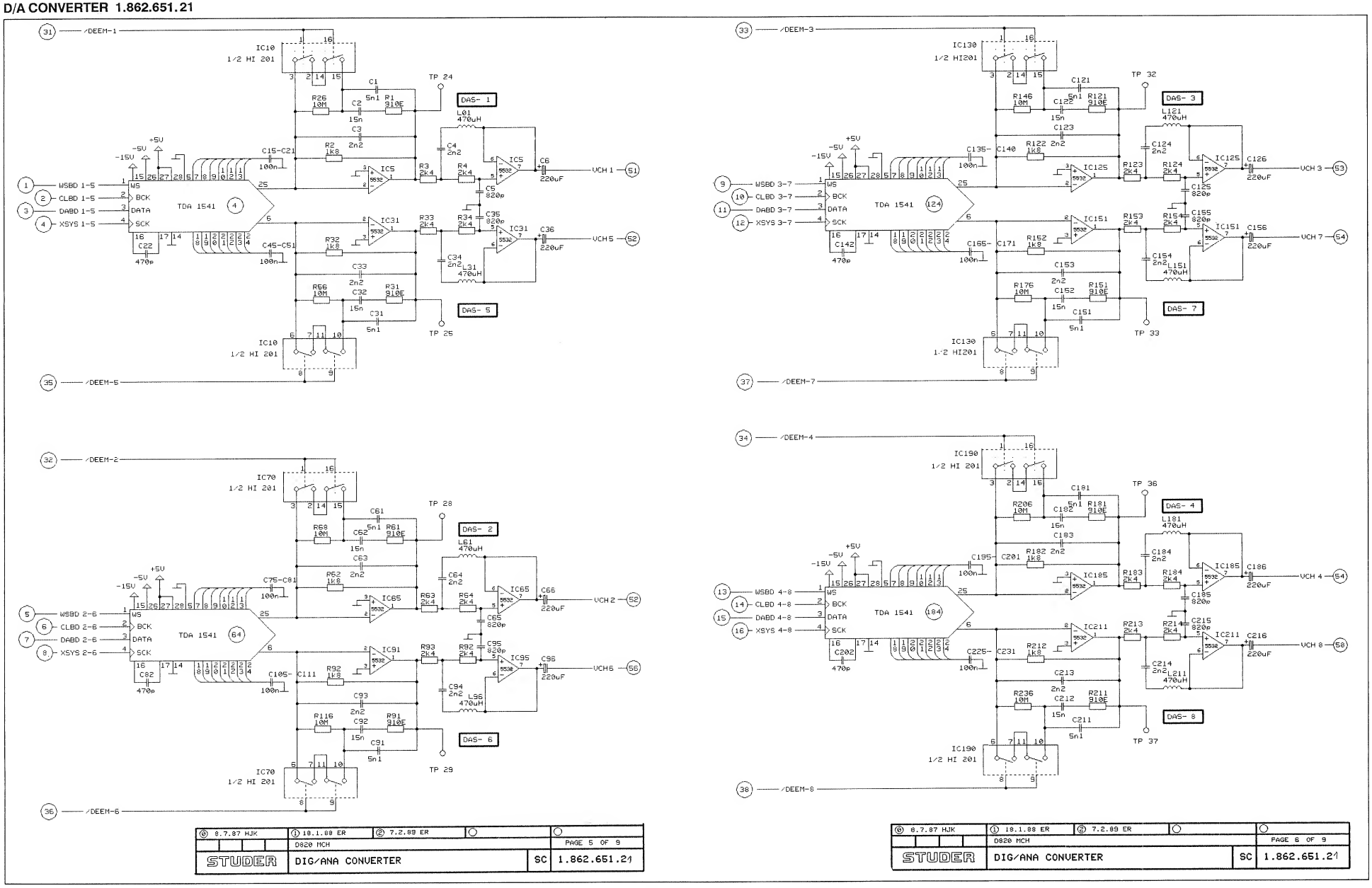

⓪ 8.7.87 HJK	① 18.1.88 ER	② 7.2.89 ER	
	D820 MCH		PAGE 5 OF 9
STUDER	DIG/ANA CONVERTER	SC	1.862.651.21

⓪ 8.7.87 HJK	① 18.1.88 ER	② 7.2.89 ER	
	D820 MCH		PAGE 6 OF 9
STUDER	DIG/ANA CONVERTER	SC	1.862.651.21

D/A CONVERTER 1.862.651.21

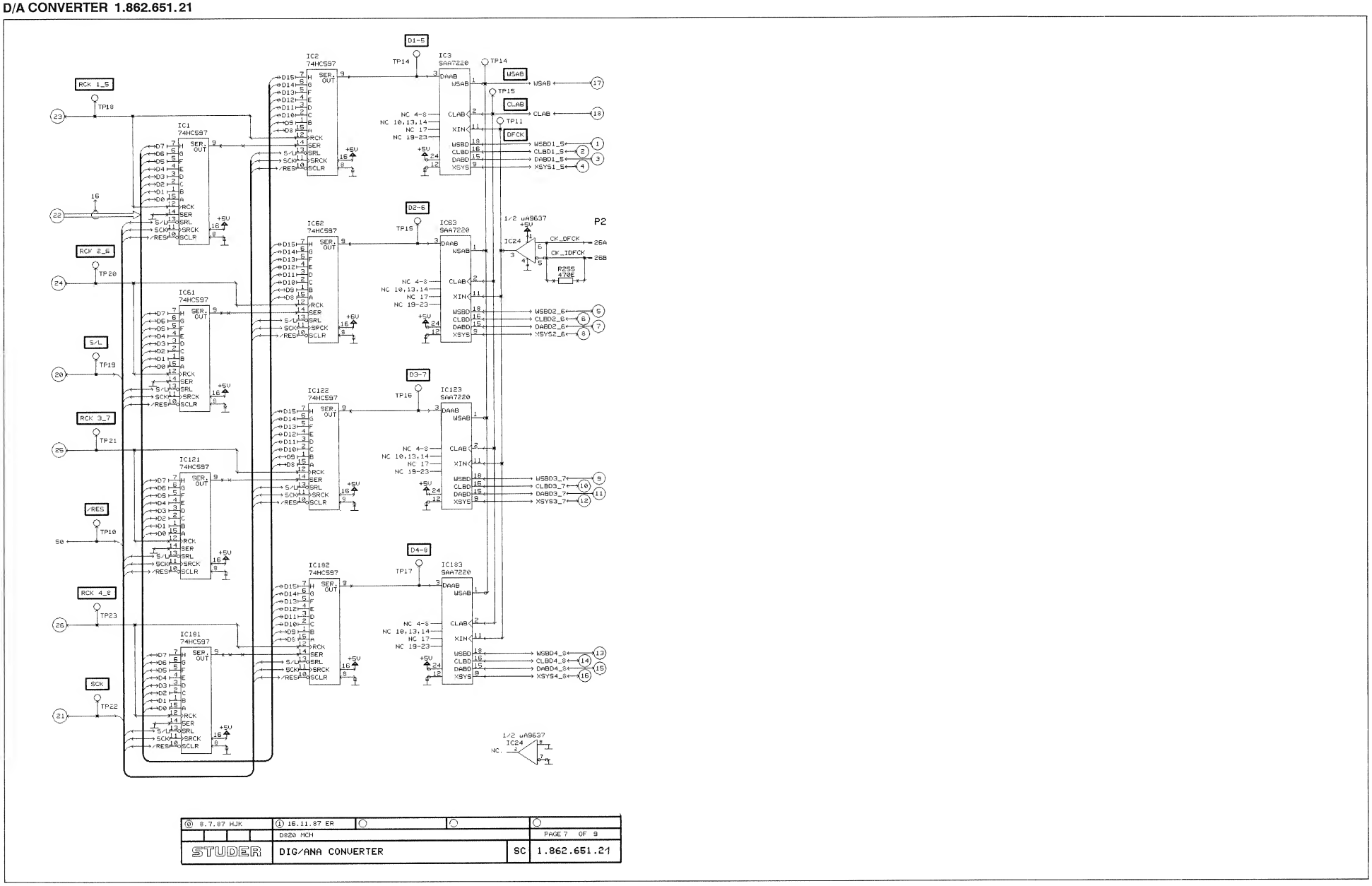

8.7.87 HJK	16.11.87 ER		
	D820 MCH		PAGE 7 OF 9
STUDER	DIG/ANA CONVERTER	SC	1.862.651.21

D/A CONVERTER 1.862.651.21

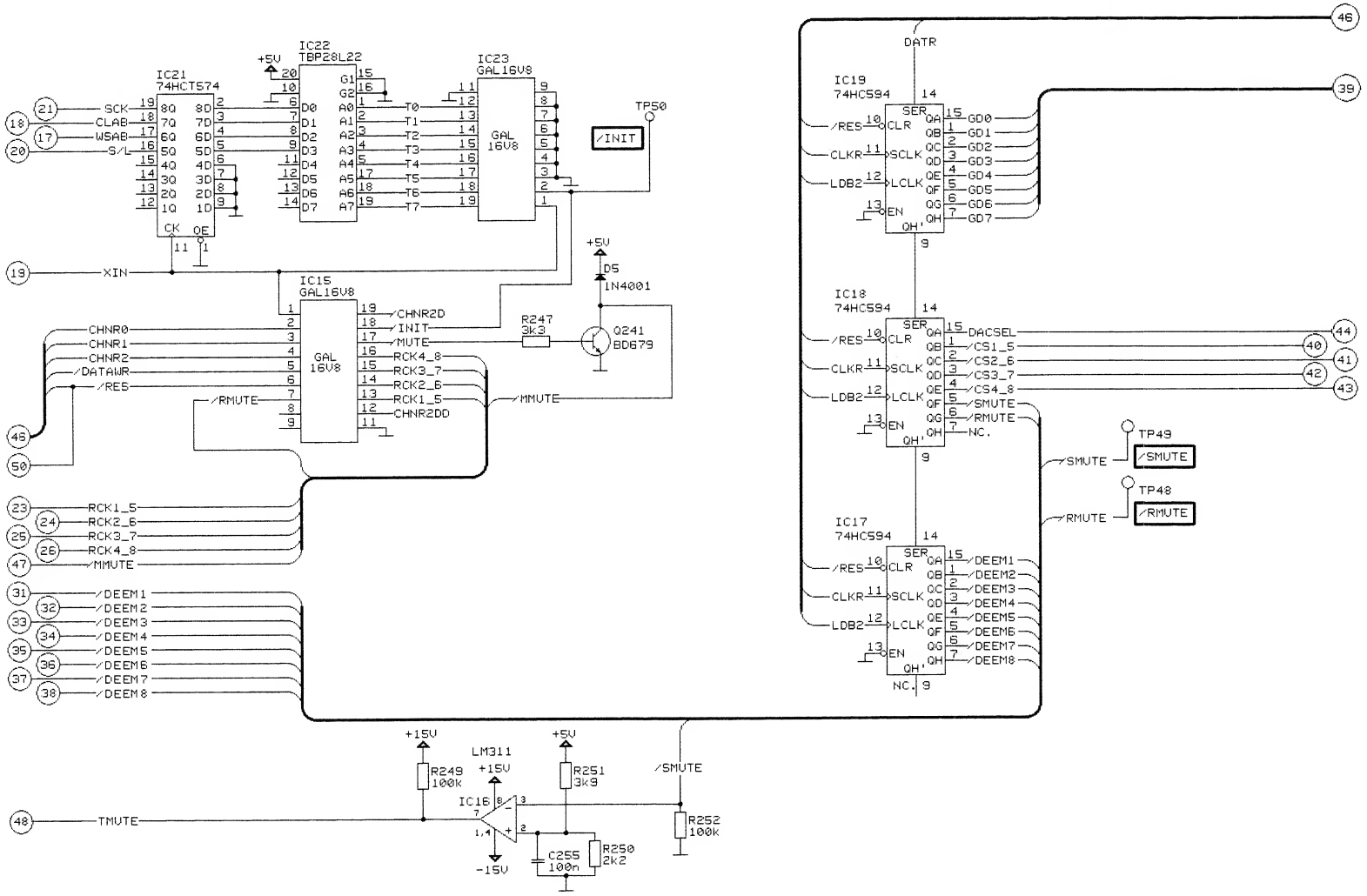

8.7.87 HJK				
	D820 MCH			PAGE 8 OF 9
STUDER	DIG/ANA CONVERTER		SC	1.862.651.21

D/A CONVERTER 1.862.651.21

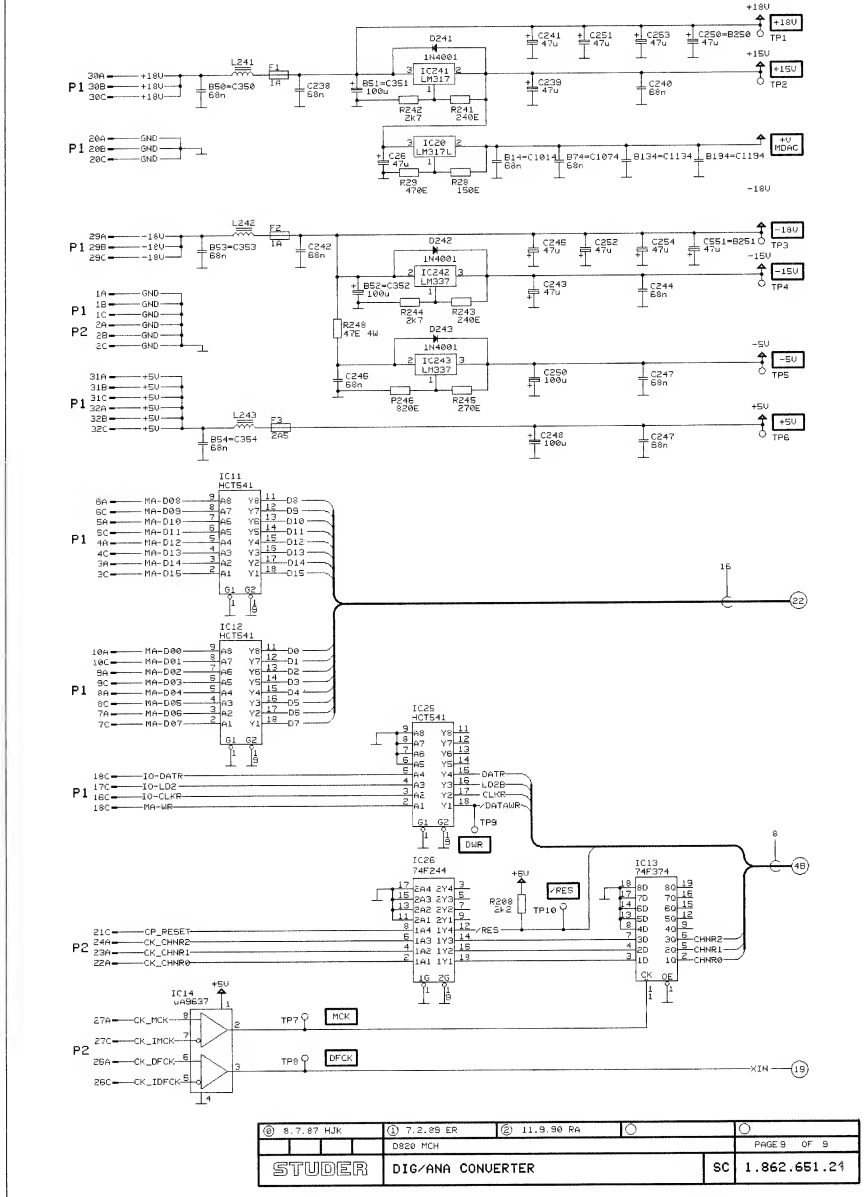

D/A CONVERTER 1.862.651.21 PART I

IND.	POS.NO.	PART NO.	VALUE	SPECIFICATIONS / EQUIVALENT	MANUF.
	C.....1	59.12.7512	5100 p	1%, 63V , PS	ANY
	C.....2	59.05.2153	.015 u	2.5%, 40V , PP	ANY
	C.....3	59.05.1222	2200 p	1%, 40V , PP	ANY
	C.....4	59.05.1222	2200 p	1%, 40V , PP	ANY
	C.....5	59.12.7821	820 p	1%, 40V , PS	ANY
	C.....6	59.22.4221	220 u	-20%, 16V , EL	ANY
	C.....7	59.34.2220	22 p	5%, 63V , CER , N150	ANY
	C.....8	59.22.4221	220 u	-20%, 16V , EL	ANY
	C.....9	59.05.1103	.01 u	1%, 40V , PP	ANY
	C....10	59.22.5101	100 u	-20%, 25V , EL	ANY
	C....11	59.34.2220	22 p	5%, 63V , CER , N150	ANY
	C....12	59.05.1103	.01 u	1%, 63V , PP	ANY
	C....13	59.34.2220	22 p	5%, 63V , CER , N150	ANY
	C....14	59.05.1103	.01 u	1%, 63V , PP	ANY
	C....15	59.06.0104	.1 u	10%, 40V , PETP	ANY
	C....16	59.06.0104	.1 u	10%, 40V , PETP	ANY
	C....17	59.06.0104	.1 u	10%, 40V , PETP	ANY
	C....18	59.06.0104	.1 u	10%, 40V , PETP	ANY
	C....19	59.06.0104	.1 u	10%, 40V , PETP	ANY
	C....20	59.06.0104	.1 u	10%, 40V , PETP	ANY
	C....21	59.06.0104	.1 u	10%, 40V , PETP	ANY
	C....22	59.34.5471	470 p	5%, 40V , CER , N1500	ANY
	C....23	59.05.1682	6800 p	1%, 40V , PP	ANY
	C....24	59.22.5470	47 u	-20%, 25V , EL	ANY
	C....25	59.22.5470	47 u	-20%, 25V , EL	ANY
	C....26	59.22.5470	47 u	-20%, 25V , EL	ANY
	C....31	59.12.7512	5100 p	1%, 63V , PS	ANY
	C....32	59.05.2153	.015 u	2.5%, 40V , PP	ANY
	C....33	59.05.1222	2200 p	1%, 40V , PP	ANY
	C....34	59.05.1222	2200 p	1%, 40V , PP	ANY
	C....35	59.12.7821	820 p	1%, 40V , PS	ANY
	C....36	59.22.4221	220 u	-20%, 16V , EL	ANY
	C....37	59.34.2220	22 p	5%, 63V , CER , N150	ANY
	C....38	59.22.4221	220 u	-20%, 16V , EL	ANY
	C....39	59.05.1103	.01 u	1%, 40V , PP	ANY
	C....40	59.22.5101	100 u	-20%, 25V , EL	ANY
	C....41	59.34.2220	22 p	5%, 63V , CER , N150	ANY

S T U D E R (00) 90/11/01 RA D/A CONVERTER PL 1.862.651.21 PAGE 1

IND.	POS.NO.	PART NO.	VALUE	SPECIFICATIONS / EQUIVALENT	MANUF.
	C....42	59.05.1103	.01 u	1%, 63V , PP	ANY
	C....43	59.34.2220	22 p	5%, 63V , CER , N150	ANY
	C....44	59.05.1103	.01 u	1%, 63V , PP	ANY
	C....45	59.06.0104	.1 u	10%, 63V , PETP	ANY
	C....46	59.06.0104	.1 u	10%, 63V , PETP	ANY
	C....47	59.06.0104	.1 u	10%, 63V , PETP	ANY
	C....48	59.06.0104	.1 u	10%, 63V , PETP	ANY
	C....49	59.06.0104	.1 u	10%, 63V , PETP	ANY
	C....50	59.06.0104	.1 u	10%, 63V , PETP	ANY
	C....51	59.06.0104	.1 u	10%, 63V , PETP	ANY
	C....53	59.05.0682	6800 p	1%, 40V , PP	ANY
	C....54	59.22.5470	47 u	-20%, 25V , EL	ANY
	C....55	59.22.5470	47 u	-20%, 25V , EL	ANY
	C....61	59.12.7512	5100 p	1%, 63V , PS	ANY
	C....62	59.05.2153	.015 u	2.5%, 40V , PP	ANY
	C....63	59.05.1222	2200 p	1%, 40V , PP	ANY
	C....64	59.05.1222	2200 p	1%, 40V , PP	ANY
	C....65	59.12.7821	820 p	1%, 40V , PS	ANY
	C....66	59.22.4221	220 u	-20%, 16V , EL	ANY
	C....67	59.34.2220	22 p	5%, 63V , CER , N150	ANY
	C....68	59.22.4221	220 u	-20%, 16V , EL	ANY
	C....69	59.05.1103	.01 u	1%, 40V , PP	ANY
	C....70	59.22.5101	100 u	-20%, 25V , EL	ANY
	C....71	59.34.2220	22 p	5%, 63V , CER , N150	ANY
	C....72	59.05.1103	.01 u	1%, 63V , PP	ANY
	C....73	59.34.2220	22 p	5%, 63V , CER , N150	ANY
	C....74	59.05.1103	.01 u	1%, 63V , PP	ANY
	C....75	59.06.0104	.1 u	10%, 40V , PETP	ANY
	C....76	59.06.0104	.1 u	10%, 40V , PETP	ANY
	C....77	59.06.0104	.1 u	10%, 40V , PETP	ANY
	C....78	59.06.0104	.1 u	10%, 40V , PETP	ANY
	C....79	59.06.0104	.1 u	10%, 40V , PETP	ANY
	C....80	59.06.0104	.1 u	10%, 40V , PETP	ANY
	C....81	59.06.0104	.1 u	10%, 40V , PETP	ANY
	C....82	59.34.5471	470 p	5%, 40V , CER , N1500	ANY
	C....83	59.05.1682	6800 p	1%, 40V , PP	ANY
	C....84	59.22.5470	47 u	-20%, 25V , EL	ANY

S T U D E R (00) 90/11/01 RA D/A CONVERTER PL 1.862.651.21 PAGE 2

IND.	POS.NO.	PART NO.	VALUE	SPECIFICATIONS / EQUIVALENT	MANUF.
	C....85	59.22.5470	47 u	-20%, 25V , EL	ANY
	C....91	59.12.7512	5100 p	1%, 63V , PS	ANY
	C....92	59.05.2153	.015 u	2.5%, 40V , PP	ANY
	C....93	59.05.1222	2200 p	1%, 40V , PP	ANY
	C....94	59.05.1222	2200 p	1%, 40V , PP	ANY
	C....95	59.12.7821	820 p	1%, 40V , PS	ANY
	C....96	59.22.4221	220 u	-20%, 16V , EL	ANY
	C....97	59.34.2220	22 p	5%, 63V , CER , N150	ANY
	C....98	59.22.4221	220 u	-20%, 16V , EL	ANY
	C....99	59.05.1103	.01 u	1%, 40V , PP	ANY
	C...100	59.22.5101	100 u	-20%, 25V , EL	ANY
	C...101	59.34.2220	22 p	5%, 63V , CER , N150	ANY
	C...102	59.05.1103	.01 u	1%, 63V , PP	ANY
	C...103	59.34.2220	22 p	5%, 63V , CER , N150	ANY
	C...104	59.05.1103	.01 u	1%, 63V , PP	ANY
	C...105	59.06.0104	.1 u	10%, 40V , PETP	ANY
	C...106	59.06.0104	.1 u	10%, 40V , PETP	ANY
	C...107	59.06.0104	.1 u	10%, 40V , PETP	ANY
	C...108	59.06.0104	.1 u	10%, 40V , PETP	ANY
	C...109	59.06.0104	.1 u	10%, 40V , PETP	ANY
	C...110	59.06.0104	.1 u	10%, 40V , PETP	ANY
	C...111	59.06.0104	.1 u	10%, 40V , PETP	ANY
	C...113	59.05.1682	6800 p	1%, 40V , PP	ANY
	C...114	59.22.5470	47 u	-20%, 25V , EL	ANY
	C...115	59.22.5470	47 u	-20%, 25V , EL	ANY
	C...121	59.12.7512	5100 P	1%, 63V , PS	ANY
	C...122	59.05.2153	.015 u	2.5%, 40V , PP	ANY
	C...123	59.05.1222	2200 p	1%, 40V , PP	ANY
	C...124	59.05.1222	2200 p	1%, 40V , PP	ANY
	C...125	59.12.7821	820 p	1%, 40V , PS	ANY
	C...126	59.22.4221	220 u	-20%, 16V , EL	ANY
	C...127	59.34.2220	22 p	5%, 63V , CER , N150	ANY
	C...128	59.22.4221	220 u	-20%, 16V , EL	ANY
	C...129	59.05.1103	.01 u	1%, 40V , PP	ANY
	C...130	59.22.5101	100 u	-20%, 25V , EL	ANY
	C...131	59.34.2220	22 p	5%, 63V , CER , N150	ANY
	C...132	59.05.1103	.01 u	1%, 63V , PP	ANY

S T U D E R (00) 90/11/01 RA D/A CONVERTER PL 1.862.651.21 PAGE 3

IND.	POS.NO.	PART NO.	VALUE	SPECIFICATIONS / EQUIVALENT	MANUF.
	C...133	59.34.2220	22 p	5%, 63V , CER , N150	ANY
	C...134	59.05.1103	.01 u	1%, 63V , PP	ANY
	C...135	59.06.0104	.1 u	10%, 40V , PETP	ANY
	C...136	59.06.0104	.1 u	10%, 40V , PETP	ANY
	C...137	59.06.0104	.1 u	10%, 40V , PETP	ANY
	C...138	59.06.0104	.1 u	10%, 40V , PETP	ANY
	C...139	59.06.0104	.1 u	10%, 40V , PETP	ANY
	C...140	59.06.0104	.1 u	10%, 40V , PETP	ANY
	C...141	59.06.0104	.1 u	10%, 40V , PETP	ANY
	C...142	59.34.5471	470 p	5%, 40V , CER , N1500	ANY
	C...143	59.05.1682	6800 p	1%, 40V , PP	ANY
	C...144	59.22.5470	47 u	-20%, 25V , EL	ANY
	C...145	59.22.5470	47 u	-20%, 25V , EL	ANY
	C...151	59.12.7512	5100 p	1%, 63V , PS	ANY
	C...152	59.05.2153	.015 u	2.5%, 40V , PP	ANY
	C...153	59.05.1222	2200 p	1%, 40V , PP	ANY
	C...154	59.05.1222	2200 p	1%, 40V , PP	ANY
	C...155	59.12.7821	820 p	1%, 40V , PS	ANY
	C...156	59.22.4221	220 u	-20%, 16V , EL	ANY
	C...157	59.34.2220	22 p	5%, 63V , CER , N150	ANY
	C...158	59.22.4221	220 u	-20%, 16V , EL	ANY
	C...159	59.05.1103	.01 u	1%, 40V , PP	ANY
	C...160	59.22.5101	100 u	-20%, 25V , EL	ANY
	C...161	59.34.2220	22 p	5%, 63V , CER , N150	ANY
	C...162	59.05.1103	.01 u	1%, 63V , PP	ANY
	C...163	59.34.2220	22 p	5%, 63V , CER , N150	ANY
	C...164	59.05.1103	.01 u	1%, 63V , PP	ANY
	C...165	59.06.0104	.1 u	10%, 40V , PETP	ANY
	C...166	59.06.0104	.1 u	10%, 40V , PETP	ANY
	C...167	59.06.0104	.1 u	10%, 40V , PETP	ANY
	C...168	59.06.0104	.1 u	10%, 40V , PETP	ANY
	C...169	59.06.0104	.1 u	10%, 40V , PETP	ANY
	C...170	59.06.0104	.1 u	10%, 40V , PETP	ANY
	C...171	59.06.0104	.1 u	10%, 40V , PETP	ANY
	C...173	59.05.1682	6800 p	1%, 40V , PP	ANY
	C...174	59.22.5470	47 u	-20%, 25V , EL	ANY
	C...175	59.22.5470	47 u	-20%, 25V , EL	ANY

S T U D E R (00) 90/11/01 RA D/A CONVERTER PL 1.862.651.21 PAGE 4

IND.	POS.NO.	PART NO.	VALUE	SPECIFICATIONS / EQUIVALENT	MANUF.
	C...181	59.12.7512	5100 p	1%, 63V , PS	ANY
	C...182	59.05.2153	.015 u	2.5%, 40V , PP	ANY
	C...183	59.05.1222	2200 p	1%, 40V , PP	ANY
	C...184	59.05.1222	2200 p	1%, 40V , PP	ANY
	C...185	59.12.7821	820 p	1%, 40V , PS	ANY
	C...186	59.22.4221	220 u	-20%, 16V , EL	ANY
	C...187	59.34.2220	22 p	5%, 63V , CER , N150	ANY
	C...188	59.22.4221	220 u	-20%, 16V , EL	ANY
	C...189	59.05.1103	.01 u	1%, 40V , PP	ANY
	C...190	59.22.5101	100 u	-20%, 25V , EL	ANY
	C...191	59.34.2220	22 p	5%, 63V , CER , N150	ANY
	C...192	59.05.1103	.01 u	1%, 63V , PP	ANY
	C...193	59.34.2220	22 p	5%, 63V , CER , N150	ANY
	C...194	59.05.1103	.01 u	1%, 63V , PP	ANY
	C...195	59.06.0104	.1 u	10%, 40V , PETP	ANY
	C...196	59.06.0104	.1 u	10%, 40V , PETP	ANY
	C...197	59.06.0104	.1 u	10%, 40V , PETP	ANY
	C...198	59.06.0104	.1 u	10%, 40V , PETP	ANY
	C...199	59.06.0104	.1 u	10%, 40V , PETP	ANY
	C...200	59.06.0104	.1 u	10%, 40V , PETP	ANY
	C...201	59.06.0104	.1 u	10%, 40V , PETP	ANY
	C...202	59.34.5471	470 p	5%, 40V , CER , N1500	ANY
	C...203	59.05.1682	6800 p	1%, 40V , PP	ANY
	C...204	59.22.5470	47 u	-20%, 25V , EL	ANY
	C...205	59.22.5470	47 u	-20%, 25V , EL	ANY
	C...211	59.12.7512	5100 p	1%, 63V , PS	ANY
	C...212	59.05.2153	.015 u	2.5%, 40V , PP	ANY
	C...213	59.05.1222	2200 p	1%, 40V , PP	ANY
	C...214	59.05.1222	2200 p	1%, 40V , PP	ANY
	C...215	59.12.7821	820 p	1%, 40V , PS	ANY
	C...216	59.22.4221	220 u	-20%, 16V , EL	ANY
	C...217	59.34.2220	22 p	5%, 63V , CER , N150	ANY
	C...218	59.22.4221	220 u	-20%, 16V , EL	ANY
	C...219	59.05.1103	.01 u	1%, 40V , PP	ANY
	C...220	59.22.5101	100 u	-20%, 25V , EL	ANY
	C...221	59.34.2220	22 p	5%, 63V , CER , N150	ANY
	C...222	59.05.1103	.01 u	1%, 63V , PP	ANY

S T U D E R (00) 90/11/01 RA D/A CONVERTER PL 1.862.651.21 PAGE 5

IND.	POS.NO.	PART NO.	VALUE	SPECIFICATIONS / EQUIVALENT	MANUF.
	C...223	59.34.2220	22 p	5%, 63V , CER , N150	ANY
	C...224	59.05.1103	.01 u	1%, 63V , PP	ANY
	C...225	59.06.0104	.1 u	10%, 40V , PETP	ANY
	C...226	59.06.0104	.1 u	10%, 40V , PETP	ANY
	C...227	59.06.0104	.1 u	10%, 40V , PETP	ANY
	C...228	59.06.0104	.1 u	10%, 40V , PETP	ANY
	C...229	59.06.0104	.1 u	10%, 40V , PETP	ANY
	C...230	59.06.0104	.1 u	10%, 40V , PETP	ANY
	C...231	59.06.0104	.1 u	10%, 40V , PETP	ANY
	C...233	59.05.1682	6800 p	1%, 40V , PP	ANY
	C...234	59.22.5470	47 u	-20%, 25V , EL	ANY
	C...235	59.22.5470	47 u	-20%, 25V , EL	ANY
	C...238	59.06.0683	.068 u	10%, 63V , PETP	ANY
	C...239	59.22.5470	47 u	-20%, 25V , EL	ANY
	C...240	59.06.0683	.068 u	10%, 63V , PETP	ANY
	C...241	59.22.5470	47 u	-20%, 25V , EL	ANY
	C...242	59.06.0683	.068 u	10%, 63V , PETP	ANY
	C...243	59.22.5470	47 u	-20%, 25V , EL	ANY
	C...244	59.06.0683	.068 u	10%, 63V , PETP	ANY
	C...245	59.22.5470	47 u	-20%, 25V , EL	ANY
	C...246	59.06.0683	.068 u	10%, 63V , PETP	ANY
	C...247	59.06.0683	.068 u	10%, 63V , PETP	ANY
	C...248	59.22.3471	470 u	-20%, 10V , EL	ANY
	C...249	59.06.0683	.068 u	10%, 63V , PETP	ANY
	C...250	59.22.5101	100 u	-20%, 25V , EL	ANY
	C...251	59.22.5470	47 u	-20%, 25V , EL	ANY
	C...252	59.22.5470	47 u	-20%, 25V , EL	ANY
	C...253	59.22.5470	47 u	-20%, 25V , EL	ANY
	C...254	59.22.5470	47 u	-20%, 25V , EL	ANY
	C...255	59.06.0104	.1 u	10%, 63V , PETP	ANY
	C.1001	59.06.0683	.068 u	10%, 63V , PETP =B 1	ANY
	C.1002	59.06.0683	.068 u	10%, 63V , PETP =B 2	ANY
	C.1003	59.06.0683	.068 u	10%, 63V , PETP =B 3	ANY
	C.1004	59.06.0683	.068 u	10%, 63V , PETP =B 4	ANY
	C.1005	59.06.0683	.068 u	10%, 63V , PETP =B 5	ANY
	C.1006	59.06.0683	.068 u	10%, 63V , PETP =B 6	ANY
	C.1007	59.06.0683	.068 u	10%, 63V , PETP =B 7	ANY

S T U D E R (00) 90/11/01 RA D/A CONVERTER PL 1.862.651.21 PAGE 6

D/A CONVERTER 1.862.651.21

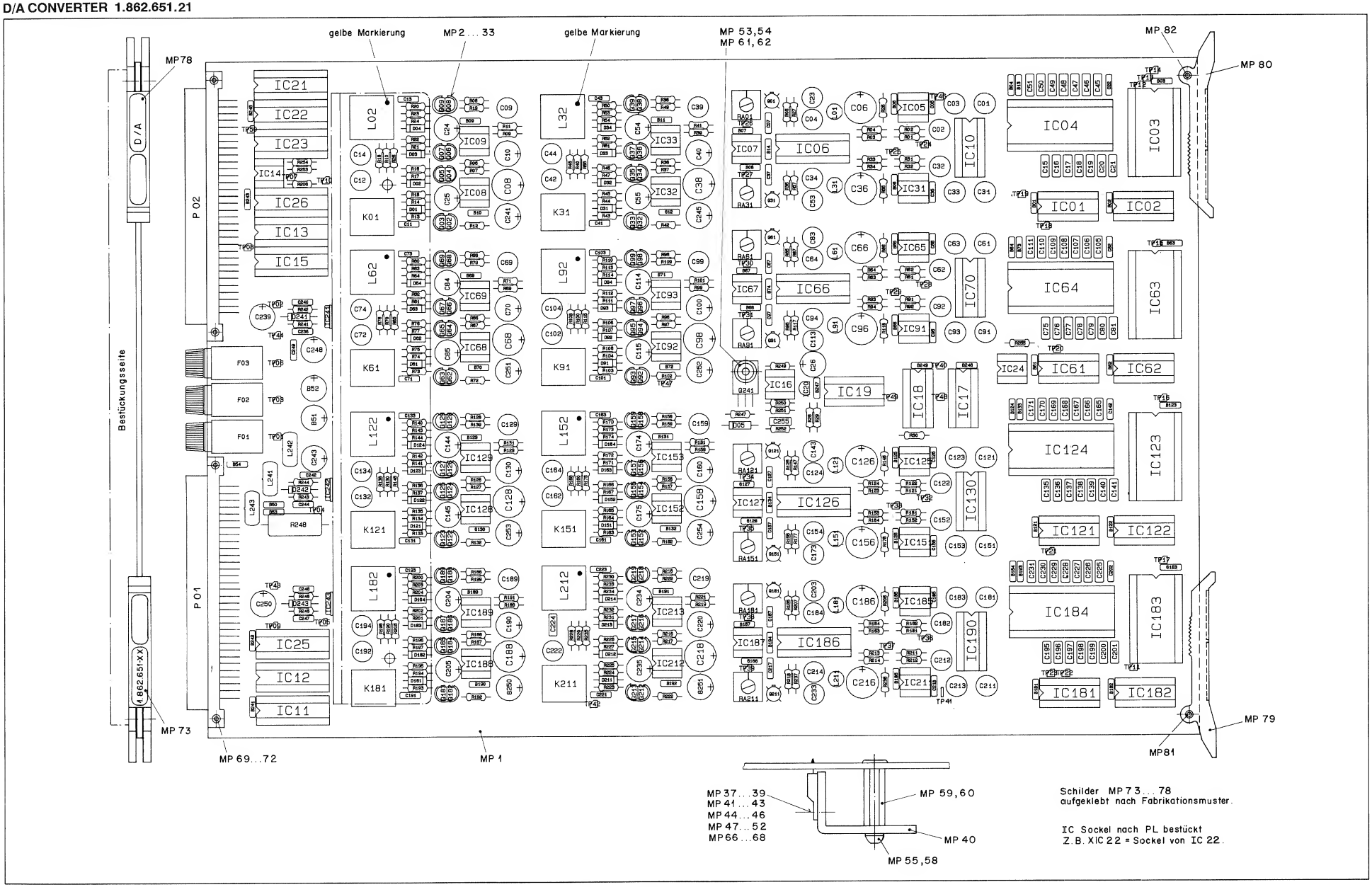

D/A CONVERTER 1.862.651.21 PART II

IND.	POS.NO.	PART NO.	VALUE	SPECIFICATIONS / EQUIVALENT	MANUF.
	C..1008	59.06.0683	.068 u	10%, 63V , PETP =B 8	ANY
	C..1009	59.06.0683	.068 u	10%, 63V , PETP =B 9	ANY
	C..1010	59.06.0683	.068 u	10%, 63V , PETP =B 10	ANY
	C..1011	59.06.0683	.068 u	10%, 63V , PETP =B 11	ANY
	C..1012	59.06.0683	.068 u	10%, 63V , PETP =B 12	ANY
	C..1013	59.06.0683	.068 u	10%, 63V , PETP =B 13	ANY
	C..1014	59.06.0683	.068 u	10%, 63V , PETP =B 14	ANY
	C..1050	59.06.0683	.068 u	10%, 63V , PETP =B 50	ANY
	C..1051	59.22.5221	220 u	-20%, 25V , EL =B 51	ANY
	C..1052	59.22.5221	220 u	-20%, 25V , EL =B 52	ANY
	C..1053	59.06.0683	.068 u	10%, 63V , PETP =B 53	ANY
	C..1054	59.06.0683	.068 u	10%, 63V , PETP =B 54	ANY
	C..1061	59.06.0683	.068 u	10%, 63V , PETP =B 61	ANY
	C..1062	59.06.0683	.068 u	10%, 63V , PETP =B 62	ANY
	C..1063	59.06.0683	.068 u	10%, 63V , PETP =B 63	ANY
	C..1064	59.06.0683	.068 u	10%, 63V , PETP =B 64	ANY
	C..1065	59.06.0683	.068 u	10%, 63V , PETP =B 65	ANY
	C..1066	59.06.0683	.068 u	10%, 63V , PETP =B 66	ANY
	C..1067	59.06.0683	.068 u	10%, 63V , PETP =B 67	ANY
	C..1068	59.06.0683	.068 u	10%, 63V , PETP =B 68	ANY
	C..1069	59.06.0683	.068 u	10%, 63V , PETP =B 69	ANY
	C..1070	59.06.0683	.068 u	10%, 63V , PETP =B 70	ANY
	C..1071	59.06.0683	.068 u	10%, 63V , PETP =B 71	ANY
	C..1072	59.06.0683	.068 u	10%, 63V , PETP =B 72	ANY
	C..1073	59.06.0683	.068 u	10%, 63V , PETP =B 73	ANY
	C..1074	59.06.0683	.068 u	10%, 63V , PETP =B 74	ANY
	C..1121	59.06.0683	.068 u	10%, 63V , PETP =B 121	ANY
	C..1122	59.06.0683	.068 u	10%, 63V , PETP =B 122	ANY
	C..1123	59.06.0683	.068 u	10%, 63V , PETP =B 123	ANY
	C..1124	59.06.0683	.068 u	10%, 63V , PETP =B 124	ANY
	C..1125	59.06.0683	.068 u	10%, 63V , PETP =B 125	ANY
	C..1126	59.06.0683	.068 u	10%, 63V , PETP =B 126	ANY
	C..1127	59.06.0683	.068 u	10%, 63V , PETP =B 127	ANY
	C..1128	59.06.0683	.068 u	10%, 63V , PETP =B 128	ANY
	C..1129	59.06.0683	.068 u	10%, 63V , PETP =B 129	ANY
	C..1130	59.06.0683	.068 u	10%, 63V , PETP =B 130	ANY
	C..1131	59.06.0683	.068 u	10%, 63V , PETP =B 131	ANY

IND.	POS.NO.	PART NO.	VALUE	SPECIFICATIONS / EQUIVALENT	MANUF.
	C..1132	59.06.0683	.068 u	10%, 63V , PETP =B 132	ANY
	C..1133	59.06.0683	.068 u	10%, 63V , PETP =B 133	ANY
	C..1134	59.06.0683	.068 u	10%, 63V , PETP =B 134	ANY
	C..1181	59.06.0683	.068 u	10%, 63V , PETP =B 181	ANY
	C..1182	59.06.0683	.068 u	10%, 63V , PETP =B 182	ANY
	C..1183	59.06.0683	.068 u	10%, 63V , PETP =B 183	ANY
	C..1184	59.06.0683	.068 u	10%, 63V , PETP =B 184	ANY
	C..1185	59.06.0683	.068 u	10%, 63V , PETP =B 185	ANY
	C..1186	59.06.0683	.068 u	10%, 63V , PETP =B 186	ANY
	C..1187	59.06.0683	.068 u	10%, 63V , PETP =B 187	ANY
	C..1188	59.06.0683	.068 u	10%, 63V , PETP =B 188	ANY
	C..1189	59.06.0683	.068 u	10%, 63V , PETP =B 189	ANY
	C..1190	59.06.0683	.068 u	10%, 63V , PETP =B 190	ANY
	C..1191	59.06.0683	.068 u	10%, 63V , PETP =B 191	ANY
	C..1192	59.06.0683	.068 u	10%, 63V , PETP =B 192	ANY
	C..1193	59.06.0683	.068 u	10%, 63V , PETP =B 193	ANY
	C..1194	59.06.0683	.068 u	10%, 63V , PETP =B 194	ANY
	C..1241	59.06.0683	.068 u	10%, 63V , PETP =B 241	ANY
	C..1242	59.06.0683	.068 u	10%, 63V , PETP =B 242	ANY
	C..1243	59.06.0683	.068 u	10%, 63V , PETP =B 243	ANY
	C..1245	59.06.0683	.068 u	10%, 63V , PETP =B 245	ANY
	C..1247	59.06.0683	.068 u	10%, 63V , PETP =B 247	ANY
	C..1248	59.06.0683	.068 u	10%, 63V , PETP =B 248	ANY
	C..1249	59.06.0683	.068 u	10%, 63V , PETP =B 249	ANY
	C..1250	59.22.5470	47 u	-20%, 25V , EL =B 250	ANY
	C..1251	59.22.5470	47 u	-20%, 25V , EL =B 251	ANY
	D.....1	50.04.0125	1N 4448		ANY
	D.....2	50.04.0125	1N 4448		ANY
	D.....3	50.04.0125	1N 4448		ANY
	D.....4	50.04.0125	1N 4448		ANY
	D.....5	50.04.0122	1N 4001		ANY
	D....31	50.04.0125	1N 4448		ANY
	D....32	50.04.0125	1N 4448		ANY
	D....33	50.04.0125	1N 4448		ANY
	D....34	50.04.0125	1N 4448		ANY
	D....61	50.04.0125	1N 4448		ANY

IND.	POS.NO.	PART NO.	VALUE	SPECIFICATIONS / EQUIVALENT	MANUF.
	D....62	50.04.0125	1N 4448		ANY
	D....63	50.04.0125	1N 4448		ANY
	D....64	50.04.0125	1N 4448		ANY
	D....91	50.04.0125	1N 4448		ANY
	D....92	50.04.0125	1N 4448		ANY
	D....93	50.04.0125	1N 4448		ANY
	D....94	50.04.0125	1N 4448		ANY
	D...121	50.04.0125	1N 4448		ANY
	D...122	50.04.0125	1N 4448		ANY
	D...123	50.04.0125	1N 4448		ANY
	D...124	50.04.0125	1N 4448		ANY
	D...151	50.04.0125	1N 4448		ANY
	D...152	50.04.0125	1N 4448		ANY
	D...153	50.04.0125	1N 4448		ANY
	D...154	50.04.0125	1N 4448		ANY
	D...181	50.04.0125	1N 4448		ANY
	D...182	50.04.0125	1N 4448		ANY
	D...183	50.04.0125	1N 4448		ANY
	D...184	50.04.0125	1N 4448		ANY
	D...211	50.04.0125	1N 4448		ANY
	D...212	50.04.0125	1N 4448		ANY
	D...213	50.04.0125	1N 4448		ANY
	D...214	50.04.0125	1N 4448		ANY
	D...241	50.04.0122	1N 4001		ANY
	D...242	50.04.0122	1N 4001		ANY
	D...243	50.04.0122	1N 4001		ANY
	F.....1	51.01.0117		T1A / 250V,5*20mm	ANY
	F.....2	51.01.0117		T1A / 250V,5*20mm	ANY
	F.....3	51.99.0133		MINIFUSE 7A	ANY
	IC....1	50.17.1597		74 HC 597	ANY
	IC....2	50.17.1597		74 HC 597	ANY
	IC....3	50.13.0119		SAA 7220 P/A	Ph
	IC....4	50.19.0108		TDA 1541 A - S1	Ph
	IC....5	50.09.0106		NE 5532 AN, XR 5532 AN	ANY
	IC....6	50.07.0037		AD 7528 IN	Ad

IND.	POS.NO.	PART NO.	VALUE	SPECIFICATIONS / EQUIVALENT	MANUF.
	IC....7	50.09.0106		NE 5532 AN, XR 5532 AN	ANY
	IC....8	50.09.0106		NE 5532 AN, XR 5532 AN	ANY
	IC....9	50.09.0106		NE 5532 AN, XR 5532 AN	ANY
	IC...10	50.17.0101		ADG 201 HSKN	AD
	IC...11	50.17.0541		74 HCT 541	ANY
	IC...12	50.17.0541		74 HCT 541	ANY
	IC...13	50.21.0374		74 F 374	ANY
	IC...14	50.15.0114		UA 9637 ACP, 9637 ATC	ANY
	IC...15	50.18.0100		GAL 16 V 8 - 25 LP (SW 1.862.907.21)	ANY
	IC...16	50.11.0114		LM 311 N LM 311 P	ANY
	IC...17	50.17.1594		74 HC 594	ANY
	IC...18	50.17.1594		74 HC 594	ANY
	IC...19	50.17.1594		74 HC 594	ANY
	IC...20	50.10.0108		LM317	ANY
	IC...21	50.17.0574		74 HCT 574	ANY
	IC...22	50.14.0114		28L 22N, 63 S 281 N (SW 1.862.905.21)	ANY
	IC...23	50.18.0100		GAL 16 V 8 - 25 LP (SW 1.862.906.20)	ANY
	IC...24	50.15.0114		UA 9637 ACP, 9637 ATC	ANY
	IC...25	50.17.0541		74 HCT 541	ANY
	IC...26	50.21.0244		74 F 244	ANY
	IC...31	50.09.0106		NE 5532 AN, XR 5532 AN	ANY
	IC...32	50.09.0106		NE 5532 AN, XR 5532 AN	ANY
	IC...33	50.09.0106		NE 5532 AN, XR 5532 AN	ANY
	IC...61	50.17.1597		74 HC 597	ANY
	IC...62	50.17.1597		74 HC 597	ANY
	IC...63	50.13.0119		SAA 7220 P/A	Ph
	IC...64	50.19.0108		TDA 1541 A - S1	Ph
	IC...65	50.09.0106		NE 5532 AN, XR 5532 AN	ANY
	IC...66	50.07.0037		AD 7528 AN	Ad
	IC...67	50.09.0106		NE 5532 AN, XR 5532 AN	ANY
	IC...68	50.09.0106		NE 5532 AN, XR 5532 AN	ANY
	IC...69	50.09.0106		NE 5532 AN, XR 5532 AN	ANY
	IC...70	50.17.0101		ADG 201 HSKN	AD
	IC...91	50.09.0106		NE 5532 AN, XR 5532 AN	ANY
	IC...92	50.09.0106		NE 5532 AN, XR 5532 AN	ANY
	IC...93	50.09.0106		NE 5532 AN, XR 5532 AN	ANY
	IC..121	50.17.1597		74 HC 597	ANY

IND.	POS.NO.	PART NO.	VALUE	SPECIFICATIONS / EQUIVALENT	MANUF.
	IC..122	50.17.1597		74 HC 597	ANY
	IC..123	50.13.0119		SAA 7220 P/A	Ph
	IC..124	50.19.0108		TDA 1541 A - S1	Ph
	IC..125	50.09.0106		NE 5532 AN, XR 5532 AN	ANY
	IC..126	50.07.0037		AD 7528 IN	Ad
	IC..127	50.09.0106		NE 5532 AN, XR 5532 AN	ANY
	IC..128	50.09.0106		NE 5532 AN, XR 5532 AN	ANY
	IC..129	50.09.0106		NE 5532 AN, XR 5532 AN	ANY
	IC..130	50.17.0101		ADG 201 HSKN	AD
	IC..151	50.09.0106		NE 5532 AN, XR 5532 AN	ANY
	IC..152	50.09.0106		NE 5532 AN, XR 5532 AN	ANY
	IC..153	50.09.0106		NE 5532 AN, XR 5532 AN	ANY
	IC..181	50.17.1597		74 HC 597	ANY
	IC..182	50.17.1597		74 HC 597	ANY
	IC..183	50.13.0119		SAA 7220 P/A	Ph
	IC..184	50.19.0108		TDA 1541 A - S1	Ph
	IC..185	50.09.0106		NE 5532 AN, XR 5532 AN	ANY
	IC..186	50.07.0037		AD 7528 IN	Ad
	IC..187	50.09.0106		NE 5532 AN, XR 5532 AN	ANY
	IC..188	50.09.0106		NE 5532 AN, XR 5532 AN	ANY
	IC..189	50.09.0106		NE 5532 AN, XR 5532 AN	ANY
	IC..190	50.17.0101		ADG 201 HSKN	AD
	IC..211	50.09.0106		NE 5532 AN, XR 5532 AN	ANY
	IC..212	50.09.0106		NE 5532 AN, XR 5532 AN	ANY
	IC..213	50.09.0106		NE 5532 AN, XR 5532 AN	ANY
	IC..241	50.10.0104		LM 317	ANY
	IC..242	50.10.0105		LM 337	ANY
	IC..243	50.10.0105		LM 337	ANY
	K.....1	56.04.0170	5 V	100V/0.5A, AG/AU	ANY
	K....31	56.04.0170	5 V	100V/0.5A, AG/AU	ANY
	K....61	56.04.0170	5 V	100V/0.5A, AG/AU	ANY
	K....91	56.04.0170	5 V	100V/0.5A, AG/AU	ANY
	K...121	56.04.0170	5 V	100V/0.5A, AG/AU	ANY
	K...151	56.04.0170	5 V	100V/0.5A, AG/AU	ANY
	K...181	56.04.0170	5 V	100V/0.5A, AG/AU	ANY
	K...211	56.04.0170	5 V	100V/0.5A, AG/AU	ANY

IND.	POS.NO.	PART NO.	VALUE	SPECIFICATIONS / EQUIVALENT	MANUF.
	L.....1	62.02.3471	470 u	10%, RAD., RM 5	ANY
	L.....2	1.022.275.00		TRIFILAR TRANSFORMER	St
	L....31	62.02.3471	470 u	10%, RAD., RM 5	ANY
	L....32	1.022.275.00		TRIFILAR TRANSFORMER	St
	L....61	62.02.3471	470 u	10%, RAD., RM 5	ANY
	L....62	1.022.275.00		TRIFILAR TRANSFORMER	St
	L....91	62.02.3471	470 u	10%, RAD., RM 5	ANY
	L....92	1.022.275.00		TRIFILAR TRANSFORMER	St
	L...121	62.02.3471	470 u	10%, RAD., RM 5	ANY
	L...122	1.022.275.00		TRIFILAR TRANSFORMER	St
	L...151	62.02.3471	470 u	10%, RAD., RM 5	ANY
	L...152	1.022.275.00		TRIFILAR TRANSFORMER	St
	L...181	62.02.3471	470 u	10%, RAD., RM 5	ANY
	L...182	1.022.275.00		TRIFILAR TRANSFORMER	St
	L...211	62.02.3471	470 u	10%, RAD., RM 5	ANY
	L...212	1.022.275.00		TRIFILAR TRANSFORMER	St
	L...241	62.03.0010		WIDEBAND-HF-CHOKE	ANY
	L...242	62.03.0010		WIDEBAND-HF-CHOKE	ANY
	L...243	62.03.0010		WIDEBAND-HF-CHOKE	ANY
	MP....1	1.862.651.11		PCB	St
	MP....2	50.20.2001		CLIP 2 * TO 92	ANY
	MP....3	50.20.2001		CLIP 2 * TO 92	ANY
	MP....4	50.20.2001		CLIP 2 * TO 92	ANY
	MP....5	50.20.2001		CLIP 2 * TO 92	ANY
	MP....6	50.20.2001		CLIP 2 * TO 92	ANY
	MP....7	50.20.2001		CLIP 2 * TO 92	ANY
	MP....8	50.20.2001		CLIP 2 * TO 92	ANY
	MP....9	50.20.2001		CLIP 2 * TO 92	ANY
	MP...10	50.20.2001		CLIP 2 * TO 92	ANY
	MP...11	50.20.2001		CLIP 2 * TO 92	ANY
	MP...12	50.20.2001		CLIP 2 * TO 92	ANY
	MP...13	50.20.2001		CLIP 2 * TO 92	ANY
	MP...14	50.20.2001		CLIP 2 * TO 92	ANY
	MP...15	50.20.2001		CLIP 2 * TO 92	ANY
	MP...16	50.20.2001		CLIP 2 * TO 92	ANY
	MP...17	50.20.2001		CLIP 2 * TO 92	ANY

IND.	POS.NO.	PART NO.	VALUE	SPECIFICATIONS / EQUIVALENT	MANUF.
	MP...18	50.20.2001		CLIP 2 * TO 92	ANY
	MP...19	50.20.2001		CLIP 2 * TO 92	ANY
	MP...20	50.20.2001		CLIP 2 * TO 92	ANY
	MP...21	50.20.2001		CLIP 2 * TO 92	ANY
	MP...22	50.20.2001		CLIP 2 * TO 92	ANY
	MP...23	50.20.2001		CLIP 2 * TO 92	ANY
	MP...24	50.20.2001		CLIP 2 * TO 92	ANY
	MP...25	50.20.2001		CLIP 2 * TO 92	ANY
	MP...26	50.20.2001		CLIP 2 * TO 92	ANY
	MP...27	50.20.2001		CLIP 2 * TO 92	ANY
	MP...28	50.20.2001		CLIP 2 * TO 92	ANY
	MP...29	50.20.2001		CLIP 2 * TO 92	ANY
	MP...30	50.20.2001		CLIP 2 * TO 92	ANY
	MP...31	50.20.2001		CLIP 2 * TO 92	ANY
	MP...32	50.20.2001		CLIP 2 * TO 92	ANY
	MP...33	50.20.2001		CLIP 2 * TO 92	ANY
	MP...37	50.20.0404		INSULATING TUBE	ANY
	MP...38	50.20.0404		INSULATING TUBE	ANY
	MP...39	50.20.0404		INSULATING TUBE	ANY
	MP...40	1.862.651.02		HEAT SINK	St
	MP...41	21.53.0356		CYLIN.SCREW, M3*10	ANY
	MP...42	21.53.0356		CYLIN.SCREW, M3*10	ANY
	MP...43	21.53.0356		CYLIN.SCREW, M3*10	ANY
	MP...44	1.010.006.50		SPRING WASHER TO TO220	ANY
	MP...45	1.010.006.50		SPRING WASHER TO TO220	ANY
	MP...46	1.010.006.50		SPRING WASHER TO TO220	ANY
	MP...47	37.01.0101		LOCK WASHER D 3.2/ 8 * 0.3	ANY
	MP...48	37.01.0101		LOCK WASHER D 3.2/ 8 * 0.3	ANY
	MP...49	37.01.0101		LOCK WASHER D 3.2/ 8 * 0.3	ANY
	MP...50	37.01.0101		LOCK WASHER D 3.2/ 8 * 0.3	ANY
	MP...51	37.01.0101		LOCK WASHER D 3.2/ 8 * 0.3	ANY
	MP...52	37.01.0101		LOCK WASHER D 3.2/ 8 * 0.3	ANY
	MP...53	37.01.0101		LOCK WASHER D 3.2/ 8 * 0.3	ANY
	MP...54	37.01.0101		LOCK WASHER D 3.2/ 8 * 0.3	ANY
	MP...55	21.51.8356		SCREW NI , M 3 * 10	ANY
	MP...56	21.51.8356		SCREW NI , M 3 * 10	ANY
	MP...57	24.16.1030		FIN WASHER, D 3.2/5.5	ANY

IND.	POS.NO.	PART NO.	VALUE	SPECIFICATIONS / EQUIVALENT	MANUF.
	MP...58	24.16.1030		FIN WASHER, D 3.2/5.5	ANY
	MP...59	1.010.043.22		RIVETING NUT M 3 * 20	ANY
	MP...60	1.010.043.22		RIVETING NUT M 3 * 20	ANY
	MP...61	1.010.017.22		RIVETING NUT M 3 * 6	ANY
	MP...62	21.53.0355		CYLIN. SCREW, M 3 * 8	ANY
	MP...66	50.20.0305		MICA INSULATOR TO TO220	ANY
	MP...67	50.20.0305		MICA INSULATOR TO TO220	ANY
	MP...68	50.20.0305		MICA INSULATOR TO TO220	ANY
	MP...69	28.99.0119		RIVETING NUT, D2.5*0.15*10	ANY
	MP...70	28.99.0119		RIVETING NUT, D2.5*0.15*10	ANY
	MP...71	28.99.0119		RIVETING NUT, D2.5*0.15*10	ANY
	MP...72	28.99.0119		RIVETING NUT, D2.5*0.15*10	ANY
	MP...73	1.862.651.01		LABEL	St
	MP...74	43.01.0108		ESE-LABEL	ANY
	MP...75	1.010.115.51		LABEL T1A	St
	MP...76	1.010.115.51		LABEL T1A	St
	MP...77	1.010.130.51		TEXT-ETIK. 5*20 (F7.00A)	ST
	MP...78	1.862.651.03		LABEL D/A	ST
	MP...79	1.862.650.05		AUSWERFERHEBEL	ST
	MP...80	1.862.650.05		AUSWERFERHEBEL	ST
	MP...81	1.862.650.06		AUSWERFERSTIFT	ST
	MP...82	1.862.650.06		AUSWERFERSTIFT	ST
	P.....1	54.01.0358		CONNECTOR 3 * 32 EURO PRINT	ANY
	P.....2	54.01.0358		CONNECTOR 3 * 32 EURO PRINT	ANY
	Q.....1	50.11.0106		SD 214-DE,BSD 214	ANY
	Q.....2	50.43.0516		BC 337	ANY
	Q.....3	50.43.0516		BC 337	ANY
	Q.....4	50.43.0625		BC 327	ANY
	Q.....5	50.43.0625		BC 327	ANY
	Q.....6	50.43.0516		BC 337	ANY
	Q.....7	50.43.0516		BC 337	ANY
	Q.....8	50.43.0625		BC 327	ANY
	Q.....9	50.43.0625		BC 327	ANY
	Q....31	50.11.0106		SD 214-DE,BSD 214	ANY
	Q....32	50.43.0516		BC 337	ANY

IND.	POS.NO.	PART NO.	VALUE	SPECIFICATIONS / EQUIVALENT	MANUF.
	Q....33	50.43.0516		BC 337	ANY
	Q....34	50.43.0625		BC 327	ANY
	Q....35	50.43.0625		BC 327	ANY
	Q....36	50.43.0516		BC 337	ANY
	Q....37	50.43.0516		BC 337	ANY
	Q....38	50.43.0625		BC 327	ANY
	Q....39	50.43.0625		BC 327	ANY
	Q....61	50.11.0106		SD 214-DE,BSD 214	ANY
	Q....62	50.43.0516		BC 337	ANY
	Q....63	50.43.0516		BC 337	ANY
	Q....64	50.43.0625		BC 327	ANY
	Q....65	50.43.0625		BC 327	ANY
	Q....66	50.43.0516		BC 337	ANY
	Q....67	50.43.0516		BC 337	ANY
	Q....68	50.43.0625		BC 327	ANY
	Q....69	50.43.0625		BC 327	ANY
	Q....91	50.11.0106		SD 214-DE,BSD 214	ANY
	Q....92	50.43.0516		BC 337	ANY
	Q....93	50.43.0516		BC 337	ANY
	Q....94	50.43.0625		BC 327	ANY
	Q....95	50.43.0625		BC 327	ANY
	Q....96	50.43.0516		BC 337	ANY
	Q....97	50.43.0516		BC 337	ANY
	Q....98	50.43.0625		BC 327	ANY
	Q....99	50.43.0625		BC 327	ANY
	Q...121	50.11.0106		SD 214-DE,BSD 214	ANY
	Q...122	50.43.0516		BC 337	ANY
	Q...123	50.43.0516		BC 337	ANY
	Q...124	50.43.0625		BC 327	ANY
	Q...125	50.43.0625		BC 327	ANY
	Q...126	50.43.0516		BC 337	ANY
	Q...127	50.43.0516		BC 337	ANY
	Q...128	50.43.0625		BC 327	ANY
	Q...129	50.43.0625		BC 327	ANY
	Q...151	50.11.0106		SD 214-DE,BSD 214	ANY
	Q...152	50.43.0516		BC 337	ANY
	Q...153	50.43.0516		BC 337	ANY

IND.	POS.NO.	PART NO.	VALUE	SPECIFICATIONS / EQUIVALENT	MANUF.
	Q...154	50.43.0625		BC 327	ANY
	Q...155	50.43.0625		BC 327	ANY
	Q...156	50.43.0516		BC 337	ANY
	Q...157	50.43.0516		BC 337	ANY
	Q...158	50.43.0625		BC 327	ANY
	Q...159	50.43.0625		BC 327	ANY
	Q...181	50.11.0106		SD 214-DE,BSD 214	ANY
	Q...182	50.43.0516		BC 337	ANY
	Q...183	50.43.0516		BC 337	ANY
	Q...184	50.43.0625		BC 327	ANY
	Q...185	50.43.0625		BC 327	ANY
	Q...186	50.43.0516		BC 337	ANY
	Q...187	50.43.0516		BC 337	ANY
	Q...188	50.43.0625		BC 327	ANY
	Q...189	50.43.0625		BC 327	ANY
	Q...211	50.11.0106		SD 214-DE,BSD 214	ANY
	Q...212	50.43.0516		BC 337	ANY
	Q...213	50.43.0516		BC 337	ANY
	Q...214	50.43.0625		BC 327	ANY
	Q...215	50.43.0625		BC 327	ANY
	Q...216	50.43.0516		BC 337	ANY
	Q...217	50.43.0516		BC 337	ANY
	Q...218	50.43.0625		BC 327	ANY
	Q...219	50.43.0625		BC 327	ANY
	Q...241	50.03.0504		BD 679 MJE 802 -803	ANY
	R.....1	57.11.3911	910 E	1%, 0207 , MF	ANY
	R.....2	57.11.3182	1.8 k	1%, 0207 , MF	ANY
	R.....3	57.11.3242	2.4 k	1%, 0207 , MF	ANY
	R.....4	57.11.3242	2.4 k	1%, 0207 , MF	ANY
	R.....5	57.11.3222	2.2 K	1%, 0207 , MF	ANY
	R.....6	57.11.3472	4.7 k	1%, 0207 , MF	ANY
	R.....7	57.11.3472	4.7 k	1%, 0207 , MF	ANY
	R.....8	57.11.3472	4.7 k	1%, 0207 , MF	ANY
	R.....9	57.11.3472	4.7 k	1%, 0207 , MF	ANY
	R....10	57.11.3131	130 E	1%, 0207 , MF	ANY
	R....11	57.11.3121	120 E	1%, 0207 , MF	ANY

IND.	POS.NO.	PART NO.	VALUE	SPECIFICATIONS / EQUIVALENT	MANUF.
	R....12	57.11.3103	10 k	1%, 0207 , MF	ANY
	R....13	57.11.3103	10 k	1%, 0207 , MF	ANY
	R....14	57.11.3103	10 k	1%, 0207 , MF	ANY
	R....15	57.11.3100	10 E	1%, 0207 , MF	ANY
	R....16	57.11.3100	10 E	1%, 0207 , MF	ANY
	R....17	57.11.3103	10 k	1%, 0207 , MF	ANY
	R....18	57.11.3120	12 E	1%, 0207 , MF	ANY
	R....19	57.11.3103	10 k	1%, 0207 , MF	ANY
	R....20	57.11.3103	10 k	1%, 0207 , MF	ANY
	R....21	57.11.3103	10 k	1%, 0207 , MF	ANY
	R....22	57.11.3100	10 E	1%, 0207 , MF	ANY
	R....23	57.11.3100	10 E	1%, 0207 , MF	ANY
	R....24	57.11.3103	10 k	1%, 0207 , MF	ANY
	R....25	57.11.3120	12 E	1%, 0207 , MF	ANY
	R....26	57.11.5106	10 M	5%, 0207 , MF	ANY
	R....27	57.11.5225	2.2 M	5%, 0207 , MF	ANY
	R....28	57.11.3151	150 E	1%, 0207 , MF	ANY
	R....29	57.11.3471	470 E	1% 0207 , MF	ANY
	R....30	57.11.3102	1 K	1% 0207 , MF	ANY
	R....31	57.11.3911	910 E	1%, 0207 , MF	ANY
	R....32	57.11.3182	1.8 k	1%, 0207 , MF	ANY
	R....33	57.11.3242	2.4 k	1%, 0207 , MF	ANY
	R....34	57.11.3242	2.4 k	1%, 0207 , MF	ANY
	R....35	57.11.3222	2.2 K	1%, 0207 , MF	ANY
	R....36	57.11.3472	4.7 k	1%, 0207 , MF	ANY
	R....37	57.11.3472	4.7 k	1%, 0207 , MF	ANY
	R....38	57.11.3472	4.7 k	1%, 0207 , MF	ANY
	R....39	57.11.3472	4.7 k	1%, 0207 , MF	ANY
	R....40	57.11.3131	130 E	1%, 0207 , MF	ANY
	R....41	57.11.3121	120 E	1%, 0207 , MF	ANY
	R....42	57.11.3103	10 k	1%, 0207 , MF	ANY
	R....43	57.11.3103	10 k	1%, 0207 , MF	ANY
	R....44	57.11.3103	10 k	1%, 0207 , MF	ANY
	R....45	57.11.3100	10 E	1%, 0207 , MF	ANY
	R....46	57.11.3100	10 E	1%, 0207 , MF	ANY
	R....47	57.11.3103	10 k	1%, 0207 , MF	ANY
	R....48	57.11.3120	12 E	1%, 0207 , MF	ANY

IND.	POS.NO.	PART NO.	VALUE	SPECIFICATIONS / EQUIVALENT	MANUF.
	R....49	57.11.3103	10 k	1%, 0207 , MF	ANY
	R....50	57.11.3103	10 k	1%, 0207 , MF	ANY
	R....51	57.11.3103	10 k	1%, 0207 , MF	ANY
	R....52	57.11.3100	10 E	1%, 0207 , MF	ANY
	R....53	57.11.3100	10 E	1%, 0207 , MF	ANY
	R....54	57.11.3103	10 k	1%, 0207 , MF	ANY
	R....55	57.11.3120	12 E	1%, 0207 , MF	ANY
	R....56	57.11.5106	10 M	5%, 0207 , MF	ANY
	R....57	57.11.5225	2.2 M	5%, 0207 , MF	ANY
	R....61	57.11.3911	910 E	1%, 0207 , MF	ANY
	R....62	57.11.3182	1.8 k	1%, 0207 , MF	ANY
	R....63	57.11.3242	2.4 k	1%, 0207 , MF	ANY
	R....64	57.11.3242	2.4 k	1%, 0207 , MF	ANY
	R....65	57.11.3222	2.2 K	1%, 0207 , MF	ANY
	R....66	57.11.3472	4.7 k	1%, 0207 , MF	ANY
	R....67	57.11.3472	4.7 k	1%, 0207 , MF	ANY
	R....68	57.11.3472	4.7 k	1%, 0207 , MF	ANY
	R....69	57.11.3472	4.7 k	1%, 0207 , MF	ANY
	R....70	57.11.3131	130 E	1%, 0207 , MF	ANY
	R....71	57.11.3121	120 E	1%, 0207 , MF	ANY
	R....72	57.11.3103	10 k	1%, 0207 , MF	ANY
	R....73	57.11.3103	10 k	1%, 0207 , MF	ANY
	R....74	57.11.3103	10 k	1%, 0207 , MF	ANY
	R....75	57.11.3100	10 E	1%, 0207 , MF	ANY
	R....76	57.11.3100	10 E	1%, 0207 , MF	ANY
	R....77	57.11.3103	10 k	1%, 0207 , MF	ANY
	R....78	57.11.3120	12 E	1%, 0207 , MF	ANY
	R....79	57.11.3103	10 k	1%, 0207 , MF	ANY
	R....80	57.11.3103	10 k	1%, 0207 , MF	ANY
	R....81	57.11.3103	10 k	1%, 0207 , MF	ANY
	R....82	57.11.3100	10 E	1%, 0207 , MF	ANY
	R....83	57.11.3100	10 E	1%, 0207 , MF	ANY
	R....84	57.11.3103	10 k	1%, 0207 , MF	ANY
	R....85	57.11.3120	12 E	1%, 0207 , MF	ANY
	R....86	57.11.5106	10 M	5%, 0207 , MF	ANY
	R....87	57.11.5225	2.2 M	5%, 0207 , MF	ANY
	R....91	57.11.3911	910 E	1%, 0207 , MF	ANY

D/A CONVERTER 1.862.651.21 PART III

IND.	POS.NO.	PART NO.	VALUE	SPECIFICATIONS / EQUIVALENT	MANUF.
	R...92	57.11.3182	1.8 k	1%, 0207 , MF	ANY
	R...93	57.11.3242	2.4 k	1%, 0207 , MF	ANY
	R...94	57.11.3242	2.4 k	1%, 0207 , MF	ANY
	R...95	57.11.3222	2.2 k	1%, 0207 , MF	ANY
	R...96	57.11.3472	4.7 k	1%, 0207 , MF	ANY
	R...97	57.11.3472	4.7 k	1%, 0207 , MF	ANY
	R...98	57.11.3472	4.7 k	1%, 0207 , MF	ANY
	R...99	57.11.3472	4.7 k	1%, 0207 , MF	ANY
	R...100	57.11.3131	130 E	1%, 0207 , MF	ANY
	R...101	57.11.3121	120 E	1%, 0207 , MF	ANY
	R...102	57.11.3103	10 k	1%, 0207 , MF	ANY
	R...103	57.11.3103	10 k	1%, 0207 , MF	ANY
	R...104	57.11.3103	10 k	1%, 0207 , MF	ANY
	R...105	57.11.3100	10 E	1%, 0207 , MF	ANY
	R...106	57.11.3100	10 E	1%, 0207 , MF	ANY
	R...107	57.11.3103	10 k	1%, 0207 , MF	ANY
	R...108	57.11.3120	12 E	1%, 0207 , MF	ANY
	R...109	57.11.3103	10 k	1%, 0207 , MF	ANY
	R...110	57.11.3103	10 k	1%, 0207 , MF	ANY
	R...111	57.11.3103	10 k	1%, 0207 , MF	ANY
	R...112	57.11.3100	10 E	1%, 0207 , MF	ANY
	R...113	57.11.3100	10 E	1%, 0207 , MF	ANY
	R...114	57.11.3103	10 k	1%, 0207 , MF	ANY
	R...115	57.11.3120	12 E	1%, 0207 , MF	ANY
	R...116	57.11.5106	10 M	5%, 0207 , MF	ANY
	R...117	57.11.5225	2.2 M	5%, 0207 , MF	ANY
	R...121	57.11.3911	910 E	1%, 0207 , MF	ANY
	R...122	57.11.3182	1.8 k	1%, 0207 , MF	ANY
	R...123	57.11.3242	2.4 k	1%, 0207 , MF	ANY
	R...124	57.11.3242	2.4 k	1%, 0207 , MF	ANY
	R...125	57.11.3222	2.2 K	1%, 0207 , MF	ANY
	R...126	57.11.3472	4.7 k	1%, 0207 , MF	ANY
	R...127	57.11.3472	4.7 k	1%, 0207 , MF	ANY
	R...128	57.11.3472	4.7 k	1%, 0207 , MF	ANY
	R...129	57.11.3472	4.7 k	1%, 0207 , MF	ANY
	R...130	57.11.3131	130 E	1%, 0207 , MF	ANY
	R...131	57.11.3121	120 E	1%, 0207 , MF	ANY

IND.	POS.NO.	PART NO.	VALUE	SPECIFICATIONS / EQUIVALENT	MANUF.
	R...132	57.11.3103	10 k	1%, 0207 , MF	ANY
	R...133	57.11.3103	10 k	1%, 0207 , MF	ANY
	R...134	57.11.3103	10 k	1%, 0207 , MF	ANY
	R...135	57.11.3100	10 E	1%, 0207 , MF	ANY
	R...136	57.11.3100	10 E	1%, 0207 , MF	ANY
	R...137	57.11.3103	10 k	1%, 0207 , MF	ANY
	R...138	57.11.3120	12 E	1%, 0207 , MF	ANY
	R...139	57.11.3103	10 k	1%, 0207 , MF	ANY
	R...140	57.11.3103	10 k	1%, 0207 , MF	ANY
	R...141	57.11.3103	10 k	1%, 0207 , MF	ANY
	R...142	57.11.3100	10 E	1%, 0207 , MF	ANY
	R...143	57.11.3100	10 E	1%, 0207 , MF	ANY
	R...144	57.11.3103	10 k	1%, 0207 , MF	ANY
	R...145	57.11.3120	12 E	1%, 0207 , MF	ANY
	R...146	57.11.5106	10 M	5%, 0207 , MF	ANY
	R...147	57.11.5225	2.2 M	5%, 0207 , MF	ANY
	R...151	57.11.3911	910 E	1%, 0207 , MF	ANY
	R...152	57.11.3182	1.8 k	1%, 0207 , MF	ANY
	R...153	57.11.3242	2.4 k	1%, 0207 , MF	ANY
	R...154	57.11.3242	2.4 k	1%, 0207 , MF	ANY
	R...155	57.11.3222	2.2 K	1%, 0207 , MF	ANY
	R...156	57.11.3472	4.7 k	1%, 0207 , MF	ANY
	R...157	57.11.3472	4.7 k	1%, 0207 , MF	ANY
	R...158	57.11.3472	4.7 k	1%, 0207 , MF	ANY
	R...159	57.11.3472	4.7 k	1%, 0207 , MF	ANY
	R...160	57.11.3131	130 E	1%, 0207 , MF	ANY
	R...161	57.11.3121	120 E	1%, 0207 , MF	ANY
	R...162	57.11.3103	10 k	1%, 0207 , MF	ANY
	R...163	57.11.3103	10 k	1%, 0207 , MF	ANY
	R...164	57.11.3103	10 k	1%, 0207 , MF	ANY
	R...165	57.11.3100	10 E	1%, 0207 , MF	ANY
	R...166	57.11.3100	10 E	1%, 0207 , MF	ANY
	R...167	57.11.3103	10 k	1%, 0207 , MF	ANY
	R...168	57.11.3120	12 E	1%, 0207 , MF	ANY
	R...169	57.11.3103	10 k	1%, 0207 , MF	ANY
	R...170	57.11.3103	10 k	1%, 0207 , MF	ANY
	R...171	57.11.3103	10 k	1%, 0207 , MF	ANY

IND.	POS.NO.	PART NO.	VALUE	SPECIFICATIONS / EQUIVALENT	MANUF.
	R...172	57.11.3100	10 E	1%, 0207 , MF	ANY
	R...173	57.11.3100	10 E	1%, 0207 , MF	ANY
	R...174	57.11.3103	10 k	1%, 0207 , MF	ANY
	R...175	57.11.3120	12 E	1%, 0207 , MF	ANY
	R...176	57.11.5106	10 M	5%, 0207 , MF	ANY
	R...177	57.11.5225	2.2 M	5%, 0207 , MF	ANY
	R...181	57.11.3911	910 E	1%, 0207 , MF	ANY
	R...182	57.11.3182	1.8 k	1%, 0207 , MF	ANY
	R...183	57.11.3242	2.4 k	1%, 0207 , MF	ANY
	R...184	57.11.3242	2.4 k	1%, 0207 , MF	ANY
	R...185	57.11.3222	2.2 K	1%, 0207 , MF	ANY
	R...186	57.11.3472	4.7 k	1%, 0207 , MF	ANY
	R...187	57.11.3472	4.7 k	1%, 0207 , MF	ANY
	R...188	57.11.3472	4.7 k	1%, 0207 , MF	ANY
	R...189	57.11.3472	4.7 k	1%, 0207 , MF	ANY
	R...190	57.11.3131	130 E	1%, 0207 , MF	ANY
	R...191	57.11.3121	120 E	1%, 0207 , MF	ANY
	R...192	57.11.3103	10 k	1%, 0207 , MF	ANY
	R...193	57.11.3103	10 k	1%, 0207 , MF	ANY
	R...194	57.11.3103	10 k	1%, 0207 , MF	ANY
	R...195	57.11.3100	10 E	1%, 0207 , MF	ANY
	R...196	57.11.3100	10 E	1%, 0207 , MF	ANY
	R...197	57.11.3103	10 k	1%, 0207 , MF	ANY
	R...198	57.11.3120	12 E	1%, 0207 , MF	ANY
	R...199	57.11.3103	10 k	1%, 0207 , MF	ANY
	R...200	57.11.3103	10 k	1%, 0207 , MF	ANY
	R...201	57.11.3103	10 k	1%, 0207 , MF	ANY
	R...202	57.11.3100	10 E	1%, 0207 , MF	ANY
	R...203	57.11.3100	10 E	1%, 0207 , MF	ANY
	R...204	57.11.3103	10 k	1%, 0207 , MF	ANY
	R...205	57.11.3120	12 E	1%, 0207 , MF	ANY
	R...206	57.11.5106	10 M	5%, 0207 , MF	ANY
	R...207	57.11.5225	2.2 M	5%, 0207 , MF	ANY
	R...208	57.11.3222	2.2 k	1%, 0207 , MF	ANY
	R...211	57.11.3911	910 E	1%, 0207 , MF	ANY
	R...212	57.11.3182	1.8 k	1%, 0207 , MF	ANY
	R...213	57.11.3242	2.4 k	1%, 0207 , MF	ANY

IND.	POS.NO.	PART NO.	VALUE	SPECIFICATIONS / EQUIVALENT	MANUF.
	R...214	57.11.3242	2.4 k	1%, 0207 , MF	ANY
	R...215	57.11.3222	2.2 K	1%, 0207 , MF	ANY
	R...216	57.11.3472	4.7 k	1%, 0207 , MF	ANY
	R...217	57.11.3472	4.7 k	1%, 0207 , MF	ANY
	R...218	57.11.3472	4.7 k	1%, 0207 , MF	ANY
	R...219	57.11.3472	4.7 k	1%, 0207 , MF	ANY
	R...220	57.11.3131	130 E	1%, 0207 , MF	ANY
	R...221	57.11.3121	120 E	1%, 0207 , MF	ANY
	R...222	57.11.3103	10 k	1%, 0207 , MF	ANY
	R...223	57.11.3103	10 k	1%, 0207 , MF	ANY
	R...224	57.11.3103	10 k	1%, 0207 , MF	ANY
	R...225	57.11.3100	10 E	1%, 0207 , MF	ANY
	R...226	57.11.3100	10 E	1%, 0207 , MF	ANY
	R...227	57.11.3103	10 k	1%, 0207 , MF	ANY
	R...228	57.11.3120	12 E	1%, 0207 , MF	ANY
	R...229	57.11.3103	10 k	1%, 0207 , MF	ANY
	R...230	57.11.3103	10 k	1%, 0207 , MF	ANY
	R...231	57.11.3103	10 k	1%, 0207 , MF	ANY
	R...232	57.11.3100	10 E	1%, 0207 , MF	ANY
	R...233	57.11.3100	10 E	1%, 0207 , MF	ANY
	R...234	57.11.3103	10 k	1%, 0207 , MF	ANY
	R...235	57.11.3120	12 E	1%, 0207 , MF	ANY
	R...236	57.11.5106	10 M	5%, 0207 , MF	ANY
	R...237	57.11.5225	2.2 M	5%, 0207 , MF	ANY
	R...241	57.11.3241	240 E	1%, 0207 , MF	ANY
	R...242	57.11.3272	2.7 k	1%, 0207 , MF	ANY
	R...243	57.11.3241	240 E	1%, 0207 , MF	ANY
	R...244	57.11.3272	2.7 k	1%, 0207 , MF	ANY
	R...245	57.11.3271	270 E	1%, 0207 , MF	ANY
	R...246	57.11.3821	820 E	1%, 0207 , MF	ANY
	R...247	57.11.3822	8.2 k	1%, 0207 , MF	ANY
	R...248	57.56.5470	47 E	10%, 4 W	ANY
	R...249	57.11.3104	100 k	1%, 0207 , MF	ANY
	R...250	57.11.3222	2.2 k	1%, 0207 , MF	ANY
	R...251	57.11.3392	3.9 k	1%, 0207 , MF	ANY
	R...252	57.11.3104	100 k	1%, 0207 , MF	ANY
	R...258	57.11.3471	470 E	1%, 0207 , MF	ANY

IND.	POS.NO.	PART NO.	VALUE	SPECIFICATIONS / EQUIVALENT	MANUF.
	RA....1	58.01.8103	10 k	10%, .5 W	ANY
	RA...31	58.01.8103	10 k	10%, .5 W	ANY
	RA...61	58.01.8103	10 k	10%, .5 W	ANY
	RA...91	58.01.8103	10 k	10%, .5 W	ANY
	RA..121	58.01.8103	10 k	10%, .5 W	ANY
	RA..151	58.01.8103	10 k	10%, .5 W	ANY
	RA..181	58.01.8103	10 k	10%, .5 W	ANY
	RA..211	58.01.8103	10 k	10%, .5 W	ANY
	TP....1	54.02.0320		TESTPOINT	ANY
	TP....2	54.02.0320		TESTPOINT	ANY
	TP....3	54.02.0320		TESTPOINT	ANY
	TP....4	54.02.0320		TESTPOINT	ANY
	TP....5	54.02.0320		TESTPOINT	ANY
	TP....6	54.02.0320		TESTPOINT	ANY
	TP....7	54.02.0320		TESTPOINT	ANY
	TP....8	54.02.0320		TESTPOINT	ANY
	TP....9	54.02.0320		TESTPOINT	ANY
	TP...10	54.02.0320		TESTPOINT	ANY
	TP...11	54.02.0320		TESTPOINT	ANY
	TP...12	54.02.0320		TESTPOINT	ANY
	TP...13	54.02.0320		TESTPOINT	ANY
	TP...14	54.02.0320		TESTPOINT	ANY
	TP...15	54.02.0320		TESTPOINT	ANY
	TP...16	54.02.0320		TESTPOINT	ANY
	TP...17	54.02.0320		TESTPOINT	ANY
	TP...18	54.02.0320		TESTPOINT	ANY
	TP...19	54.02.0320		TESTPOINT	ANY
	TP...20	54.02.0320		TESTPOINT	ANY
	TP...21	54.02.0320		TESTPOINT	ANY
	TP...22	54.02.0320		TESTPOINT	ANY
	TP...23	54.02.0320		TESTPOINT	ANY
	TP...24	54.02.0320		TESTPOINT	ANY
	TP...25	54.02.0320		TESTPOINT	ANY
	TP...26	54.02.0320		TESTPOINT	ANY
	TP...27	54.02.0320		TESTPOINT	ANY
	TP...28	54.02.0320		TESTPOINT	ANY

IND.	POS.NO.	PART NO.	VALUE	SPECIFICATIONS / EQUIVALENT	MANUF.
	TP...29	54.02.0320		TESTPOINT	ANY
	TP...30	54.02.0320		TESTPOINT	ANY
	TP...31	54.02.0320		TESTPOINT	ANY
	TP...32	54.02.0320		TESTPOINT	ANY
	TP...33	54.02.0320		TESTPOINT	ANY
	TP...34	54.02.0320		TESTPOINT	ANY
	TP...35	54.02.0320		TESTPOINT	ANY
	TP...36	54.02.0320		TESTPOINT	ANY
	TP...37	54.02.0320		TESTPOINT	ANY
	TP...38	54.02.0320		TESTPOINT	ANY
	TP...39	54.02.0320		TESTPOINT	ANY
	TP...40	54.02.0320		TESTPOINT	ANY
	TP...41	54.02.0320		TESTPOINT	ANY
	TP...42	54.02.0320		TESTPOINT	ANY
	TP...43	54.02.0320		TESTPOINT	ANY
	TP...44	54.02.0320		TESTPOINT	ANY
	TP...46	54.02.0320		TESTPOINT	ANY
	TP...47	54.02.0320		TESTPOINT	ANY
	TP...48	54.02.0320		TESTPOINT	ANY
	TP...49	54.02.0320		TESTPOINT	ANY
	TP...50	54.02.0320		TESTPOINT	ANY
	XF....1	53.03.0118		CLAMP	ANY
	XF....2	53.03.0118		CLAMP	ANY
	XIC...3	53.03.0169		DIL 24-PIN	ANY
	XIC...4	53.03.0173		DIL 28-PIN	ANY
	XIC...6	53.03.0165		DIL 20-PIN	ANY
	XIC..10	53.03.0168		DIL 16-PIN	ANY
	XIC..11	53.03.0165		DIL 20-PIN	ANY
	XIC..12	53.03.0165		DIL 20-PIN	ANY
	XIC..14	53.03.0166		DIL 8-PIN	ANY
	XIC..15	53.03.0165		DIL 20-PIN	ANY
	XIC..16	53.03.0166		DIL 8-PIN	ANY
	XIC..22	53.03.0165		DIL 20-PIN	ANY
	XIC..23	53.03.0165		DIL 20-PIN	ANY
	XIC..24	53.03.0166		DIL 8-PIN	ANY

IND.	POS.NO.	PART NO.	VALUE	SPECIFICATIONS / EQUIVALENT	MANUF.
	XIC..25	53.03.0165		DIL 20-PIN	ANY
	XIC..63	53.03.0169		DIL 24-PIN	ANY
	XIC..64	53.03.0173		DIL 28-PIN	ANY
	XIC..66	53.03.0165		DIL 20-PIN	ANY
	XIC..70	53.03.0168		DIL 16-PIN	ANY
	XIC.123	53.03.0169		DIL 24-PIN	ANY
	XIC.124	53.03.0173		DIL 28-PIN	ANY
	XIC.126	53.03.0165		DIL 20-PIN	ANY
	XIC.130	53.03.0168		DIL 16-PIN	ANY
	XIC.183	53.03.0169		DIL 24-PIN	ANY
	XIC.184	53.03.0173		DIL 28-PIN	ANY
	XIC.186	53.03.0165		DIL 20-PIN	ANY
	XIC.190	53.03.0168		DIL 16-PIN	ANY

REMARKS:
Aenderungen:

00: IC 22 AENDERT AUF 1.862.905.21

MANUFACTURERS:
St = STUDER, Ph = PHILIPS, An = ANALOGIK, Ha = HARRIS, Bd = BURR BROWN
Ad = ANALOG DEVICES

ABBREVIATIONS:
CER = CERAMIC / FILM = FILM TYPE / XF = CLAMP FOR FUSES /
XIC = IC SOCKET

ORIG 90/11/01

BLOCK DIAGRAM MCH DATA PROCESSOR

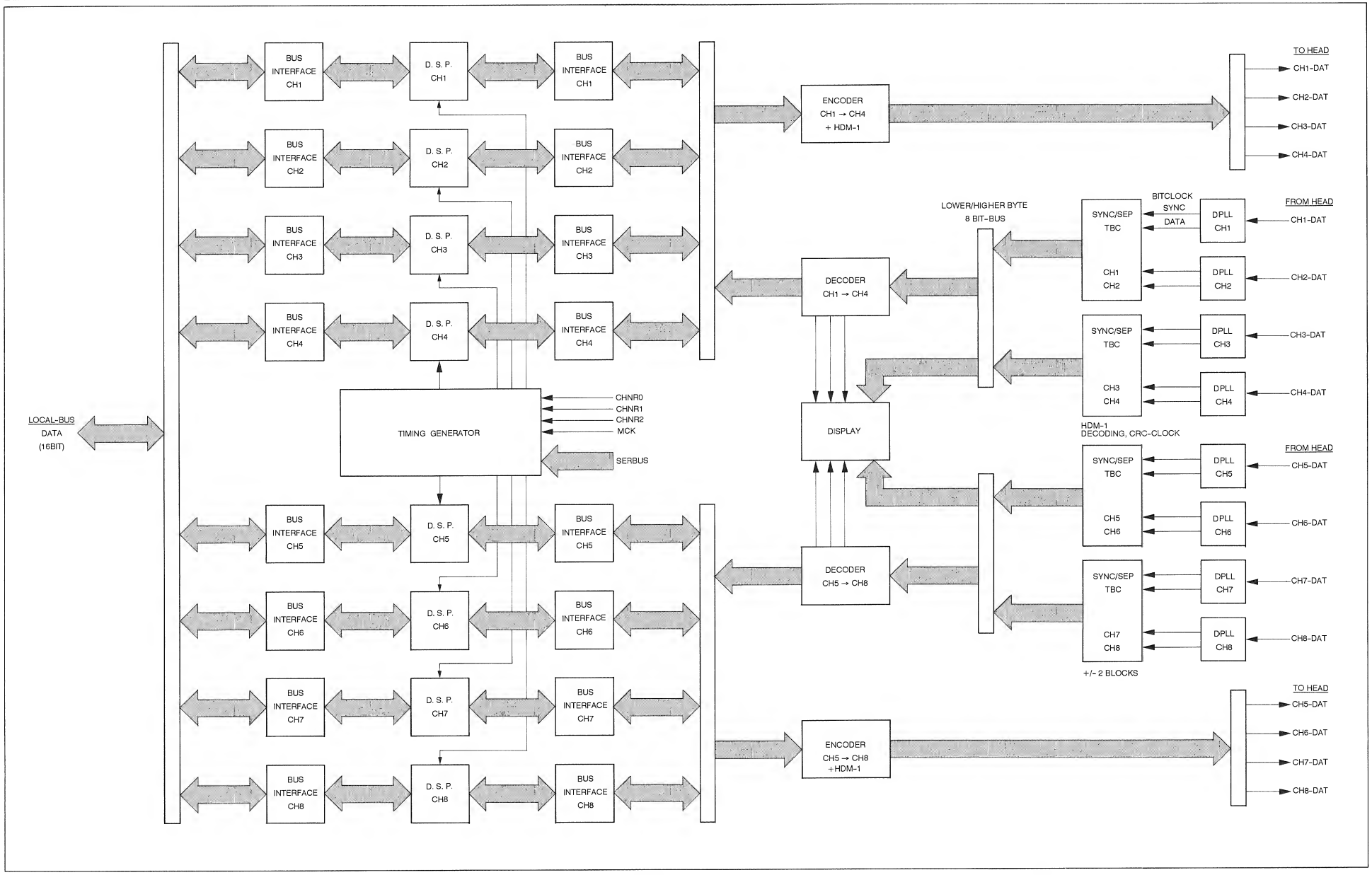

BLOCK DIAGRAM MCH DATA PROCESSOR

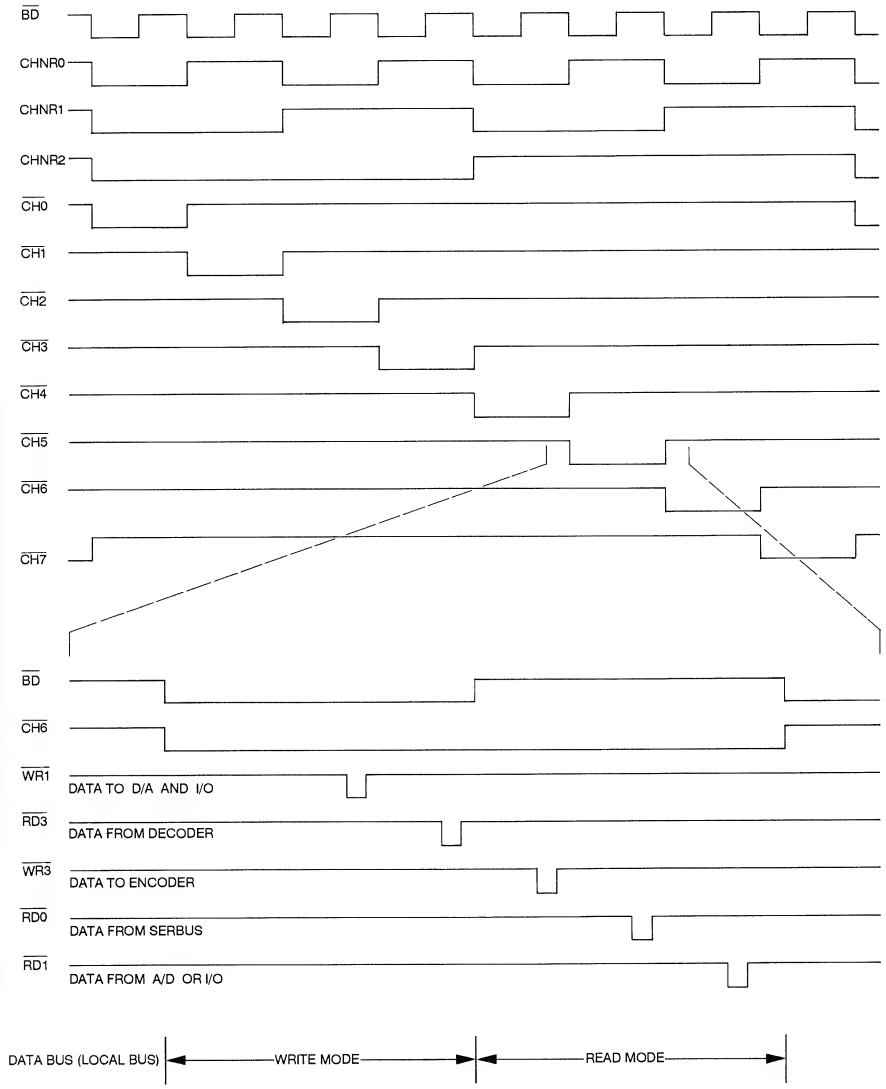

MCH DATA PROCESSOR 1.862.652.21

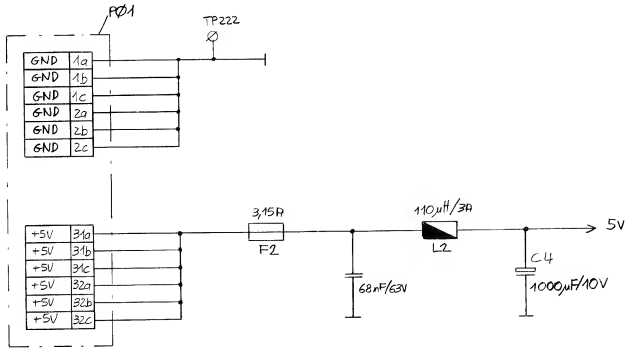

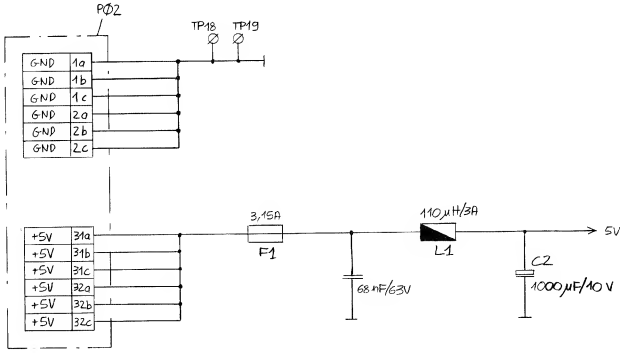

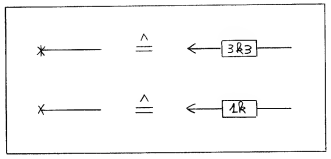

0 14.12.88			
	D820 MCH - MAPRO		PAGE 1 OF 21
STUDER	SPEISUNG	SC	1.862.652.21

MCH DATA PROCESSOR 1.862.652.21

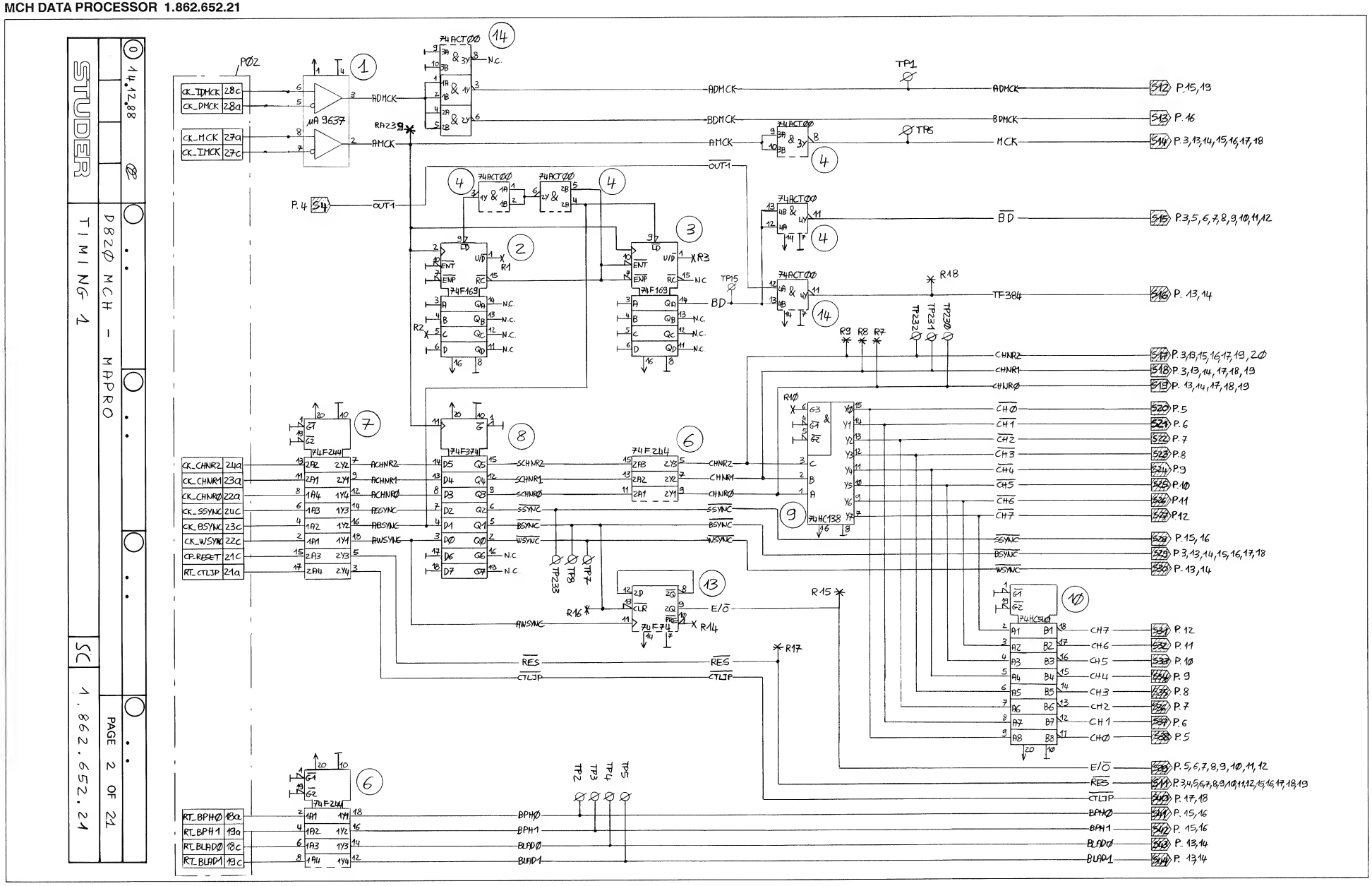

MCH DATA PROCESSOR 1.862.652.21

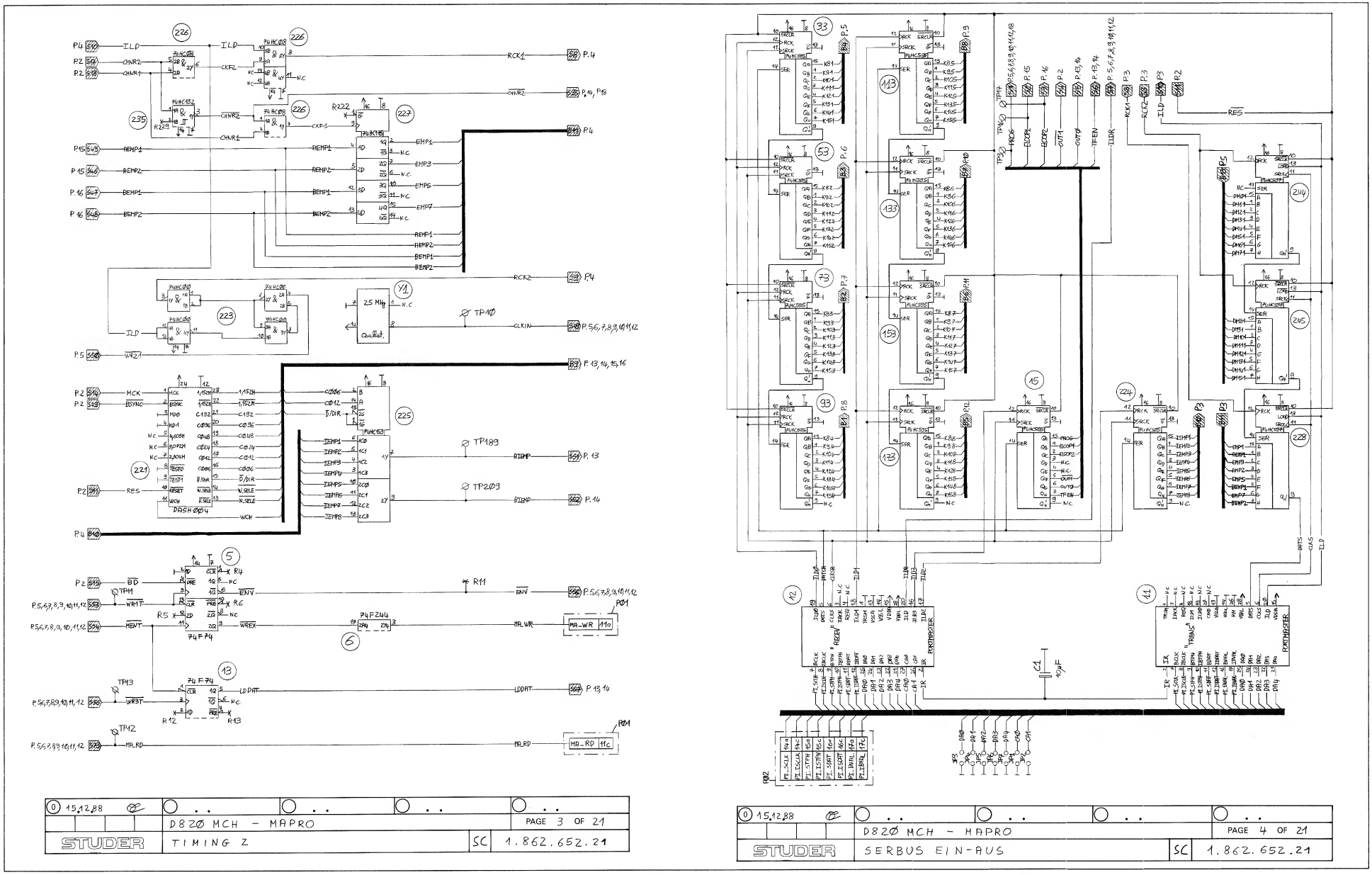

MCH DATA PROCESSOR 1.862.652.21

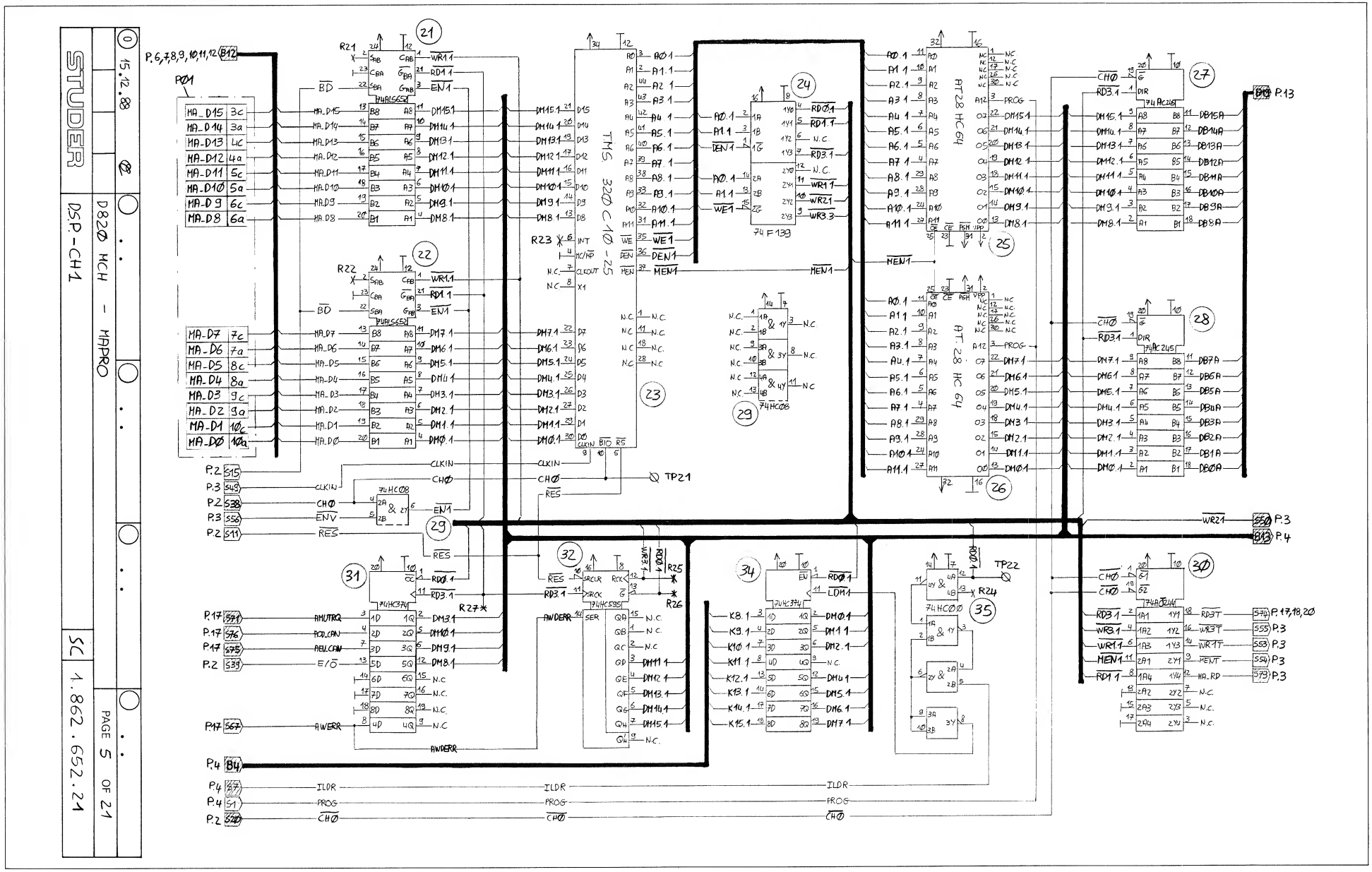

MCH DATA PROCESSOR 1.862.652.21

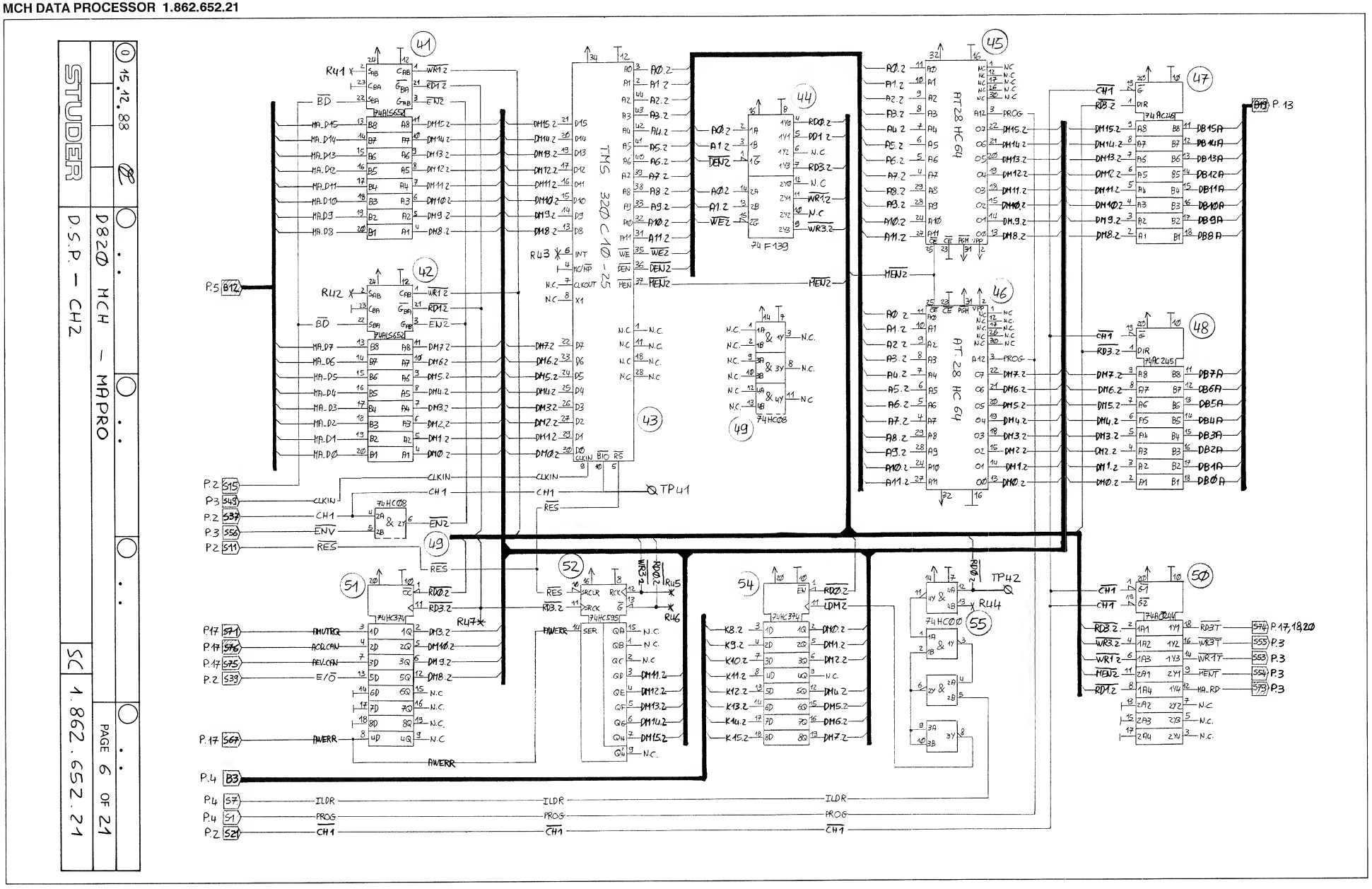

MCH DATA PROCESSOR 1.862.652.21

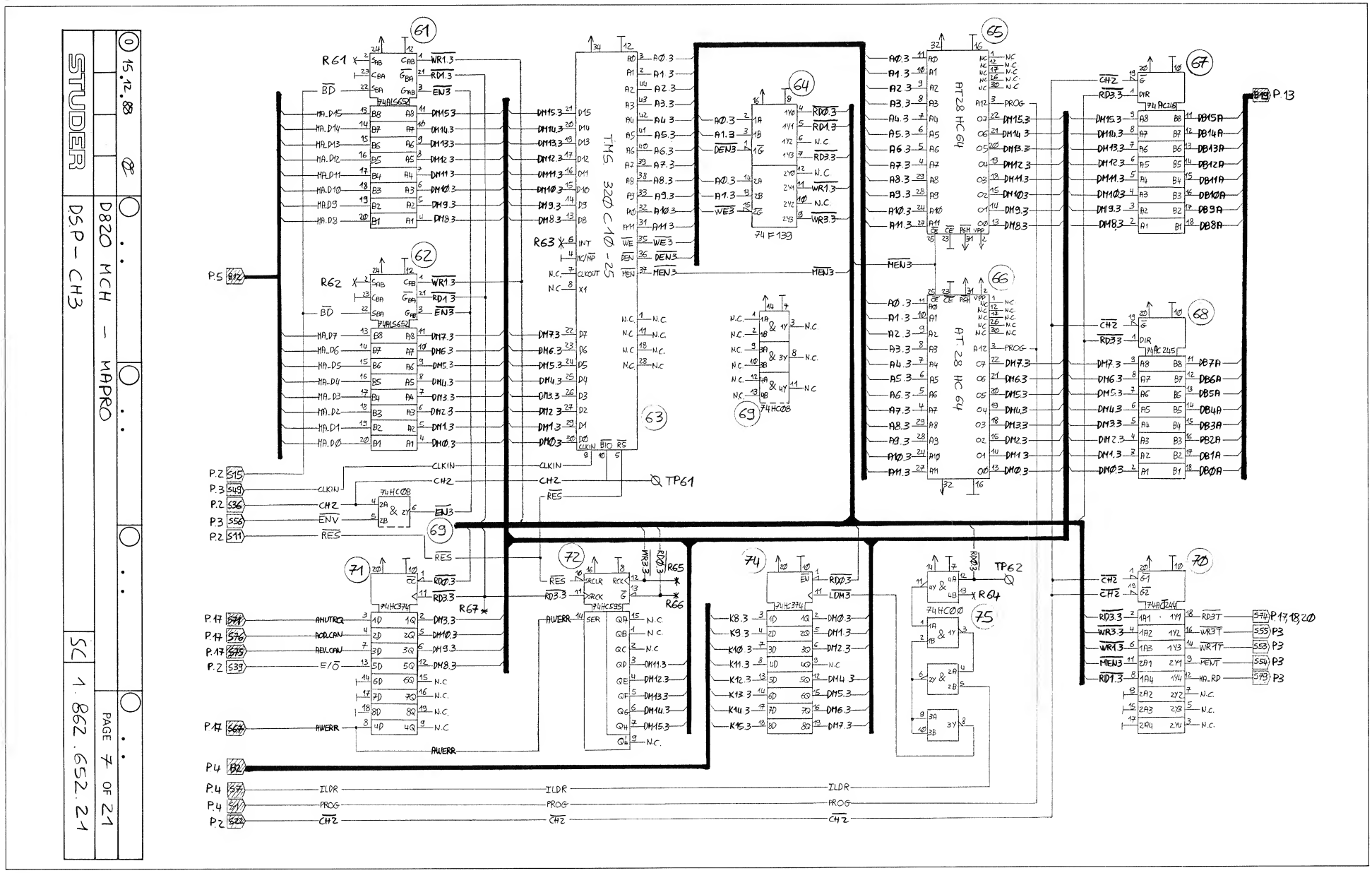

MCH DATA PROCESSOR 1.862.652.21

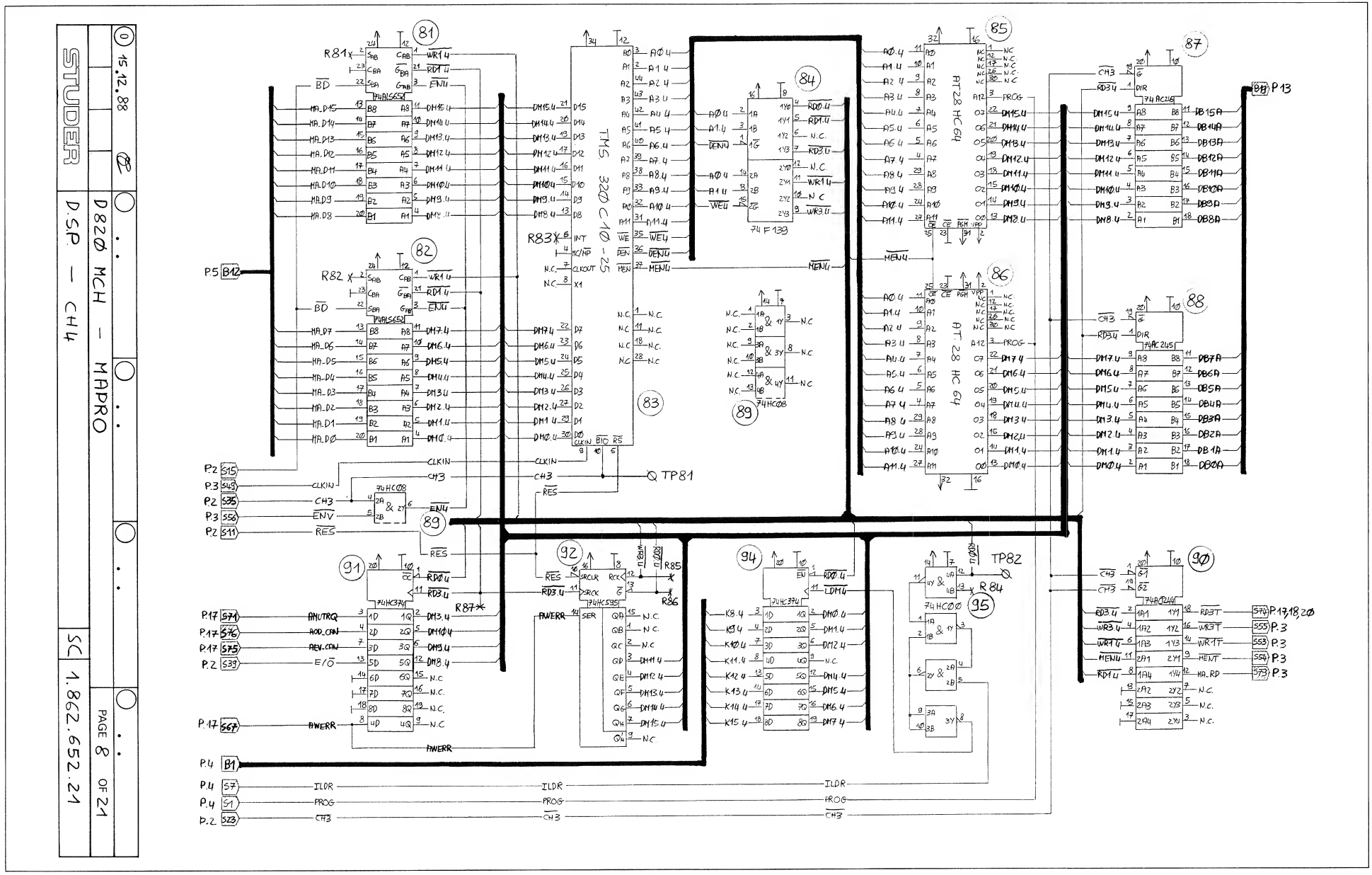

MCH DATA PROCESSOR 1.862.652.21

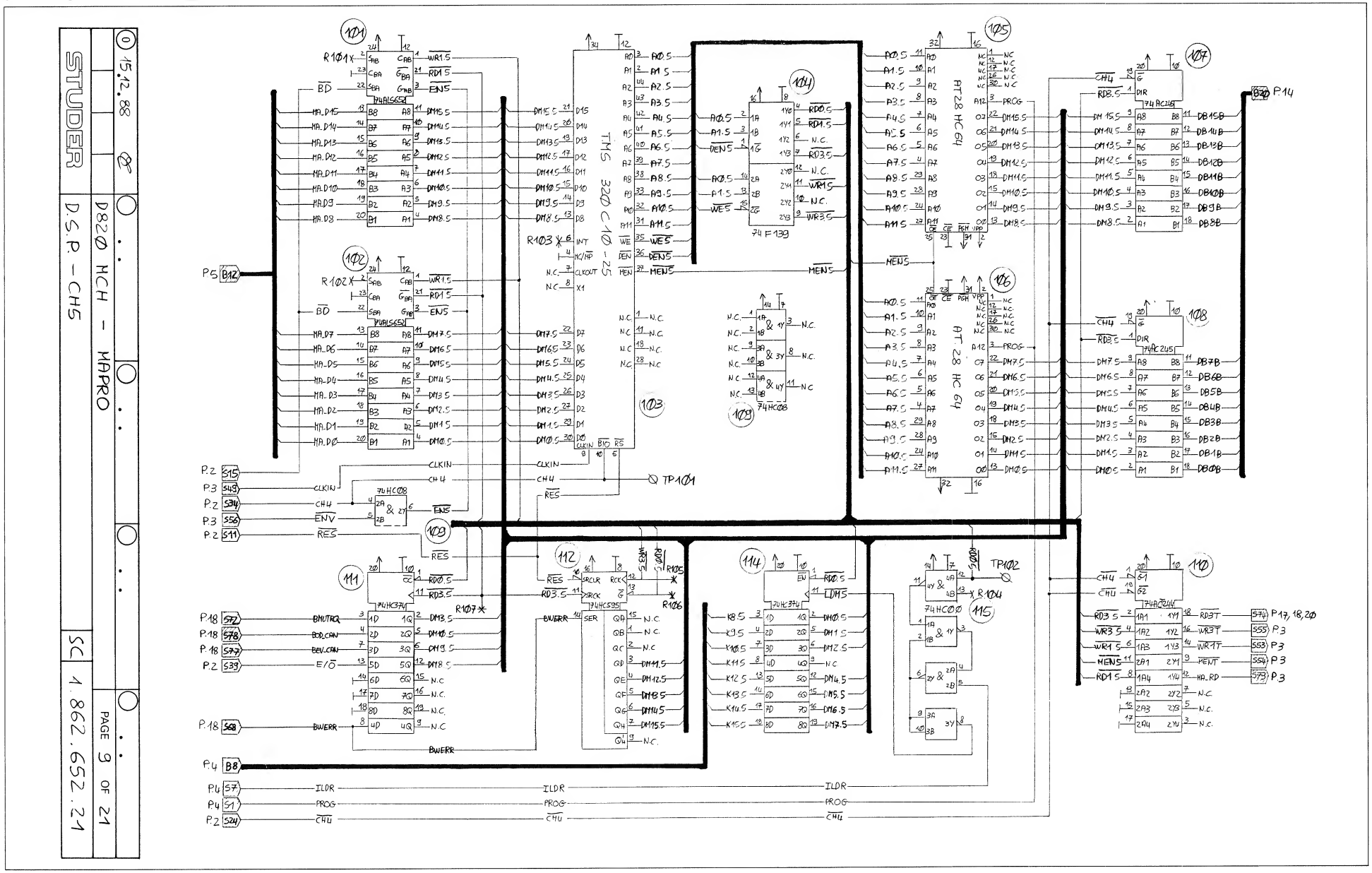

MCH DATA PROCESSOR 1.862.652.21

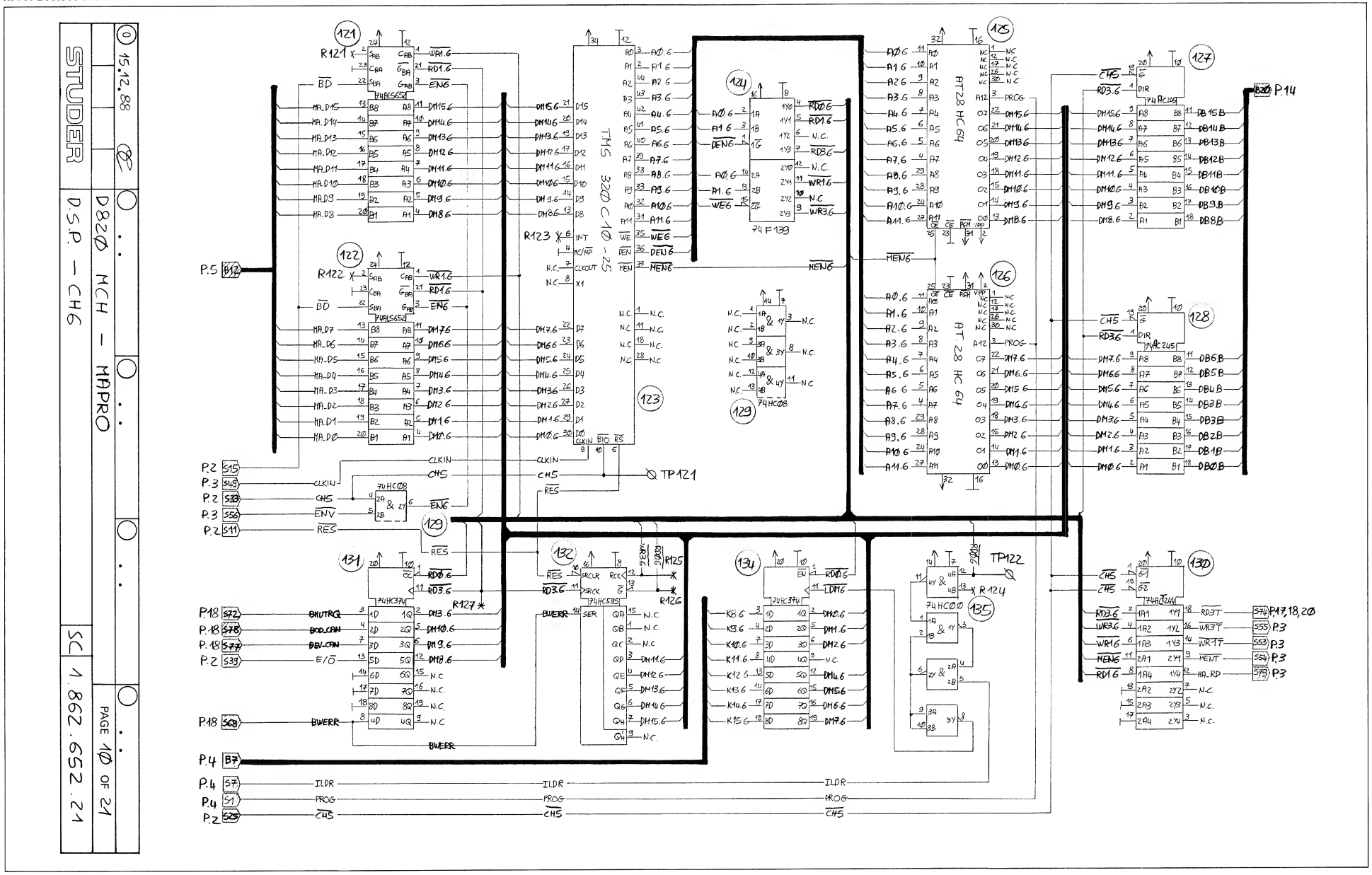

MCH DATA PROCESSOR 1.862.652.21

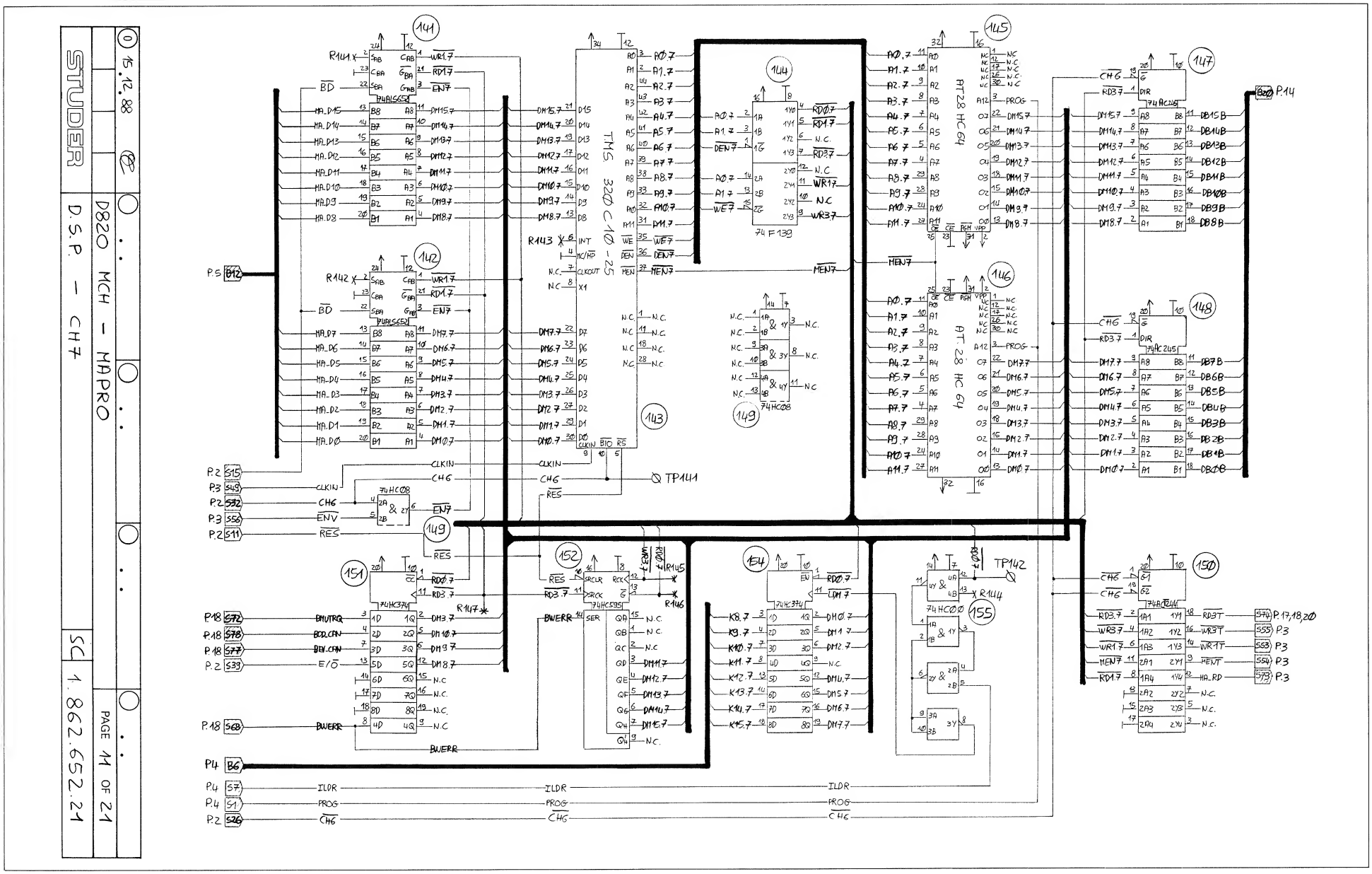

MCH DATA PROCESSOR 1.862.652.21

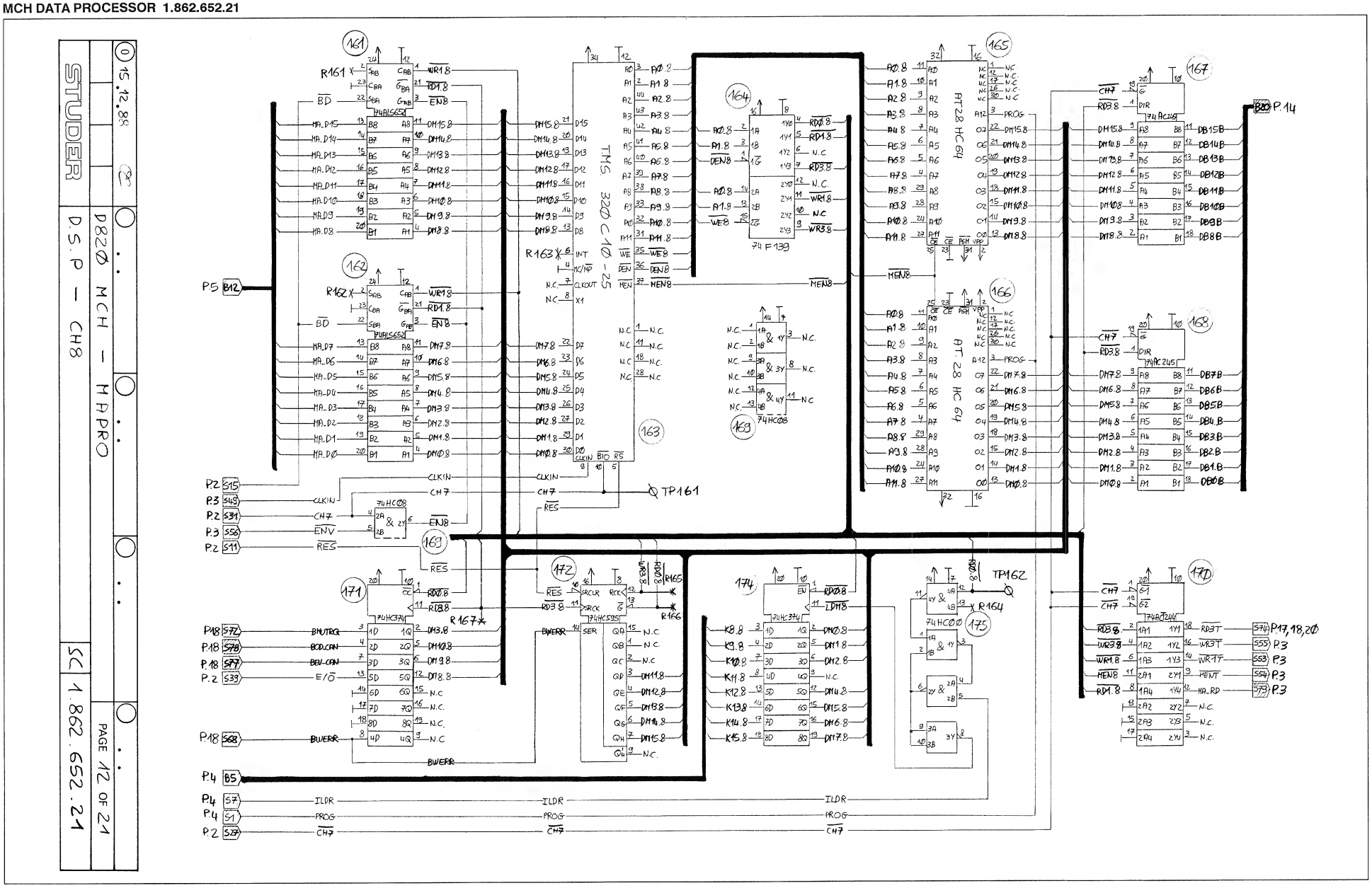

MCH DATA PROCESSOR 1.862.652.21

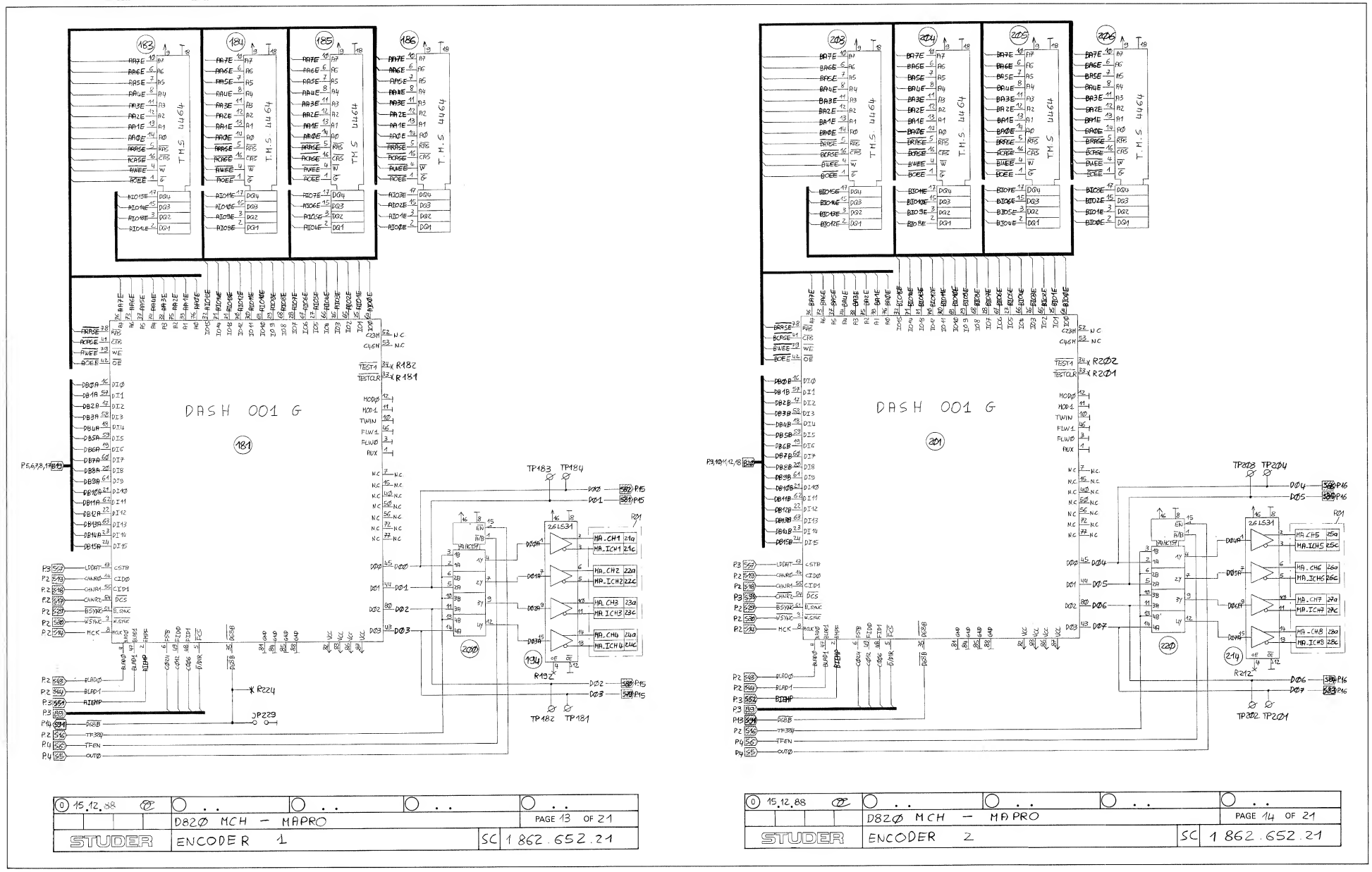

MCH DATA PROCESSOR 1.862.652.21

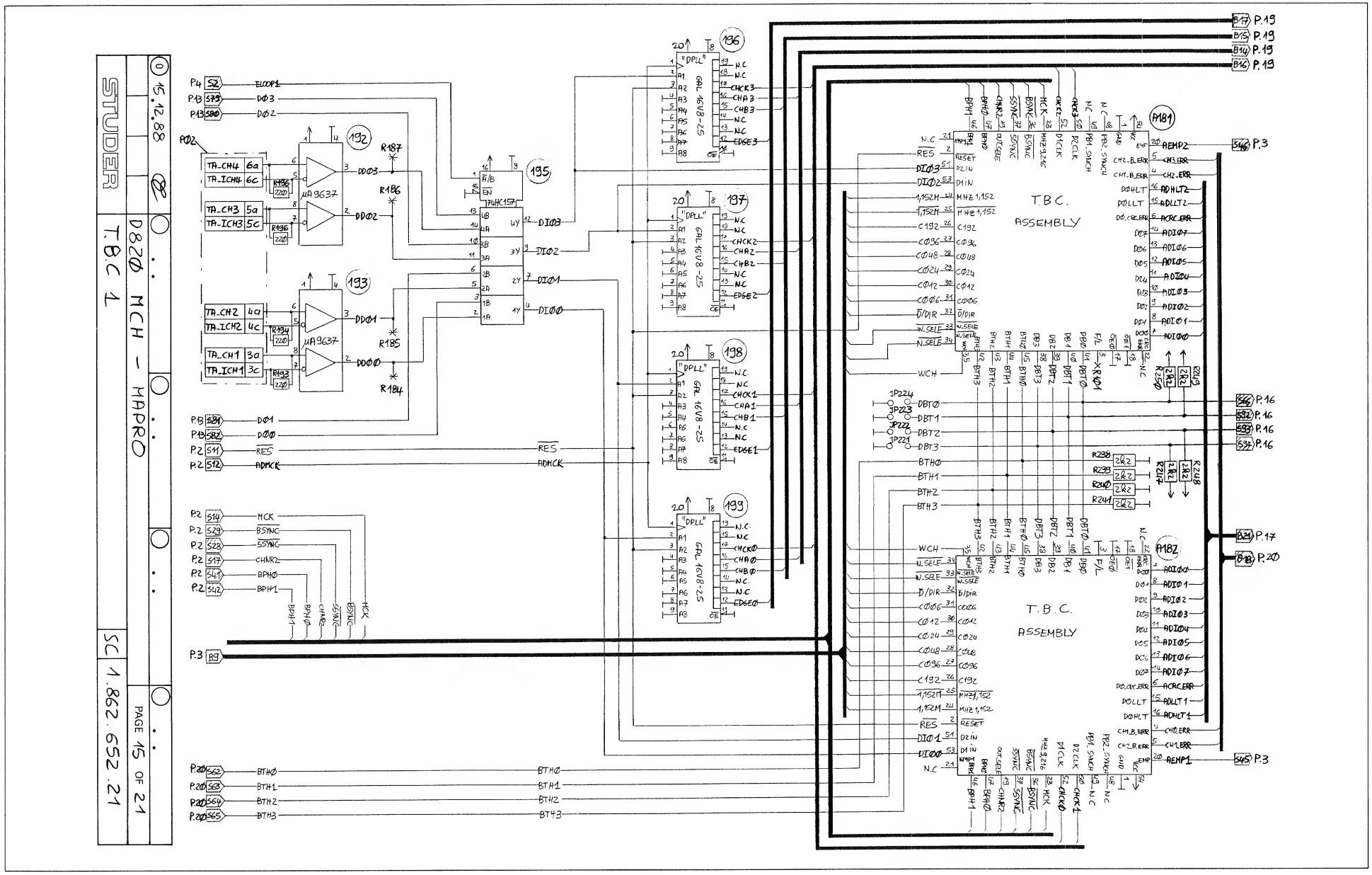

MCH DATA PROCESSOR 1.862.652.21

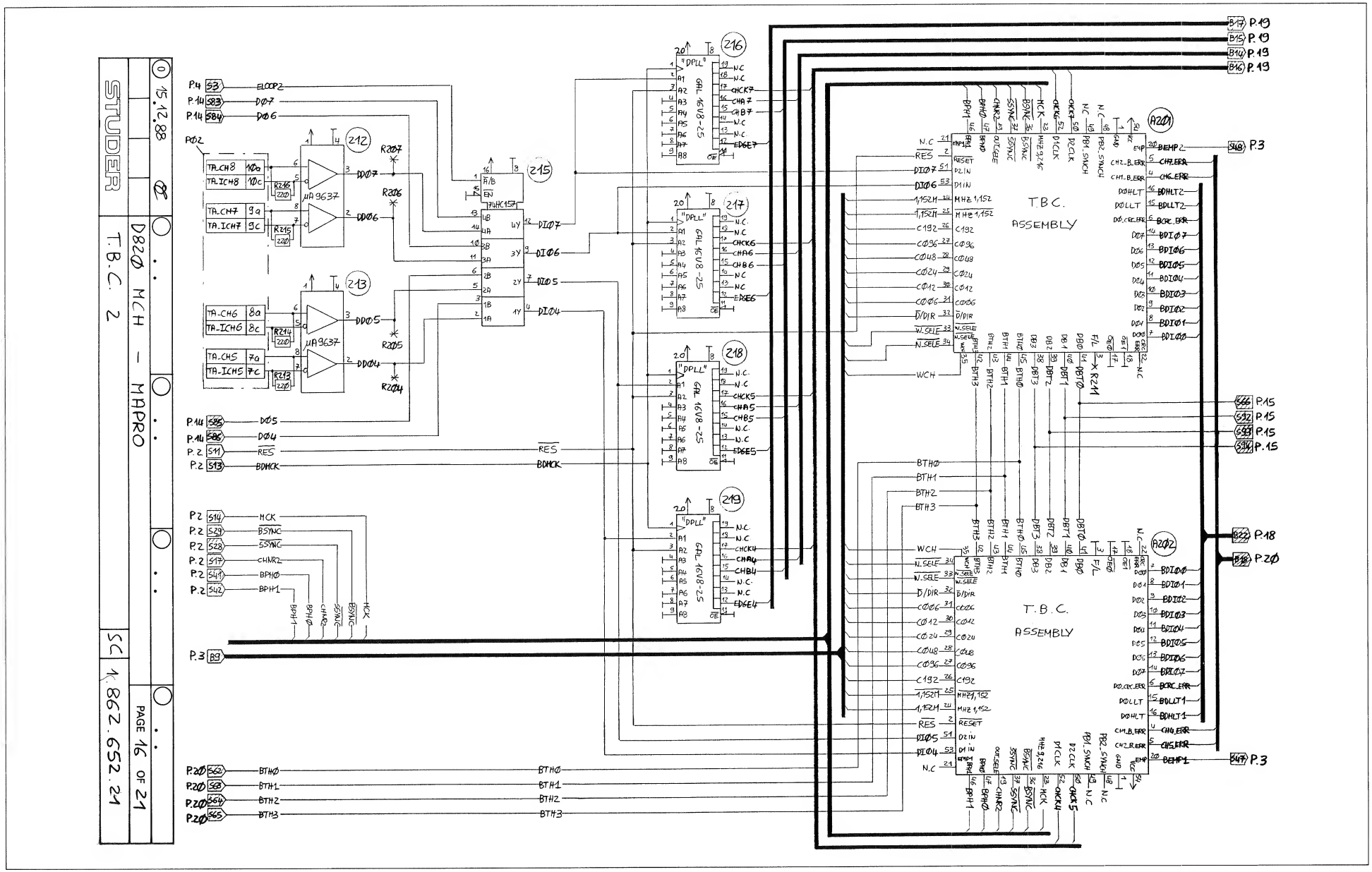

MCH DATA PROCESSOR 1.862.652.21

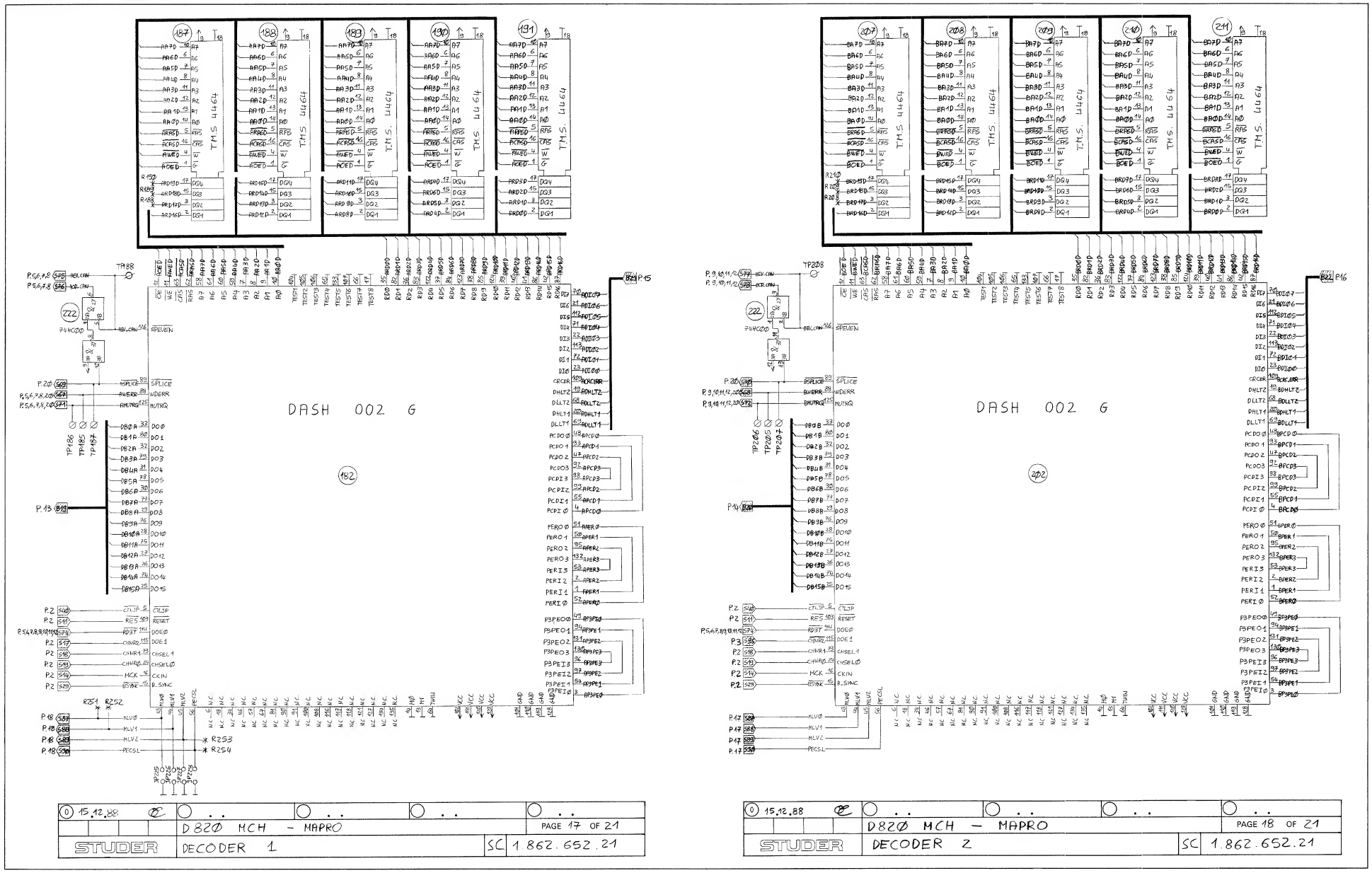

MCH DATA PROCESSOR 1.862.652.21

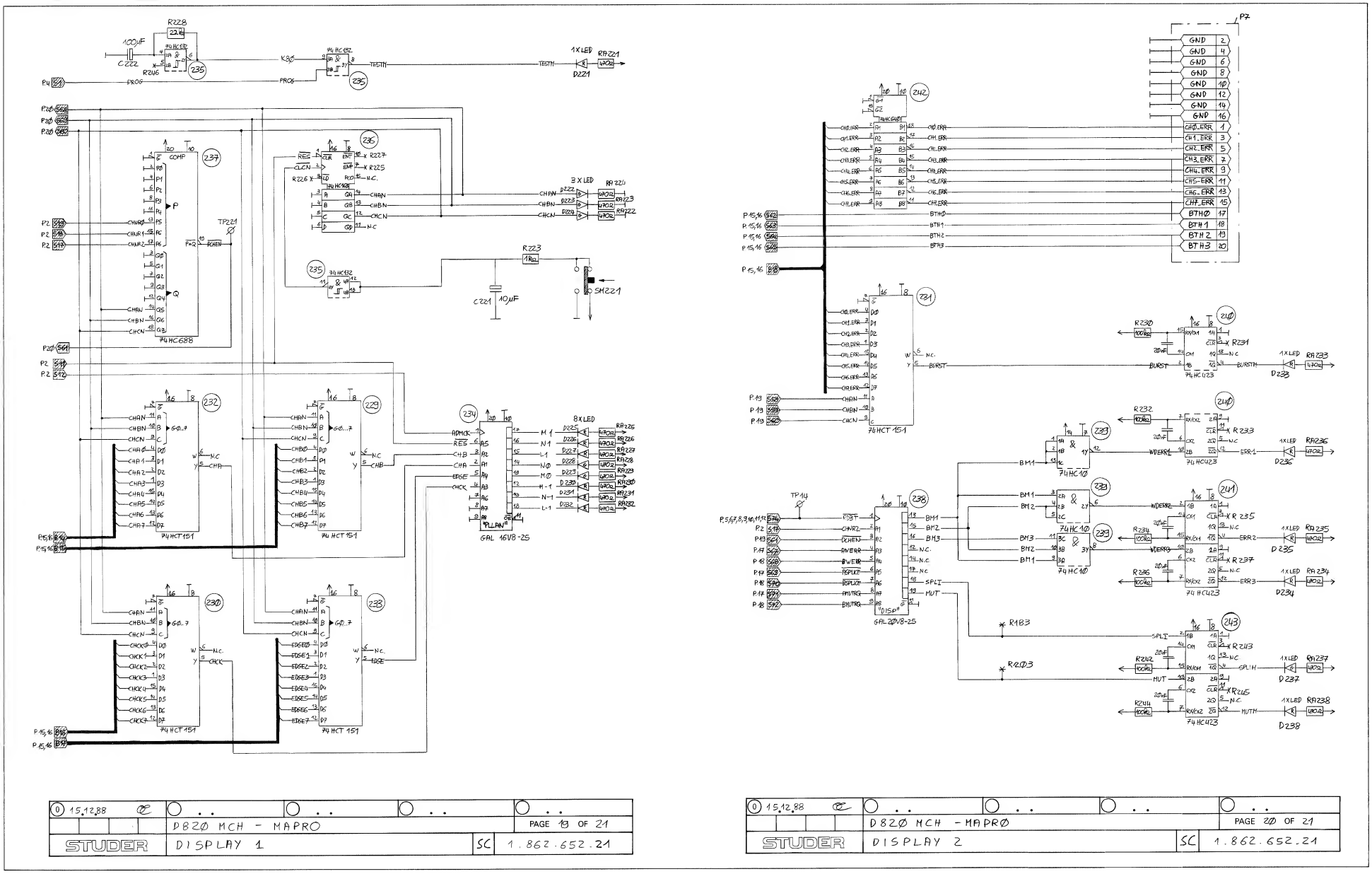

MCH DATA PROCESSOR 1.862.652.21

SIGNAL

S1 "PROG" PAGE: 4,5,6,7,8,9,10,11,12,18
S2 "ELOOP1" PAGE: 4,15
S3 "ELOOP2" PAGE: 4,16
S4 "$\overline{OUT1}$" PAGE: 4,2
S5 "OUT0" PAGE: 4,13,14
S6 "TFEN" PAGE: 4,13,14
S7 "ILDR" PAGE: 4,5,6,7,8,9,10,11,12
S8 "RCK1" PAGE: 4,3
S9 "RCK2" PAGE: 4,3
S10 "ILD" PAGE: 4,3
S11 "$\overline{REG}$" PAGE: 4,2,3,5,6,7,8,9,10,11,12,15,16,17,18,19
S12 "ADMCK" PAGE: 2,15,19
S13 "BDMCK" PAGE: 2,16
S14 "MCK" PAGE: 2,3,13,14,15,16,17,18
S15 "$\overline{BD}$" PAGE: 2,3,5,6,7,8,9,10,11,12
S16 "TF384" PAGE: 2,13,14
S17 "CHNR2" PAGE: 2,3,13,15,16,17,19,20
S18 "CHNR1" PAGE: 2,3,13,14,17,18,19
S19 "CHNR0" PAGE: 2,13,14,17,18,19
S20 "$\overline{CH0}$" PAGE: 2,5
S21 "$\overline{CH1}$" PAGE: 2,6
S22 "$\overline{CH2}$" PAGE: 2,7
S23 "$\overline{CH3}$" PAGE: 2,8
S24 "$\overline{CH4}$" PAGE: 2,9
S25 "$\overline{CH5}$" PAGE: 2,10
S26 "$\overline{CH6}$" PAGE: 2,11
S27 "$\overline{CH7}$" PAGE: 2,12
S28 "$\overline{SSYNC}$" PAGE: 2,15,16
S29 "$\overline{BSYNC}$" PAGE: 2,3,13,14,15,16,17,18
S30 "$\overline{WSYNC}$" PAGE: 2,13,14
S31 "CH7" PAGE: 2,12
S32 "CH6" PAGE: 2,11
S33 "CH5" PAGE: 2,9
S34 "CH4" PAGE: 2,9
S35 "CH3" PAGE: 2,8
S36 "CH2" PAGE: 2,7
S37 "CH1" PAGE: 2,6
S38 "CH0" PAGE: 2,5
S39 "E/$\overline{O}$" PAGE: 2,5,6,7,8,9,10,11,12
S40 "$\overline{CTLJP}$" PAGE: 2,17,18
S41 "BPH0" PAGE: 2,15,16
S42 "BPH1" PAGE: 2,15,16
S43 "BLAD0" PAGE: 2,13,14
S44 "BLAD1" PAGE: 2,13,14
S45 "AEMP1" PAGE: 3,15
S46 "AEMP2" PAGE: 3,15
S35 "$\overline{CHNR2}$" PAGE: 3,14,18
S47 "BEMP1 PAGE: 3,16
S48 "BEMP2" PAGE: 3,16
S49 "CLKIN" PAGE: 3,5,6,7,8,9,10,11,12
S50 "WR21" PAGE: 3,5
S51 "AIEMP" PAGE: 3,13
S52 "BIEMP" PAGE: 3,14
S53 "$\overline{WR1T}$" PAGE: 3,5,6,7,8,9,10,11,12
S54 "$\overline{MENT}$" PAGE: 3,5,6,7,8,9,10,11,12
S55 "$\overline{WR3T}$" PAGE: 3,5,6,7,8,9,10,11,12
S56 "$\overline{ENV}$" PAGE: 3,5,6,7,8,9,10,11,12
S57 "LDDAT" PAGE: 3,13,14
S58 "CHAN" PAGE: 19,20
S59 "CHBN" PAGE: 19,20
S60 "CHCN" PAGE: 19,20
S61 "$\overline{DCHEN}$" PAGE: 19,20
S62 "BTH0" PAGE: 15,16,20
S63 "BTH1" PAGE: 15,16,20
S64 "BTH2" PAGE: 15,16,20
S65 "BTH3" PAGE: 15,16,20
S66 "DBT0" PAGE: 15,16
S67 "AWERR" PAGE: 5,6,7,8,17,20
S68 "BWERR" PAGE: 9,10,11,12,18,20
S69 "$\overline{ASPLICE}$" PAGE: 17,20
S70 "BSPLICE" PAGE: 18,20
S71 "AMUTRQ" PAGE: 5,6,7,8,17,20
S72 "BMUTRQ" PAGE: 9,10,11,12,18,20
S73 "MA_RD" PAGE: 3,5,6,7,8,9,10,11,12
S74 "$\overline{RD3T}$" PAGE: 5,6,7,8,9,10,11,12,17,18,20
S75 "AEV_CAN" PAGE: 5,6,7,8,17
S76 "AOD_CAN" PAGE: 5,6,7,8,17
S77 "BEV_CAN" PAGE: 9,10,11,12,18
S78 "BOD_CAN" PAGE: 9,10,11,12,18
S79 "D03" PAGE: 13,15
S80 "D02" PAGE: 13,15
S81 "D01" PAGE: 13,15
S82 "D00" PAGE: 13,15
S83 "D07" PAGE: 14,16
S84 "D06" PAGE: 14,16
S85 "D05" PAGE: 14,16
S86 "D04" PAGE: 14,16
S87 "MLV0" PAGE: 17,18
S88 "MLV1" PAGE: 17,18
S89 "MLV2" PAGE: 17,18
S90 "PECSL" PAGE: 17,18
S91 "$\overline{D68B}$" PAGE: 13,14
S92 "DBT1" PAGE: 15,16
S93 "DBT2" PAGE: 15,16
S94 "DBT3" PAGE: 15,16

BUS

B1 PAGE: 4,8
B2 PAGE: 4,7
B3 PAGE: 4,6
B4 PAGE: 4,5
B5 PAGE: 4,12
B6 PAGE: 4,11
B7 PAGE: 4,10
B8 PAGE: 4,9
B9 PAGE: 3,13,14,15,16
B10 PAGE: 3,4
B11 PAGE: 3,4
B12 PAGE: 5,6,7,8,9,10,11,12
B13 PAGE: 4,5
B14 PAGE: 15,16,19
B15 PAGE: 15,16,19
B16 PAGE: 15,16,19
B17 PAGE: 15,16,19
B18 PAGE: 15,16,20
B19 PAGE: 5,6,7,8,13,17
B20 PAGE: 9,10,11,12,14,18
B21 PAGE: 15,17
B22 PAGE: 16,18

0 15.12.88	. .	. .	. .	. .
	D820 MCH - MAPRO		PAGE 21 OF 21
STUDER	SIGNAL, BUS LISTE	SC	1.862.652.21

MCH DATA PROCESSOR 1.862.652.21, Components Side

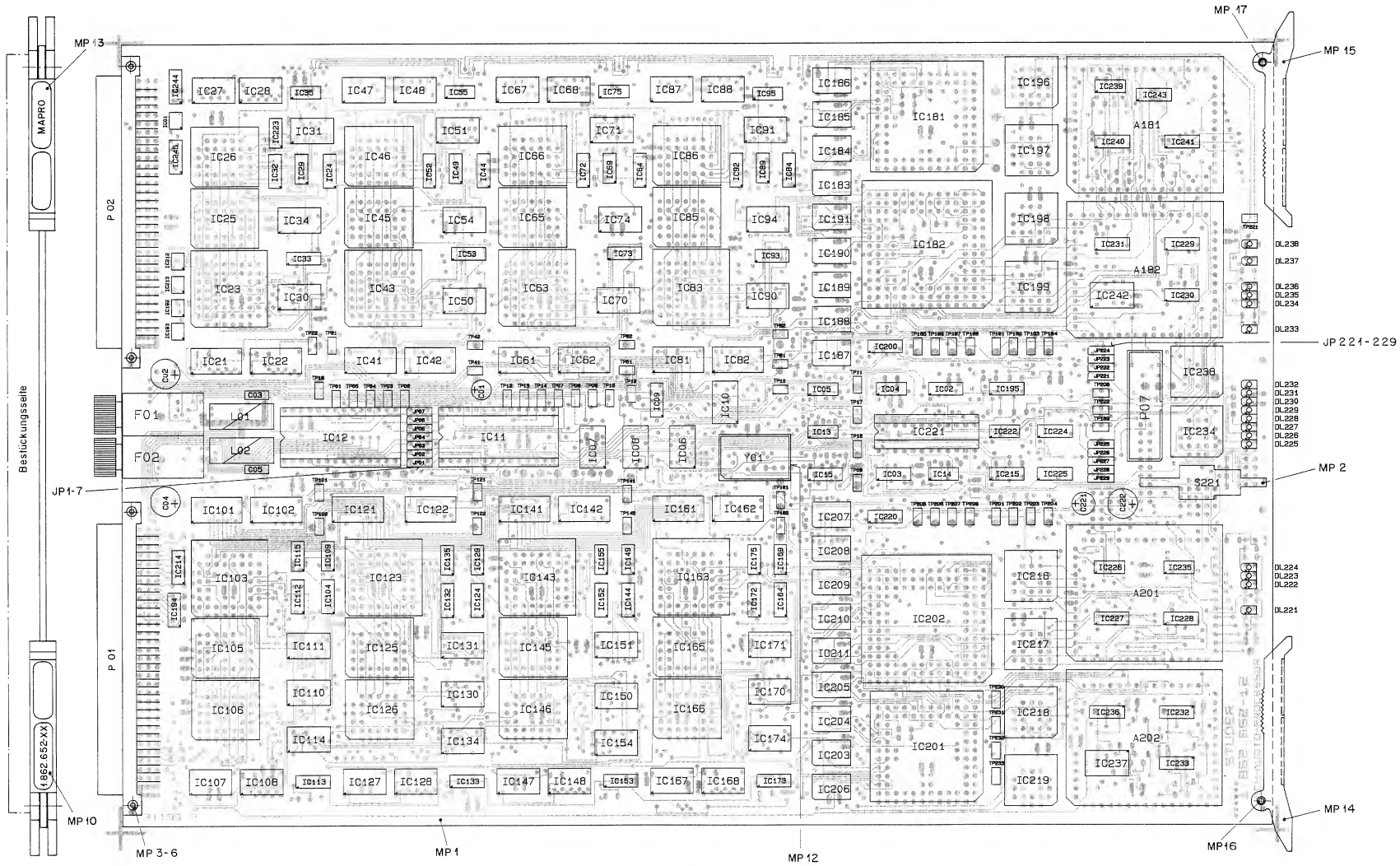

Schilder MP7-11,13
aufgeklebt nach Fabrikationsmuster

IC Sockel nach PL bestückt
Z.B. XIC 11 = Sockel von IC 11

MCH DATA PROCESSOR 1.862.652.21, Soldering Side

MCH DATA PROCESSOR 1.862.652.21

IND.	POS.NO.	PART NO.	VALUE	SPECIFICATIONS / EQUIVALENT	MANUF.
	A...181	1.862.687.00		TBC ASSEMBLY	St
	A...182	1.862.687.00		TBC ASSEMBLY	St
	A...201	1.862.687.00		TBC ASSEMBLY	St
	A...202	1.862.687.00		TBC ASSEMBLY	St
	C.....1	59.22.6100	10 u	20%, 10V, EL	ANY
	C.....2	59.22.3102	1000 u	20%, 10V, EL	ANY
	C.....3	59.06.0683	68 n	20%, GENERAL PURPOSE	ANY
	C.....4	59.22.3102	1000 u	20%, 10V, EL	ANY
	C.....5	59.06.0683	68 n	20%, GENERAL PURPOSE	ANY
	C.....6	59.60.1104	100 n	20%, GENERAL PURPOSE	ANY
	C.....7	59.60.1104	100 n	20%, GENERAL PURPOSE	ANY
	C.....8	59.60.1104	100 n	20%, GENERAL PURPOSE	ANY
	C.....9	59.60.1104	100 n	20%, GENERAL PURPOSE	ANY
	C....10	59.60.1104	100 n	20%, GENERAL PURPOSE	ANY
	C....11	59.60.1104	100 n	20%, GENERAL PURPOSE	ANY
	C....21	59.60.1104	100 n	20%, GENERAL PURPOSE	ANY
	C....22	59.60.1104	100 n	20%, GENERAL PURPOSE	ANY
	C....23	59.60.1104	100 n	20%, GENERAL PURPOSE	ANY
	C....24	59.60.1104	100 n	20%, GENERAL PURPOSE	ANY
	C....25	59.60.1104	100 n	20%, GENERAL PURPOSE	ANY
	C....26	59.60.1104	100 n	20%, GENERAL PURPOSE	ANY
	C....27	59.60.1104	100 n	20%, GENERAL PURPOSE	ANY
	C....28	59.60.1104	100 n	20%, GENERAL PURPOSE	ANY
	C....29	59.60.1104	100 n	20%, GENERAL PURPOSE	ANY
	C....41	59.60.1104	100 n	20%, GENERAL PURPOSE	ANY
	C....42	59.60.1104	100 n	20%, GENERAL PURPOSE	ANY
	C....43	59.60.1104	100 n	20%, GENERAL PURPOSE	ANY
	C....44	59.60.1104	100 n	20%, GENERAL PURPOSE	ANY
	C....45	59.60.1104	100 n	20%, GENERAL PURPOSE	ANY
	C....46	59.60.1104	100 n	20%, GENERAL PURPOSE	ANY
	C....47	59.60.1104	100 n	20%, GENERAL PURPOSE	ANY
	C....48	59.60.1104	100 n	20%, GENERAL PURPOSE	ANY
	C....49	59.60.1104	100 n	20%, GENERAL PURPOSE	ANY
	C....61	59.60.1104	100 n	20%, GENERAL PURPOSE	ANY
	C....62	59.60.1104	100 n	20%, GENERAL PURPOSE	ANY
	C....63	59.60.1104	100 n	20%, GENERAL PURPOSE	ANY

IND.	POS.NO.	PART NO.	VALUE	SPECIFICATIONS / EQUIVALENT	MANUF.
	C....64	59.60.1104	100 n	20%, GENERAL PURPOSE	ANY
	C....65	59.60.1104	100 n	20%, GENERAL PURPOSE	ANY
	C....66	59.60.1104	100 n	20%, GENERAL PURPOSE	ANY
	C....67	59.60.1104	100 n	20%, GENERAL PURPOSE	ANY
	C....68	59.60.1104	100 n	20%, GENERAL PURPOSE	ANY
	C....69	59.60.1104	100 n	20%, GENERAL PURPOSE	ANY
	C....81	59.60.1104	100 n	20%, GENERAL PURPOSE	ANY
	C....82	59.60.1104	100 n	20%, GENERAL PURPOSE	ANY
	C....83	59.60.1104	100 n	20%, GENERAL PURPOSE	ANY
	C....84	59.60.1104	100 n	20%, GENERAL PURPOSE	ANY
	C....85	59.60.1104	100 n	20%, GENERAL PURPOSE	ANY
	C....86	59.60.1104	100 n	20%, GENERAL PURPOSE	ANY
	C....87	59.60.1104	100 n	20%, GENERAL PURPOSE	ANY
	C....88	59.60.1104	100 n	20%, GENERAL PURPOSE	ANY
	C....89	59.60.1104	100 n	20%, GENERAL PURPOSE	ANY
	C...101	59.60.1104	100 n	20%, GENERAL PURPOSE	ANY
	C...102	59.60.1104	100 n	20%, GENERAL PURPOSE	ANY
	C...103	59.60.1104	100 n	20%, GENERAL PURPOSE	ANY
	C...104	59.60.1104	100 n	20%, GENERAL PURPOSE	ANY
	C...105	59.60.1104	100 n	20%, GENERAL PURPOSE	ANY
	C...106	59.60.1104	100 n	20%, GENERAL PURPOSE	ANY
	C...107	59.60.1104	100 n	20%, GENERAL PURPOSE	ANY
	C...108	59.60.1104	100 n	20%, GENERAL PURPOSE	ANY
	C...109	59.60.1104	100 n	20%, GENERAL PURPOSE	ANY
	C...121	59.60.1104	100 n	20%, GENERAL PURPOSE	ANY
	C...122	59.60.1104	100 n	20%, GENERAL PURPOSE	ANY
	C...123	59.60.1104	100 n	20%, GENERAL PURPOSE	ANY
	C...124	59.60.1104	100 n	20%, GENERAL PURPOSE	ANY
	C...125	59.60.1104	100 n	20%, GENERAL PURPOSE	ANY
	C...126	59.60.1104	100 n	20%, GENERAL PURPOSE	ANY
	C...127	59.60.1104	100 n	20%, GENERAL PURPOSE	ANY
	C...128	59.60.1104	100 n	20%, GENERAL PURPOSE	ANY
	C...129	59.60.1104	100 n	20%, GENERAL PURPOSE	ANY
	C...130	59.60.1104	100 n	20%, GENERAL PURPOSE	ANY
	C...131	59.60.1104	100 n	20%, GENERAL PURPOSE	ANY
	C...132	59.60.1104	100 n	20%, GENERAL PURPOSE	ANY
	C...133	59.60.1104	100 n	20%, GENERAL PURPOSE	ANY

IND.	POS.NO.	PART NO.	VALUE	SPECIFICATIONS / EQUIVALENT	MANUF.
	C...134	59.60.1104	100 n	20%, GENERAL PURPOSE	ANY
	C...135	59.60.1104	100 n	20%, GENERAL PURPOSE	ANY
	C...136	59.60.1104	100 n	20%, GENERAL PURPOSE	ANY
	C...137	59.60.1104	100 n	20%, GENERAL PURPOSE	ANY
	C...138	59.60.1104	100 n	20%, GENERAL PURPOSE	ANY
	C...139	59.60.1104	100 n	20%, GENERAL PURPOSE	ANY
	C...140	59.60.1104	100 n	20%, GENERAL PURPOSE	ANY
	C...141	59.60.1104	100 n	20%, GENERAL PURPOSE	ANY
	C...142	59.60.1104	100 n	20%, GENERAL PURPOSE	ANY
	C...143	59.60.1104	100 n	20%, GENERAL PURPOSE	ANY
	C...144	59.60.1104	100 n	20%, GENERAL PURPOSE	ANY
	C...145	59.60.1104	100 n	20%, GENERAL PURPOSE	ANY
	C...146	59.60.1104	100 n	20%, GENERAL PURPOSE	ANY
	C...147	59.60.1104	100 n	20%, GENERAL PURPOSE	ANY
	C...148	59.60.1104	100 n	20%, GENERAL PURPOSE	ANY
	C...149	59.60.1104	100 n	20%, GENERAL PURPOSE	ANY
	C...150	59.60.1104	100 n	20%, GENERAL PURPOSE	ANY
	C...151	59.60.1104	100 n	20%, GENERAL PURPOSE	ANY
	C...152	59.60.1104	100 n	20%, GENERAL PURPOSE	ANY
	C...153	59.60.1104	100 n	20%, GENERAL PURPOSE	ANY
	C...154	59.60.1104	100 n	20%, GENERAL PURPOSE	ANY
	C...155	59.60.1104	100 n	20%, GENERAL PURPOSE	ANY
	C...204	59.60.1104	100 n	20%, GENERAL PURPOSE	ANY
	C...208	59.60.1104	100 n	20%, GENERAL PURPOSE	ANY
	C...209	59.60.1104	100 n	20%, GENERAL PURPOSE	ANY
	C...221	59.22.6100	10 u	20%, 10V, EL	ANY
	C...222	59.22.4101	100 u	20%, 10V, EL	ANY
	C...223	59.60.1223	22 n	20%, GENERAL PURPOSE	ANY
	C...224	59.60.1223	22 n	20%, GENERAL PURPOSE	ANY
	C...225	59.60.1223	22 n	20%, GENERAL PURPOSE	ANY
	C...226	59.60.1223	22 n	20%, GENERAL PURPOSE	ANY
	C...227	59.60.1223	22 n	20%, GENERAL PURPOSE	ANY
	C...228	59.60.1223	22 n	20%, GENERAL PURPOSE	ANY
	C...229	59.60.1104	100 n	20%, GENERAL PURPOSE	ANY
	C...230	59.60.1104	100 n	20%, GENERAL PURPOSE	ANY
	C...231	59.60.1104	100 n	20%, GENERAL PURPOSE	ANY
	C...232	59.60.1104	100 n	20%, GENERAL PURPOSE	ANY

IND.	POS.NO.	PART NO.	VALUE	SPECIFICATIONS / EQUIVALENT	MANUF.
	C...233	59.60.1104	100 n	20%, GENERAL PURPOSE	ANY
	C...234	59.60.1104	100 n	20%, GENERAL PURPOSE	ANY
	C...235	59.60.1104	100 n	20%, GENERAL PURPOSE	ANY
	C...236	59.60.1104	100 n	20%, GENERAL PURPOSE	ANY
	C...237	59.60.1104	100 n	20%, GENERAL PURPOSE	ANY
	C...238	59.60.1104	100 n	20%, GENERAL PURPOSE	ANY
	C...239	59.60.1104	100 n	20%, GENERAL PURPOSE	ANY
	DL..221	50.04.2121	TLUR2400	LED RED, DIFF	ANY
	DL..222	50.04.2132	TLUG2400	LED GRN, DIFF	ANY
	DL..223	50.04.2132	TLUG2400	LED GRN, DIFF	ANY
	DL..224	50.04.2132	TLUG2400	LED GRN, DIFF	ANY
	DL..225	50.04.2121	TLUR2400	LED RED, DIFF	ANY
	DL..226	50.04.2121	TLUR2400	LED RED, DIFF	ANY
	DL..227	50.04.2121	TLUR2400	LED RED, DIFF	ANY
	DL..228	50.04.2132	TLUG2400	LED GRN, DIFF	ANY
	DL..229	50.04.2132	TLUG2400	LED GRN, DIFF	ANY
	DL..230	50.04.2121	TLUR2400	LED RED, DIFF	ANY
	DL..231	50.04.2121	TLUR2400	LED RED, DIFF	ANY
	DL..232	50.04.2121	TLUR2400	LED RED, DIFF	ANY
	DL..233	50.04.2121	TLUR2400	LED RED, DIFF	ANY
	DL..234	50.04.2121	TLUR2400	LED RED, DIFF	ANY
	DL..235	50.04.2121	TLUR2400	LED RED, DIFF	ANY
	DL..236	50.04.2121	TLUR2400	LED RED, DIFF	ANY
	DL..237	50.04.2132	TLUG2400	LED GRN, DIFF	ANY
	DL..238	50.04.2121	TLUR2400	LED RED, DIFF	ANY
(00)	F.....1	51.01.0122		SLOW BLOW,T3,15A	ANY
(01)	F.....1	51.99.0133		MINIFUSE 7A	ANY
(00)	F.....2	51.01.0122		SLOW BLOW,T3,15A	ANY
(01)	F.....2	51.99.0133		MINIFUSE 7A	ANY
	IC....1	50.62.0002		uA 9637 ACD	ANY
	IC....2	50.62.7169		74 F 169	ANY
	IC....3	50.62.7169		74 F 169	ANY
	IC....4	50.62.6000		74 ACT 00	ANY
	IC....5	50.62.7074		74 F 74	ANY

IND.	POS.NO.	PART NO.	VALUE	SPECIFICATIONS / EQUIVALENT	MANUF.
	IC....6	50.62.7244		74 F 244	ANY
	IC....7	50.62.7244		74 F 244	ANY
	IC....8	50.62.7374		74 F 374	ANY
	IC....9	50.62.1138		74 HC 138	ANY
	IC...10	50.62.1540		74 HC 540	ANY
	IC...11	50.50.0010		PORTMASTER	St
	IC...12	50.50.0010		PORTMASTER	St
	IC...13	50.62.7074		74 F 74	ANY
	IC...14	50.62.6000		74 ACT 00	ANY
	IC...15	50.62.1595		74 HC 595	ANY
	IC...21	50.62.2652		74 ALS 652	ANY
	IC...22	50.62.2652		74 ALS 652	ANY
	IC...23	50.63.0400		TMS 320 C10 - 25	ANY
	IC...24	50.62.7139		74 F 139	ANY
	IC...25	50.63.1001		AT 28 HC 64 L-55 (SW 1.862.913.21)	AT
	IC...26	50.63.1001		AT 28 HC 64 L-55 (SW 1.862.914.21)	AT
	IC...27	50.62.5245		74 AC 245	ANY
	IC...28	50.62.5245		74 AC 245	ANY
	IC...29	50.62.1008		74 HC 08	ANY
	IC...30	50.62.6244		74 ACT 244	ANY
	IC...31	50.62.1374		74 HC 374	ANY
	IC...32	50.62.1595		74 HC 595	ANY
	IC...33	50.62.1595		74 HC 595	ANY
	IC...34	50.62.1374		74 HC 374	ANY
	IC...35	50.62.1000		74 HC 00	ANY
	IC...41	50.62.2652		74 ALS 652	ANY
	IC...42	50.62.2652		74 ALS 652	ANY
	IC...43	50.63.0400		TMS 320 C10 - 25	ANY
	IC...44	50.62.7139		74 F 139	ANY
	IC...45	50.63.1001		AT 28 HC 64 L-55 (SW 1.862.913.21)	AT
	IC...46	50.63.1001		AT 28 HC 64 L-55 (SW 1.862.914.21)	AT
	IC...47	50.62.5245		74 AC 245	ANY
	IC...48	50.62.5245		74 AC 245	ANY
	IC...49	50.62.1008		74 HC 08	ANY
	IC...50	50.62.6244		74 ACT 244	ANY
	IC...51	50.62.1374		74 HC 374	ANY
	IC...52	50.62.1595		74 HC 595	ANY

IND.	POS.NO.	PART NO.	VALUE	SPECIFICATIONS / EQUIVALENT	MANUF.
	IC...53	50.62.1595		74 HC 595	ANY
	IC...54	50.62.1374		74 HC 374	ANY
	IC...55	50.62.1000		74 HC 00	ANY
	IC...61	50.62.2652		74 ALS 652	ANY
	IC...62	50.62.2652		74 ALS 652	ANY
	IC...63	50.63.0400		TMS 320 C10 - 25	ANY
	IC...64	50.62.7139		74 F 139	ANY
	IC...65	50.63.1001		AT 28 HC 64 L-55 (SW 1.862.913.21)	AT
	IC...66	50.63.1001		AT 28 HC 64 L-55 (SW 1.862.914.21)	AT
	IC...67	50.62.5245		74 AC 245	ANY
	IC...68	50.62.5245		74 AC 245	ANY
	IC...69	50.62.1008		74 HC 08	ANY
	IC...70	50.62.6244		74 ACT 244	ANY
	IC...71	50.62.1374		74 HC 374	ANY
	IC...72	50.62.1595		74 HC 595	ANY
	IC...73	50.62.1595		74 HC 595	ANY
	IC...74	50.62.1374		74 HC 374	ANY
	IC...75	50.62.1000		74 HC 00	ANY
	IC...81	50.62.2652		74 ALS 652	ANY
	IC...82	50.62.2652		74 ALS 652	ANY
	IC...83	50.63.0400		TMS 320 C10 - 25	ANY
	IC...84	50.62.7139		74 F 139	ANY
	IC...85	50.63.1001		AT 28 HC 64 L-55 (SW 1.862.913.21)	AT
	IC...86	50.63.1001		AT 28 HC 64 L-55 (SW 1.862.914.21)	AT
	IC...87	50.62.5245		74 AC 245	ANY
	IC...88	50.62.5245		74 AC 245	ANY
	IC...89	50.62.1008		74 HC 08	ANY
	IC...90	50.62.6244		74 ACT 244	ANY
	IC...91	50.62.1374		74 HC 374	ANY
	IC...92	50.62.1595		74 HC 595	ANY
	IC...93	50.62.1595		74 HC 595	ANY
	IC...94	50.62.1374		74 HC 374	ANY
	IC...95	50.62.1000		74 HC 00	ANY
	IC..101	50.62.2652		74 ALS 652	ANY
	IC..102	50.62.2652		74 ALS 652	ANY
	IC..103	50.63.0400		TMS 320 C10 - 25	ANY
	IC..104	50.62.7139		74 F 139	ANY

IND.	POS.NO.	PART NO.	VALUE	SPECIFICATIONS / EQUIVALENT	MANUF.
	IC..105	50.63.1001		AT 28 HC 64 L-55 (SW 1.862.913.21)	AT
	IC..106	50.63.1001		AT 28 HC 64 L-55 (SW 1.862.914.21)	AT
	IC..107	50.62.5245		74 AC 245	ANY
	IC..108	50.62.5245		74 AC 245	ANY
	IC..109	50.62.1008		74 HC 08	ANY
	IC..110	50.62.6244		74 ACT 244	ANY
	IC..111	50.62.1374		74 HC 374	ANY
	IC..112	50.62.1595		74 HC 595	ANY
	IC..113	50.62.1595		74 HC 595	ANY
	IC..114	50.62.1374		74 HC 374	ANY
	IC..115	50.62.1000		74 HC 00	ANY
	IC..121	50.62.2652		74 ALS 652	ANY
	IC..122	50.62.2652		74 ALS 652	ANY
	IC..123	50.63.0400		TMS 320 C10 - 25	ANY
	IC..124	50.62.7139		74 F 139	ANY
	IC..125	50.63.1001		AT 28 HC 64 L-55 (SW 1.862.913.21)	AT
	IC..126	50.63.1001		AT 28 HC 64 L-55 (SW 1.862.914.21)	AT
	IC..127	50.62.5245		74 AC 245	ANY
	IC..128	50.62.5245		74 AC 245	ANY
	IC..129	50.62.1008		74 HC 08	ANY
	IC..130	50.62.6244		74 ACT 244	ANY
	IC..131	50.62.1374		74 HC 374	ANY
	IC..132	50.62.1595		74 HC 595	ANY
	IC..133	50.62.1595		74 HC 595	ANY
	IC..134	50.62.1374		74 HC 374	ANY
	IC..135	50.62.1000		74 HC 00	ANY
	IC..141	50.62.2652		74 ALS 652	ANY
	IC..142	50.62.2652		74 ALS 652	ANY
	IC..143	50.63.0400		TMS 320 C10 - 25	ANY
	IC..144	50.62.7139		74 F 139	ANY
	IC..145	50.63.1001		AT 28 HC 64 L-55 (SW 1.862.913.21)	AT
	IC..146	50.63.1001		AT 28 HC 64 L-55 (SW 1.862.914.21)	AT
	IC..147	50.62.5245		74 AC 245	ANY
	IC..148	50.62.5245		74 AC 245	ANY
	IC..149	50.62.1008		74 HC 08	ANY
	IC..150	50.62.6244		74 ACT 244	ANY
	IC..151	50.62.1374		74 HC 374	ANY

IND.	POS.NO.	PART NO.	VALUE	SPECIFICATIONS / EQUIVALENT	MANUF.
	IC..152	50.62.1595		74 HC 595	ANY
	IC..153	50.62.1595		74 HC 595	ANY
	IC..154	50.62.1374		74 HC 374	ANY
	IC..155	50.62.1000		74 HC 00	ANY
	IC..161	50.62.2652		74 ALS 652	ANY
	IC..162	50.62.2652		74 ALS 652	ANY
	IC..163	50.63.0400		TMS 320 C10 - 25	ANY
	IC..164	50.62.7139		74 F 139	ANY
	IC..165	50.63.1001		AT 28 HC 64 L-55 (SW 1.862.913.21)	AT
	IC..166	50.63.1001		AT 28 HC 64 L-55 (SW 1.862.914.21)	AT
	IC..167	50.62.5245		74 AC 245	ANY
	IC..168	50.62.5245		74 AC 245	ANY
	IC..169	50.62.1008		74 HC 08	ANY
	IC..170	50.62.6244		74 ACT 244	ANY
	IC..171	50.62.1374		74 HC 374	ANY
	IC..172	50.62.1595		74 HC 595	ANY
	IC..173	50.62.1595		74 HC 595	ANY
	IC..174	50.62.1374		74 HC 374	ANY
	IC..175	50.62.1000		74 HC 00	ANY
	IC..181	50.62.0901		DASH 001 G	So
	IC..182	50.62.0902		DASH 002 G	So
	IC..183	50.63.1701		TMS 4464 - 12	ANY
	IC..184	50.63.1701		TMS 4464 - 12	ANY
	IC..185	50.63.1701		TMS 4464 - 12	ANY
	IC..186	50.63.1701		TMS 4464 - 12	ANY
	IC..187	50.63.1701		TMS 4464 - 12	ANY
	IC..188	50.63.1701		TMS 4464 - 12	ANY
	IC..189	50.63.1701		TMS 4464 - 12	ANY
	IC..190	50.63.1701		TMS 4464 - 12	ANY
	IC..191	50.63.1701		TMS 4464 - 12	ANY
	IC..192	50.62.0002		uA 9637	ANY
	IC..193	50.62.0002		uA 9637	ANY
	IC..194	50.62.0003		AM 26 LS 31	Ti
	IC..195	50.62.1157		74 HC 157	ANY
	IC..196	50.63.3000		16 V 8 - 25 (SW 1.862.912.20)	ANY
	IC..197	50.63.3000		16 V 8 - 25 (SW 1.862.912.20)	ANY
	IC..198	50.63.3000		16 V 8 - 25 (SW 1.862.912.20)	ANY

IND.	POS.NO.	PART NO.	VALUE	SPECIFICATIONS / EQUIVALENT	MANUF.
	IC..199	50.63.3000		16 V 8 - 25 (SW 1.862.912.20)	ANY
	IC..200	50.62.1157		74 HC 157	ANY
	IC..201	50.62.0901		DASH 001 G	So
	IC..202	50.62.0902		DASH 002 G	So
	IC..203	50.63.1701		TMS 4464 - 12	ANY
	IC..204	50.63.1701		TMS 4464 - 12	ANY
	IC..205	50.63.1701		TMS 4464 - 12	ANY
	IC..206	50.63.1701		TMS 4464 - 12	ANY
	IC..207	50.63.1701		TMS 4464 - 12	ANY
	IC..208	50.63.1701		TMS 4464 - 12	ANY
	IC..209	50.63.1701		TMS 4464 - 12	ANY
	IC..210	50.63.1701		TMS 4464 - 12	ANY
	IC..211	50.63.1701		TMS 4464 - 12	ANY
	IC..212	50.62.0002		uA 9637	ANY
	IC..213	50.62.0002		uA 9637	ANY
	IC..214	50.62.0003		AM 26 LS 31	Ti
	IC..215	50.62.1157		74 HC 157	ANY
	IC..216	50.63.3000		16 V 8 - 25 (SW 1.862.912.20)	ANY
	IC..217	50.63.3000		16 V 8 - 25 (SW 1.862.912.20)	ANY
	IC..218	50.63.3000		16 V 8 - 25 (SW 1.862.912.20)	ANY
	IC..219	50.63.3000		16 V 8 - 25 (SW 1.862.912.20)	ANY
	IC..220	50.62.1157		74 HC 157	ANY
	IC..221	50.62.0904		DASH 004 P	So
	IC..222	50.62.1000		74 HC 00	ANY
	IC..223	50.62.1000		74 HC 00	ANY
	IC..224	50.62.1595		74 HC 595	ANY
	IC..225	50.62.1153		74 HC 153	ANY
	IC..226	50.62.1008		74 HC 08	ANY
	IC..227	50.62.1175		74 HC 175	ANY
	IC..228	50.62.1597		74 HC 597	ANY
	IC..229	50.62.3151		74 HCT 151	ANY
	IC..230	50.62.3151		74 HCT 151	ANY
	IC..231	50.62.3151		74 HCT 151	ANY
	IC..232	50.62.3151		74 HCT 151	ANY
	IC..233	50.62.3151		74 HCT 151	ANY
	IC..234	50.63.3000		16 V 8 - 25 (SW 1.862.911.20)	ANY
	IC..235	50.62.1132		74 HC 132	ANY

IND.	POS.NO.	PART NO.	VALUE	SPECIFICATIONS / EQUIVALENT	MANUF.
	IC..236	50.62.1163		74 HC 163	ANY
	IC..237	50.62.1688		74 HC 688	ANY
	IC..238	50.63.3000		16 V 8 - 25 (SW 1.862.910.20)	ANY
	IC..239	50.62.1010		74 HC 10	ANY
	IC..240	50.62.1423		74 HC 423	ANY
	IC..241	50.62.1423		74 HC 423	ANY
	IC..242	50.62.1540		74 HC 540	ANY
	IC..243	50.62.1423		74 HC 423	ANY
	IC..244	50.62.1597		74 HC 597	ANY
	IC..245	50.62.1597		74 HC 597	ANY
	J.....1	54.01.0021		JUMPER CONNECTOR	ANY
	J.....2	54.01.0021		JUMPER CONNECTOR	ANY
	J.....3	54.01.0021		JUMPER CONNECTOR	ANY
	J.....4	54.01.0021		JUMPER CONNECTOR	ANY
	J.....5	54.01.0021		JUMPER CONNECTOR	ANY
	J.....6	54.01.0021		JUMPER CONNECTOR	ANY
	J.....7	54.01.0021		JUMPER CONNECTOR	ANY
	J...221	54.01.0021		JUMPER CONNECTOR	ANY
	J...222	54.01.0021		JUMPER CONNECTOR	ANY
	J...223	54.01.0021		JUMPER CONNECTOR	ANY
	J...224	54.01.0021		JUMPER CONNECTOR	ANY
	J...225	54.01.0021		JUMPER CONNECTOR	ANY
	J...226	54.01.0021		JUMPER CONNECTOR	ANY
	J...227	54.01.0021		JUMPER CONNECTOR	ANY
	J...228	54.01.0021		JUMPER CONNECTOR	ANY
	J...229	54.01.0021		JUMPER CONNECTOR	ANY
	JP....1	54.01.0020		SIL PIN *** QTY 3 ***	ANY
	JP....2	54.01.0020		SIL PIN *** QTY 3 ***	ANY
	JP....3	54.01.0020		SIL PIN *** QTY 3 ***	ANY
	JP....4	54.01.0020		SIL PIN *** QTY 3 ***	ANY
	JP....5	54.01.0020		SIL PIN *** QTY 3 ***	ANY
	JP....6	54.01.0020		SIL PIN *** QTY 3 ***	ANY
	JP....7	54.01.0020		SIL PIN *** QTY 3 ***	ANY
	JP..221	54.01.0020		SIL PIN *** QTY 3 ***	ANY
	JP..222	54.01.0020		SIL PIN *** QTY 3 ***	ANY

IND.	POS.NO.	PART NO.	VALUE	SPECIFICATIONS / EQUIVALENT	MANUF.
	JP..223	54.01.0020		SIL PIN *** QTY 3 ***	ANY
	JP..224	54.01.0020		SIL PIN *** QTY 3 ***	ANY
	JP..225	54.01.0020		SIL PIN *** QTY 3 ***	ANY
	JP..226	54.01.0020		SIL PIN *** QTY 3 ***	ANY
	JP..227	54.01.0020		SIL PIN *** QTY 3 ***	ANY
	JP..228	54.01.0020		SIL PIN *** QTY 3 ***	ANY
	JP..229	54.01.0020		SIL PIN *** QTY 3 ***	ANY
	L.....1	62.03.0030	110 uH	3 A, FILTER	ANY
	L.....2	62.03.0030	110 uH	3 A, FILTER	ANY
	MP....1	1.862.652.11		PCB	ANY
	MP....2	55.03.0127		CAP FOR TOGGLE-SWITCH, GR	ANY
	MP....3	28.99.0119		RIVETING NUT, D2.5*0.15*10	St
	MP....4	28.99.0119		RIVETING NUT, D2.5*0.15*10	St
	MP....5	28.99.0119		RIVETING NUT, D2.5*0.15*10	St
	MP....6	28.99.0119		RIVETING NUT, D2.5*0.15*10	St
(00)	MP....7	1.010.120.51		TEXT-ETIK. 5*20 (T3.15A)	St
(01)	MP....7	1.010.130.51		TEXT-ETIK. 5*20 (F7.00A)	ST
(00)	MP....8	1.010.120.51		TEXT-ETIK. 5*20 (T3.15A)	St
(01)	MP....8	1.010.130.51		TEXT-ETIK. 5*20 (F7.00A)	ST
	MP....9	43.01.0108		ESE-WARNSCHILD	ANY
	MP...10	1.862.652.01		NR.-ETIKETTE 5 * 20	St
	MP...11	1.101.001.20		TEXT-ETIK. 5*20 HARDWARE -20	St
	MP...12	1.010.003.89		OSZ.-UNTERLAGE	ANY
	MP...13	1.862.652.02		TEXT - ETIKETTE MAPRO	St
	MP...14	1.862.650.05		AUSWERFERHEBEL	St
	MP...15	1.862.650.05		AUSWERFERHEBEL	St
	MP...16	1.862.650.06		AUSWERFERSTIFT	St
	MP...17	1.862.650.06		AUSWERFERSTIFT	St
	P.....1	54.01.0358		CARD CONNECTOR, 3 * 32 EURO SOLDERING	ANY
	P.....2	54.01.0358		CARD CONNECTOR, 3 * 32 EURO SOLDERING	ANY
	P.....7	54.14.2008		CARD CONNECTOR (RIBBON-CABLE), 20-PIN	ANY
	R.....1	57.60.1102	1 k	20%	ANY
	R.....2	57.60.1102	1 k	20%	ANY

IND.	POS.NO.	PART NO.	VALUE	SPECIFICATIONS / EQUIVALENT	MANUF.
	R.....3	57.60.1102	1 k	20%	ANY
	R.....4	57.60.1102	1 k	20%	ANY
	R.....5	57.60.1102	1 k	20%	ANY
	R.....6	57.60.1102	1 k	20%	ANY
	R.....7	57.60.1332	3.3 k	20%	ANY
	R.....8	57.60.1332	3.3 k	20%	ANY
	R.....9	57.60.1332	3.3 k	20%	ANY
	R....10	57.60.1102	1 k	20%	ANY
	R....11	57.60.1332	3.3 k	20%	ANY
	R....12	57.60.1102	1 k	20%	ANY
	R....13	57.60.1102	1 k	20%	ANY
	R....14	57.60.1102	1 k	20%	ANY
	R....15	57.60.1332	3.3 k	20%	ANY
	R....16	57.60.1332	3.3 k	20%	ANY
	R....17	57.60.1332	3.3 k	20%	ANY
	R....18	57.60.1332	3.3 k	20%	ANY
	R....21	57.60.1102	1 k	20%	ANY
	R....22	57.60.1102	1 k	20%	ANY
	R....23	57.60.1102	1 k	20%	ANY
	R....24	57.60.1102	1 k	20%	ANY
	R....25	57.60.1332	3.3 k	20%	ANY
	R....26	57.60.1332	3.3 k	20%	ANY
	R....27	57.60.1332	3.3 k	20%	ANY
	R....41	57.60.1102	1 k	20%	ANY
	R....42	57.60.1102	1 k	20%	ANY
	R....43	57.60.1102	1 k	20%	ANY
	R....44	57.60.1102	1 k	20%	ANY
	R....45	57.60.1332	3.3 k	20%	ANY
	R....46	57.60.1332	3.3 k	20%	ANY
	R....47	57.60.1332	3.3 k	20%	ANY
	R....61	57.60.1102	1 k	20%	ANY
	R....62	57.60.1102	1 k	20%	ANY
	R....63	57.60.1102	1 k	20%	ANY
	R....64	57.60.1102	1 k	20%	ANY
	R....65	57.60.1332	3.3 k	20%	ANY
	R....66	57.60.1332	3.3 k	20%	ANY
	R....67	57.60.1332	3.3 k	20%	ANY

MCH DATA PROCESSOR 1.862.652.21

IND.	POS.NO.	PART NO.	VALUE	SPECIFICATIONS / EQUIVALENT	MANUF.
	R...81	57.60.1102	1 k	20%	ANY
	R...82	57.60.1102	1 k	20%	ANY
	R...83	57.60.1102	1 k	20%	ANY
	R...84	57.60.1102	1 k	20%	ANY
	R...85	57.60.1332	3.3 k	20%	ANY
	R...86	57.60.1332	3.3 k	20%	ANY
	R...87	57.60.1332	3.3 k	20%	ANY
	R..101	57.60.1102	1 k	20%	ANY
	R..102	57.60.1102	1 k	20%	ANY
	R..103	57.60.1102	1 k	20%	ANY
	R..104	57.60.1102	1 k	20%	ANY
	R..105	57.60.1332	3.3 k	20%	ANY
	R..106	57.60.1332	3.3 k	20%	ANY
	R..107	57.60.1332	3.3 k	20%	ANY
	R..121	57.60.1102	1 k	20%	ANY
	R..122	57.60.1102	1 k	20%	ANY
	R..123	57.60.1102	1 k	20%	ANY
	R..124	57.60.1102	1 k	20%	ANY
	R..125	57.60.1332	3.3 k	20%	ANY
	R..126	57.60.1332	3.3 k	20%	ANY
	R..127	57.60.1332	3.3 k	20%	ANY
	R..141	57.60.1102	1 k	20%	ANY
	R..142	57.60.1102	1 k	20%	ANY
	R..143	57.60.1102	1 k	20%	ANY
	R..144	57.60.1102	1 k	20%	ANY
	R..145	57.60.1332	3.3 k	20%	ANY
	R..146	57.60.1332	3.3 k	20%	ANY
	R..147	57.60.1332	3.3 k	20%	ANY
	R..161	57.60.1102	1 k	20%	ANY
	R..162	57.60.1102	1 k	20%	ANY
	R..163	57.60.1102	1 k	20%	ANY
	R..164	57.60.1102	1 k	20%	ANY
	R..165	57.60.1332	3.3 k	20%	ANY
	R..166	57.60.1332	3.3 k	20%	ANY
	R..167	57.60.1332	3.3 k	20%	ANY
	R..181	57.60.1102	1 k	20%	ANY
	R..182	57.60.1102	1 k	20%	ANY

IND.	POS.NO.	PART NO.	VALUE	SPECIFICATIONS / EQUIVALENT	MANUF.
	R..183	57.60.1332	3.3 k	20%	ANY
	R..184	57.60.1332	3.3 k	20%	ANY
	R..185	57.60.1332	3.3 k	20%	ANY
	R..186	57.60.1332	3.3 k	20%	ANY
	R..187	57.60.1332	3.3 k	20%	ANY
	R..188	57.60.1332	3.3 k	20%	ANY
	R..189	57.60.1332	3.3 k	20%	ANY
	R..190	57.60.1332	3.3 k	20%	ANY
	R..191	57.60.1102	1 k	20%	ANY
	R..192	57.60.1102	1 k	20%	ANY
	R..193	57.60.1221	220 E	5%	ANY
	R..194	57.60.1221	220 E	5%	ANY
	R..195	57.60.1221	220 E	5%	ANY
	R..196	57.60.1221	220 E	5%	ANY
	R..201	57.60.1102	1 k	20%	ANY
	R..202	57.60.1102	1 k	20%	ANY
	R..203	57.60.1332	3.3 k	20%	ANY
	R..204	57.60.1332	3.3 k	20%	ANY
	R..205	57.60.1332	3.3 k	20%	ANY
	R..206	57.60.1332	3.3 k	20%	ANY
	R..207	57.60.1332	3.3 k	20%	ANY
	R..208	57.60.1332	3.3 k	20%	ANY
	R..209	57.60.1332	3.3 k	20%	ANY
	R..210	57.60.1332	3.3 k	20%	ANY
	R..211	57.60.1102	1 k	20%	ANY
	R..212	57.60.1102	1 k	20%	ANY
	R..213	57.60.1221	220 E	5%	ANY
	R..214	57.60.1221	220 E	5%	ANY
	R..215	57.60.1221	220 E	5%	ANY
	R..216	57.60.1221	220 E	5%	ANY
	R..222	57.60.1102	1 k	20%	ANY
	R..223	57.60.1102	1 k	20%	ANY
	R..224	57.60.1332	3.3 k	20%	ANY
	R..225	57.60.1102	1 k	20%	ANY
	R..226	57.60.1102	1 k	20%	ANY
	R..227	57.60.1102	1 k	20%	ANY
	R..228	57.60.1223	22 k	20%	ANY

IND.	POS.NO.	PART NO.	VALUE	SPECIFICATIONS / EQUIVALENT	MANUF.
	R..229	57.60.1102	1 k	20%	ANY
	R..230	57.60.1104	100 k	20%	ANY
	R..231	57.60.1102	1 k	20%	ANY
	R..232	57.60.1104	100 k	20%	ANY
	R..233	57.60.1102	1 k	20%	ANY
	R..234	57.60.1104	100 k	20%	ANY
	R..235	57.60.1102	1 k	20%	ANY
	R..236	57.60.1104	100 k	20%	ANY
	R..237	57.60.1102	1 k	20%	ANY
	R..238	57.60.1222	2.2 k	20%	ANY
	R..239	57.60.1222	2.2 k	20%	ANY
	R..240	57.60.1222	2.2 k	20%	ANY
	R..241	57.60.1222	2.2 k	20%	ANY
	R..242	57.60.1104	100 k	20%	ANY
	R..243	57.60.1102	1 k	20%	ANY
	R..244	57.60.1104	100 k	20%	ANY
	R..245	57.60.1102	1 k	20%	ANY
	R..246	57.60.1102	1 k	20%	ANY
	R..247	57.60.1222	2.2 k	20%	ANY
	R..248	57.60.1222	2.2 k	20%	ANY
	R..249	57.60.1222	2.2 k	20%	ANY
	R..250	57.60.1222	2.2 k	20%	ANY
	R..251	57.60.1332	3.3 k	20%	ANY
	R..252	57.60.1332	3.3 k	20%	ANY
	R..253	57.60.1332	3.3 k	20%	ANY
	R..254	57.60.1332	3.3 k	20%	ANY
	R.1221	57.60.1471	470 E	20%	ANY
	R.1222	57.60.1471	470 E	20%	ANY
	R.1223	57.60.1471	470 E	20%	ANY
	R.1224	57.60.1471	470 E	20%	ANY
	R.1225	57.60.1471	470 E	20%	ANY
	R.1226	57.60.1471	470 E	20%	ANY
	R.1227	57.60.1471	470 E	20%	ANY
	R.1228	57.60.1471	470 E	20%	ANY
	R.1229	57.60.1471	470 E	20%	ANY
	R.1230	57.60.1471	470 E	20%	ANY
	R.1231	57.60.1471	470 E	20%	ANY

IND.	POS.NO.	PART NO.	VALUE	SPECIFICATIONS / EQUIVALENT	MANUF.
	R..1232	57.60.1471	470 E	20%	ANY
	R..1233	57.60.1471	470 E	20%	ANY
	R..1234	57.60.1471	470 E	20%	ANY
	R..1235	57.60.1471	470 E	20%	ANY
	R..1236	57.60.1471	470 E	20%	ANY
	R..1237	57.60.1471	470 E	20%	ANY
	R..1238	57.60.1471	470 E	20%	ANY
	R..1239	57.60.1332	3.3 k	20%	ANY
	S...221	55.15.0028		TOGGLE-SWITCH, ON-ON	ANY
	TP....1	54.02.0320		TESTPOINT***QTY59***	ANY
(00)	XF....1	53.03.0118	5*20 mm	FUSE HOLDER	ANY
(01)	XF....1			ENTFAELLT	
(00)	XF....2	53.03.0118	5*20 mm	FUSE HOLDER	ANY
(01)	XF....2			ENTFAELLT	
	XIC..11	53.03.0173		DIL-SOCKET, 28-PIN	ANY
	XIC..12	53.03.0173		DIL-SOCKET, 28-PIN	ANY
	XIC..23	53.03.2244		PLCC-SOCKET, 44-PIN	ANY
	XIC..25	53.03.2232		PLCC-SOCKET, 32-PIN	ANY
	XIC..26	53.03.2232		PLCC-SOCKET, 32-PIN	ANY
	XIC..43	53.03.2244		PLCC-SOCKET, 44-PIN	ANY
	XIC..45	53.03.2232		PLCC-SOCKET, 32-PIN	ANY
	XIC..46	53.03.2232		PLCC-SOCKET, 32-PIN	ANY
	XIC..63	53.03.2244		PLCC-SOCKET, 44-PIN	ANY
	XIC..65	53.03.2232		PLCC-SOCKET, 32-PIN	ANY
	XIC..66	53.03.2232		PLCC-SOCKET, 32-PIN	ANY
	XIC..83	53.03.2244		PLCC-SOCKET, 44-PIN	ANY
	XIC..85	53.03.2232		PLCC-SOCKET, 32-PIN	ANY
	XIC..86	53.03.2232		PLCC-SOCKET, 32-PIN	ANY
	XIC.103	53.03.2244		PLCC-SOCKET, 44-PIN	ANY
	XIC.105	53.03.2232		PLCC-SOCKET, 32-PIN	ANY
	XIC.106	53.03.2232		PLCC-SOCKET, 32-PIN	ANY
	XIC.123	53.03.2244		PLCC-SOCKET, 44-PIN	ANY
	XIC.125	53.03.2232		PLCC-SOCKET, 32-PIN	ANY

IND.	POS.NO.	PART NO.	VALUE	SPECIFICATIONS / EQUIVALENT	MANUF.
	XIC.126	53.03.2232		PLCC-SOCKET, 32-PIN	ANY
	XIC.143	53.03.2244		PLCC-SOCKET, 44-PIN	ANY
	XIC.145	53.03.2232		PLCC-SOCKET, 32-PIN	ANY
	XIC.146	53.03.2232		PLCC-SOCKET, 32-PIN	ANY
	XIC.163	53.03.2244		PLCC-SOCKET, 44-PIN	ANY
	XIC.165	53.03.2232		PLCC-SOCKET, 32-PIN	ANY
	XIC.166	53.03.2232		PLCC-SOCKET, 32-PIN	ANY
	XIC.181	53.03.2000		PGA-SOCKET, 89-PIN	ANY
	XIC.182	53.03.2001		PGA-SOCKET, 135-PIN	ANY
	XIC.196	53.03.2220		PLCC-SOCKET, 20-PIN	ANY
	XIC.197	53.03.2220		PLCC-SOCKET, 20-PIN	ANY
	XIC.198	53.03.2220		PLCC-SOCKET, 20-PIN	ANY
	XIC.199	53.03.2220		PLCC-SOCKET, 20-PIN	ANY
	XIC.201	53.03.2000		PGA-SOCKET, 89-PIN	ANY
	XIC.202	53.03.2001		PGA-SOCKET, 135-PIN	ANY
	XIC.216	53.03.2220		PLCC-SOCKET, 20-PIN	ANY
	XIC.217	53.03.2220		PLCC-SOCKET, 20-PIN	ANY
	XIC.218	53.03.2220		PLCC-SOCKET, 20-PIN	ANY
	XIC.219	53.03.2220		PLCC-SOCKET, 20-PIN	ANY
	XIC.221	53.03.0182		DIL-SOCKET, 24-PIN, MOLDED	ANY
	XIC.234	53.03.2220		PLCC-SOCKET, 20-PIN	ANY
	XIC.238	53.03.2220		PLCC-SOCKET, 20-PIN	ANY
	XIC.240	53.03.0218		SINGLE LINE, QTY. 216	ANY
	Y.....1	89.01.1808		Y-OSC, 27 MHZ	ANY

REMARKS: SERIEVERSION

21: SW-Inhalt von IC 25,45,65,85,105,145,165 = SW-NR.1.862.913.21
SW-Inhalt von IC 26,46,66,86,106,146,166 = SW-NR.1.862.914.21

Aenderungen:

01: SICHERUNG ERSETZ DURCH "MINIFUSE"

MANUFACTURERS:
St = STUDER Se = SONY At = ATMEL Ti = TEXAS INSTRUMENTS

ABBREVIATIONS:
CER = CERAMIC / FILM = FILM TYPE / XF = CLAMP FOR FUSES /
XIC = IC SOCKET

ORIG 90/05/10 (01) 90/09/18

BLOCKDIAGRAM I/O BOARD

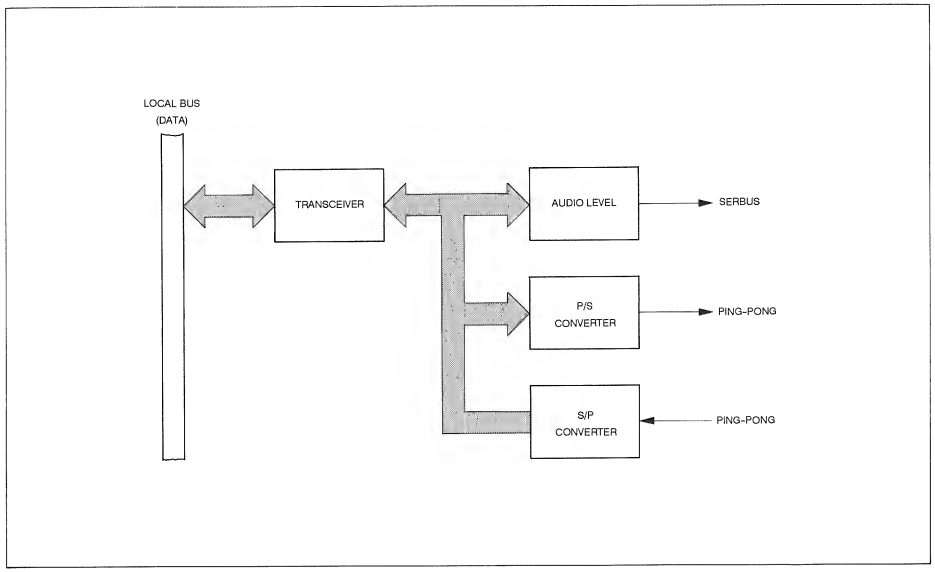

I/O BOARD: LOCAL BUS TO PING-PONG CONVERSION

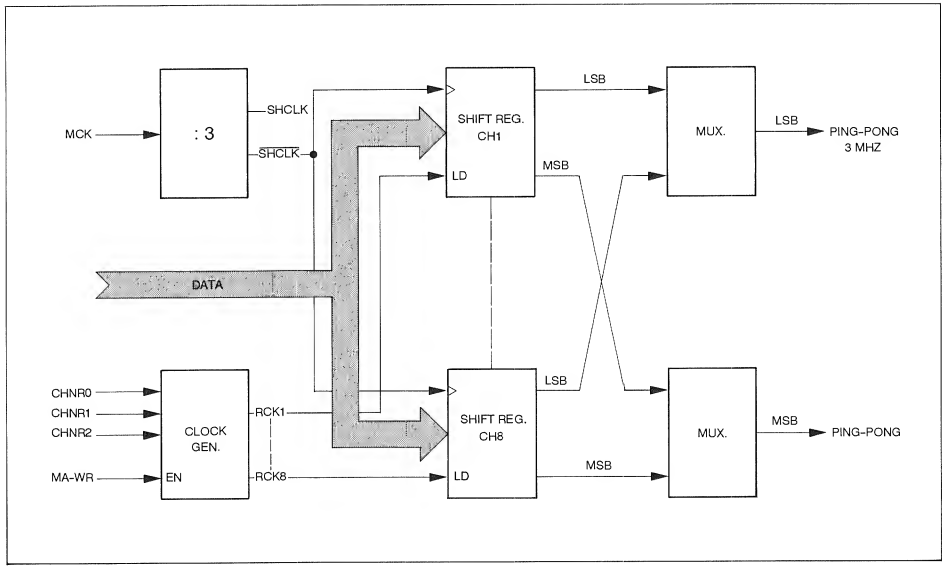

I/O BOARD : LEVEL DETECTION

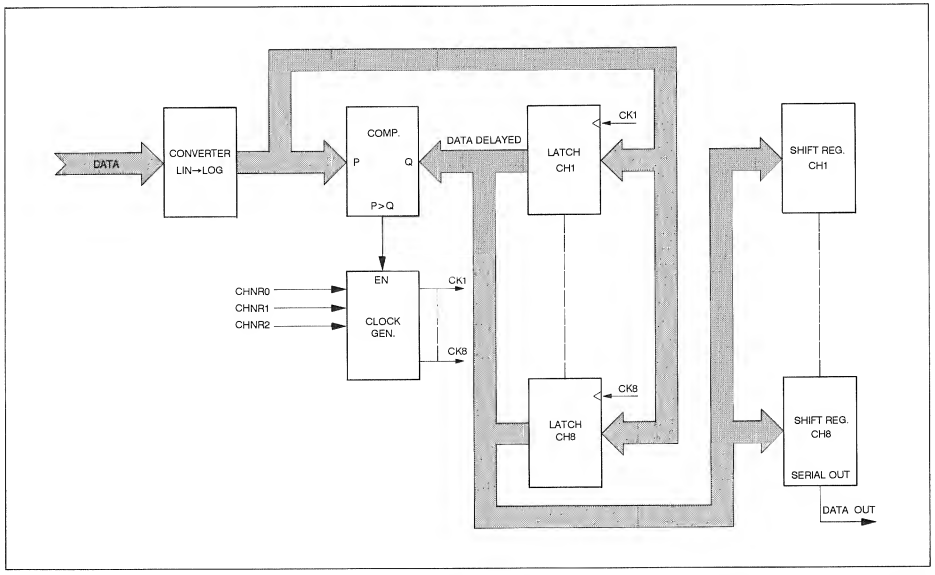

I/O BOARD: PING-PONG TO LOCAL BUS CONVERSION

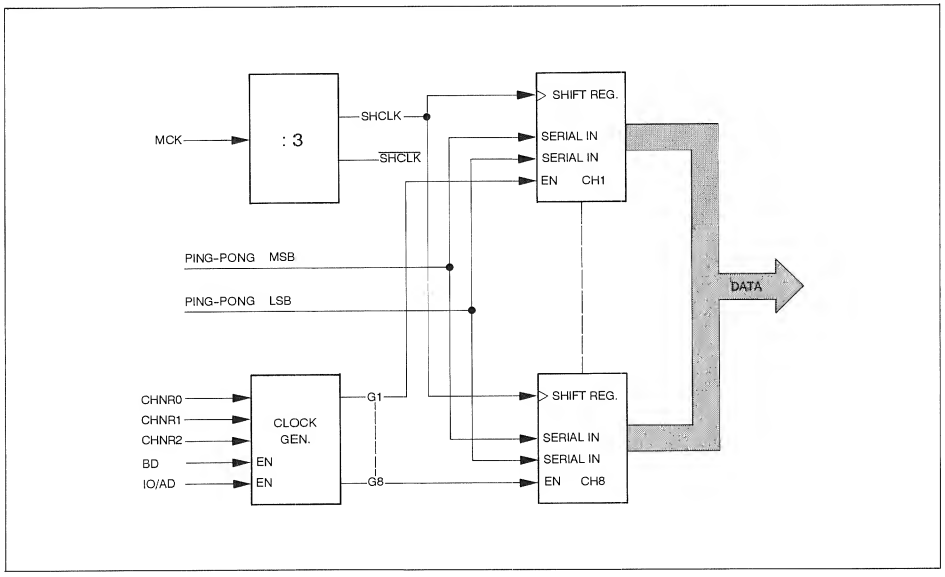

INPUT/OUTPUT BOARD 1.862.653.20

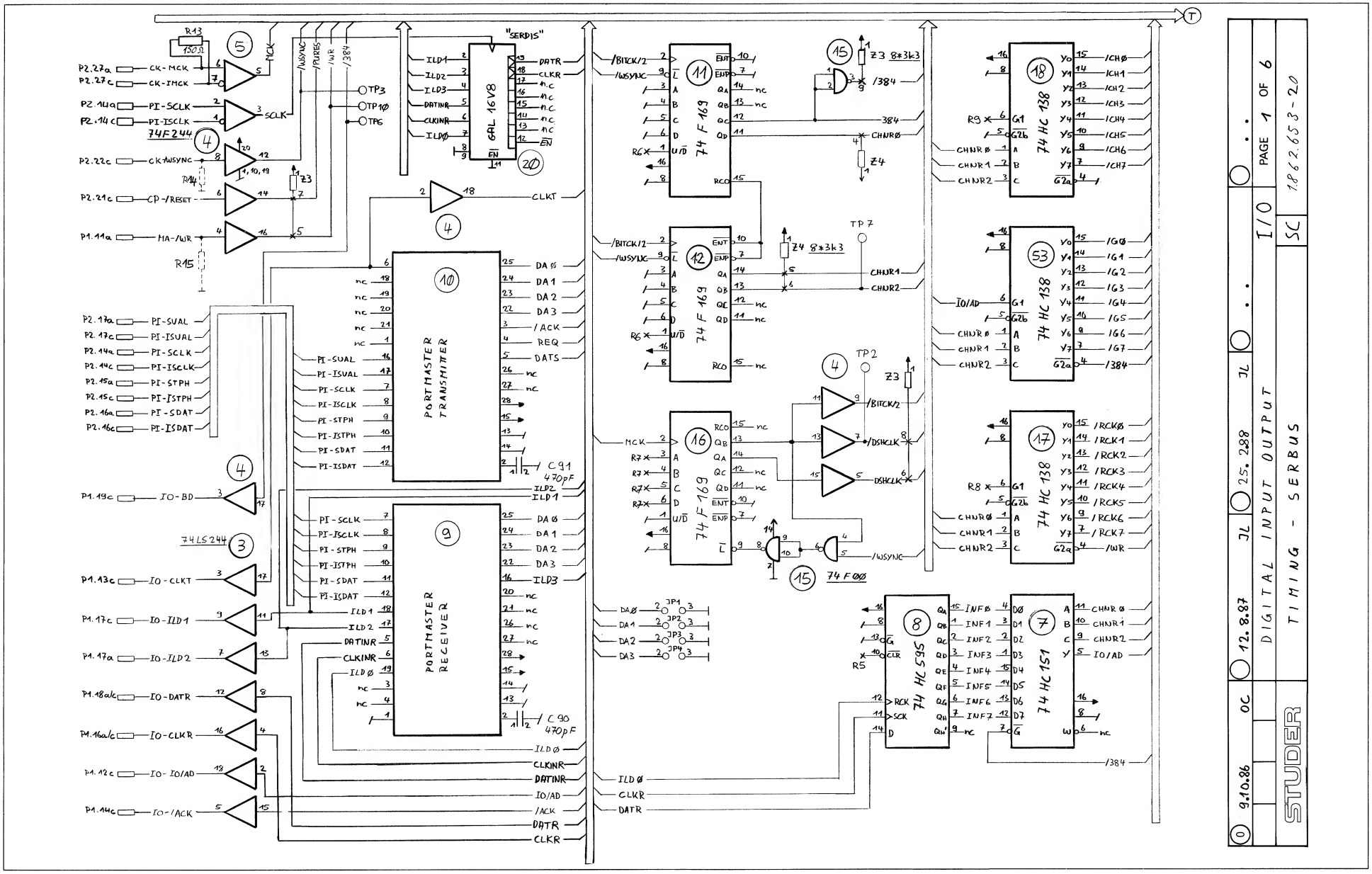

INPUT/OUTPUT BOARD 1.862.653.20

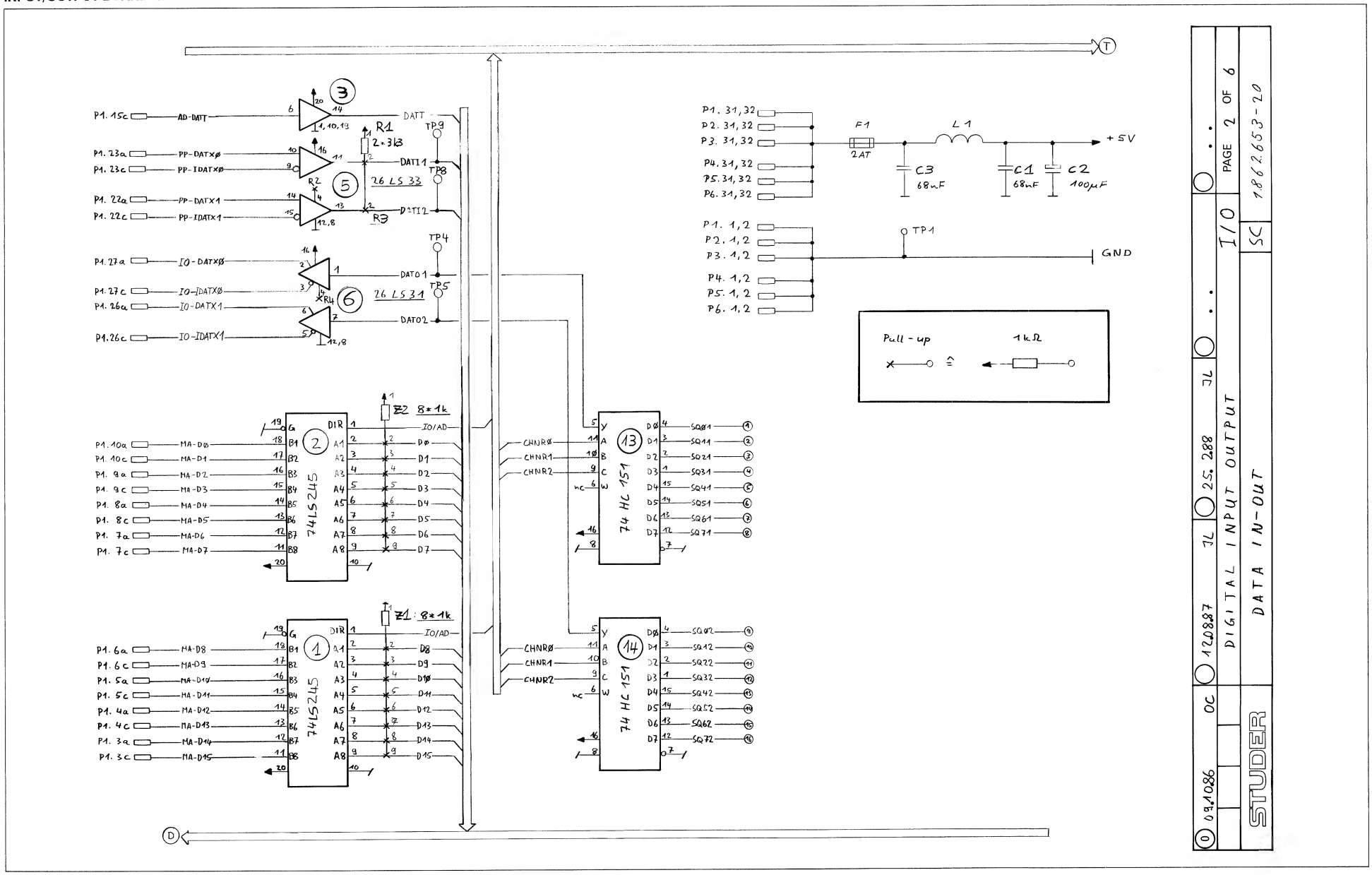

INPUT/OUTPUT BOARD 1.862.653.20

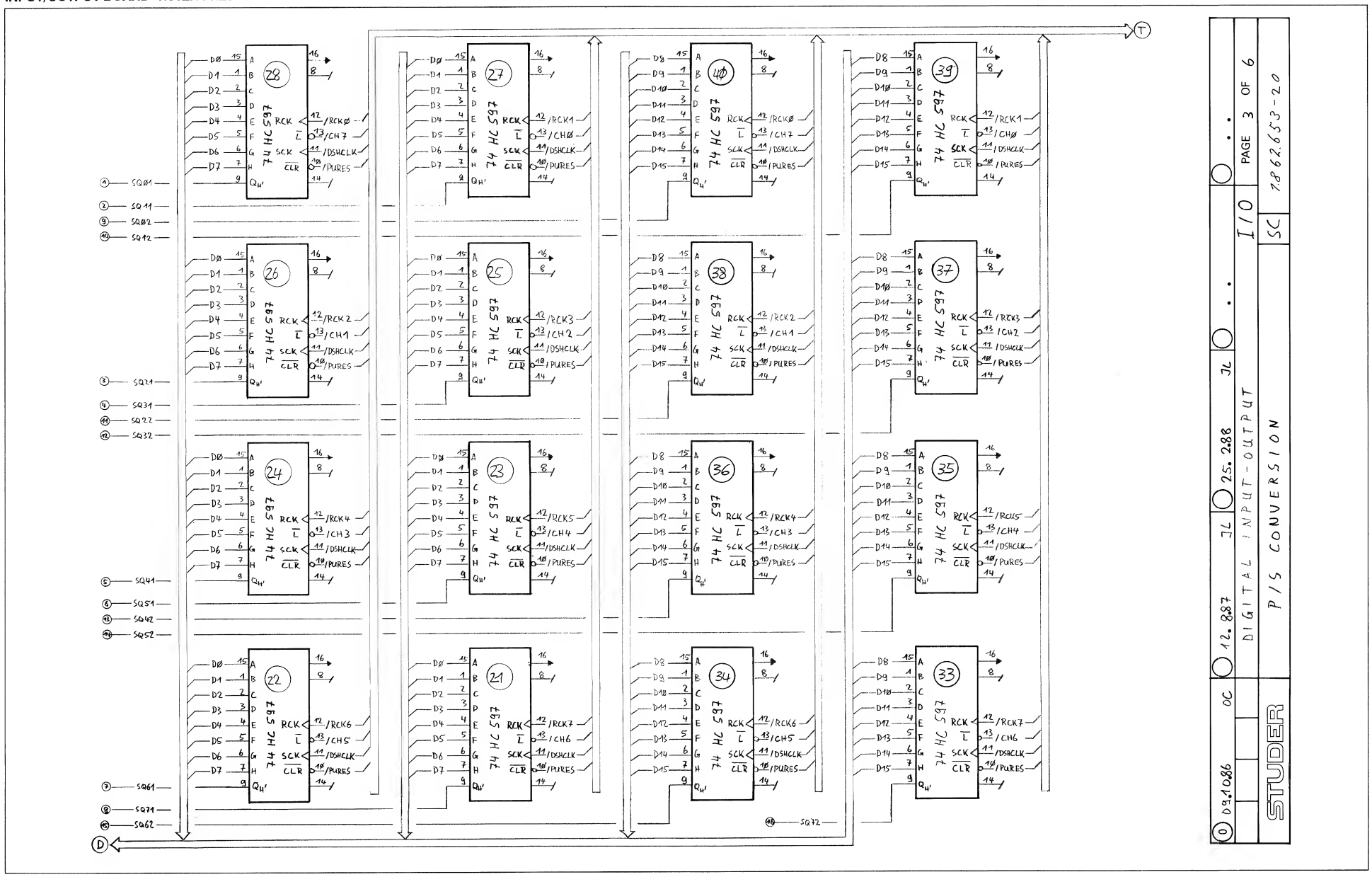

INPUT/OUTPUT BOARD 1.862.653.20

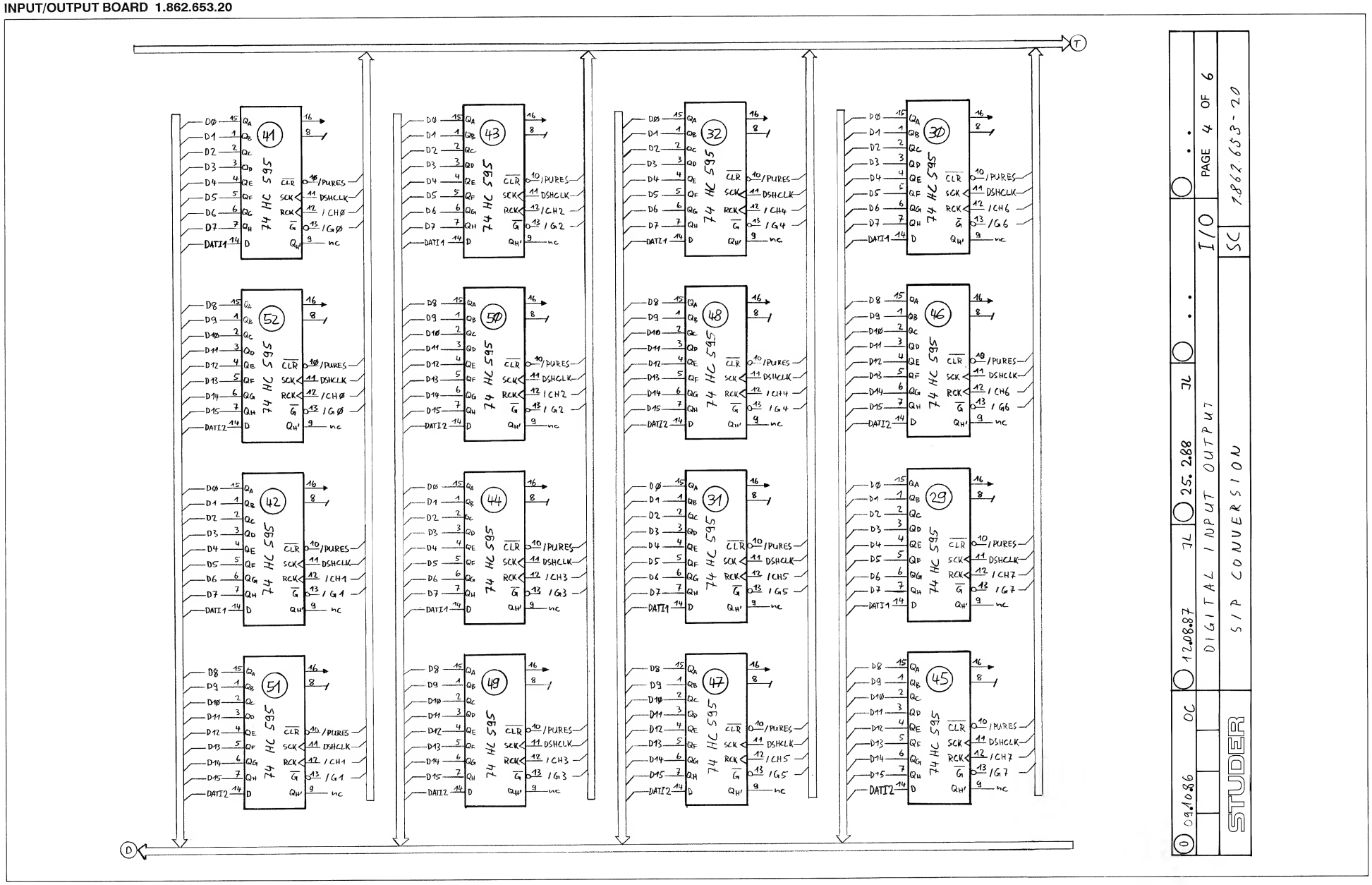

INPUT/OUTPUT BOARD 1.862.653.20

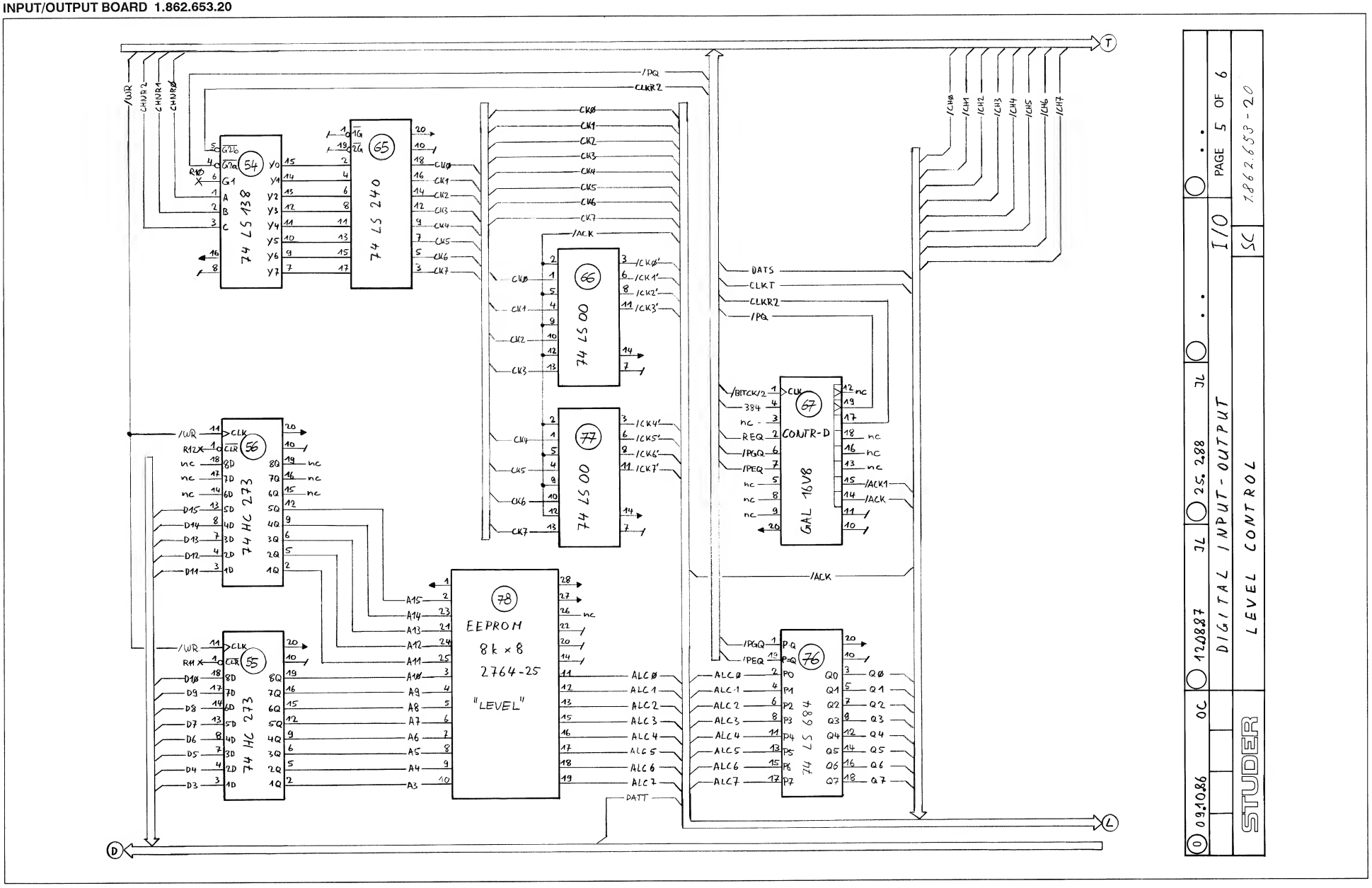

INPUT/OUTPUT BOARD 1.862.653.20

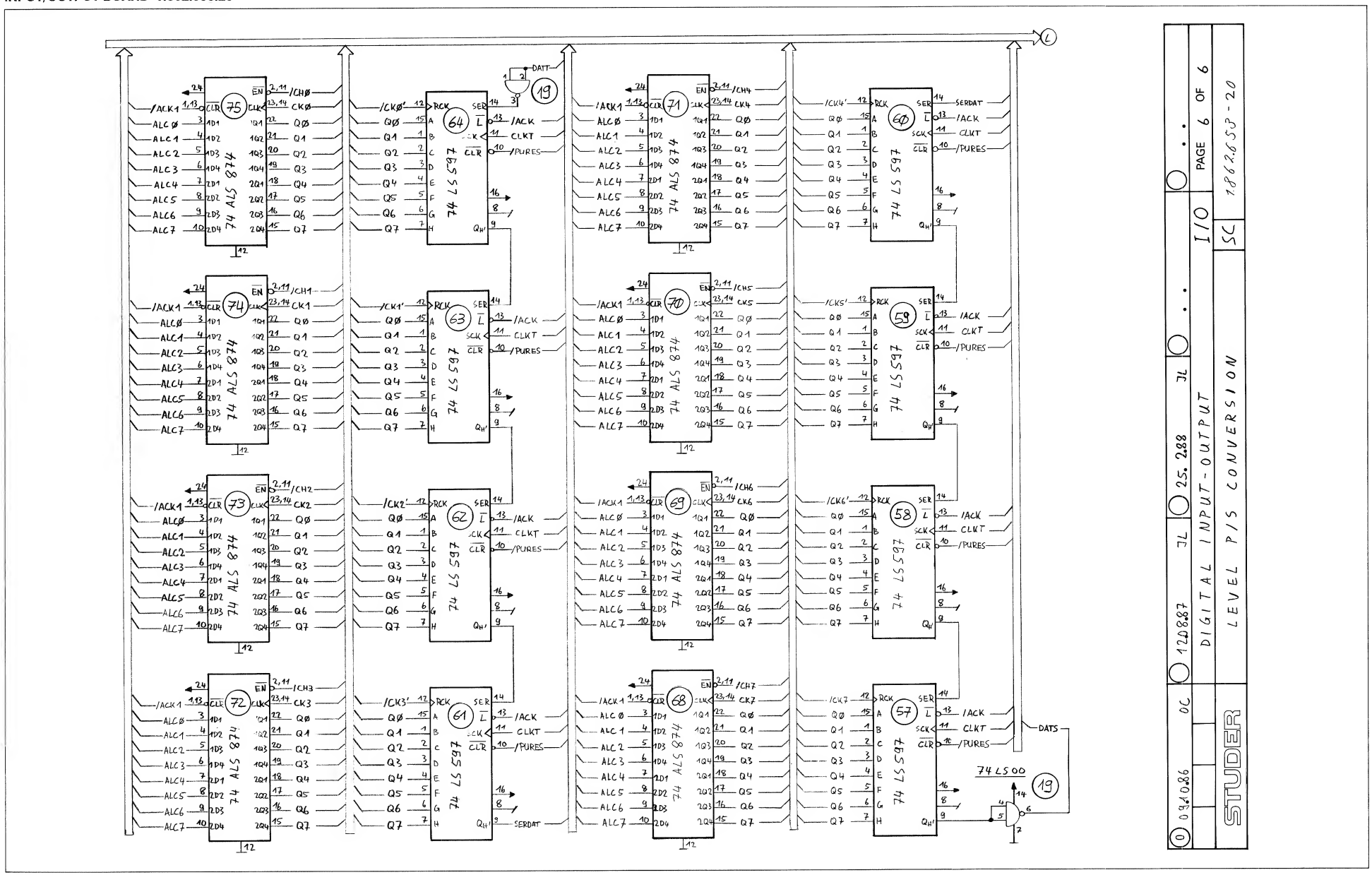

INPUT/OUTPUT BOARD 1.862.653.20

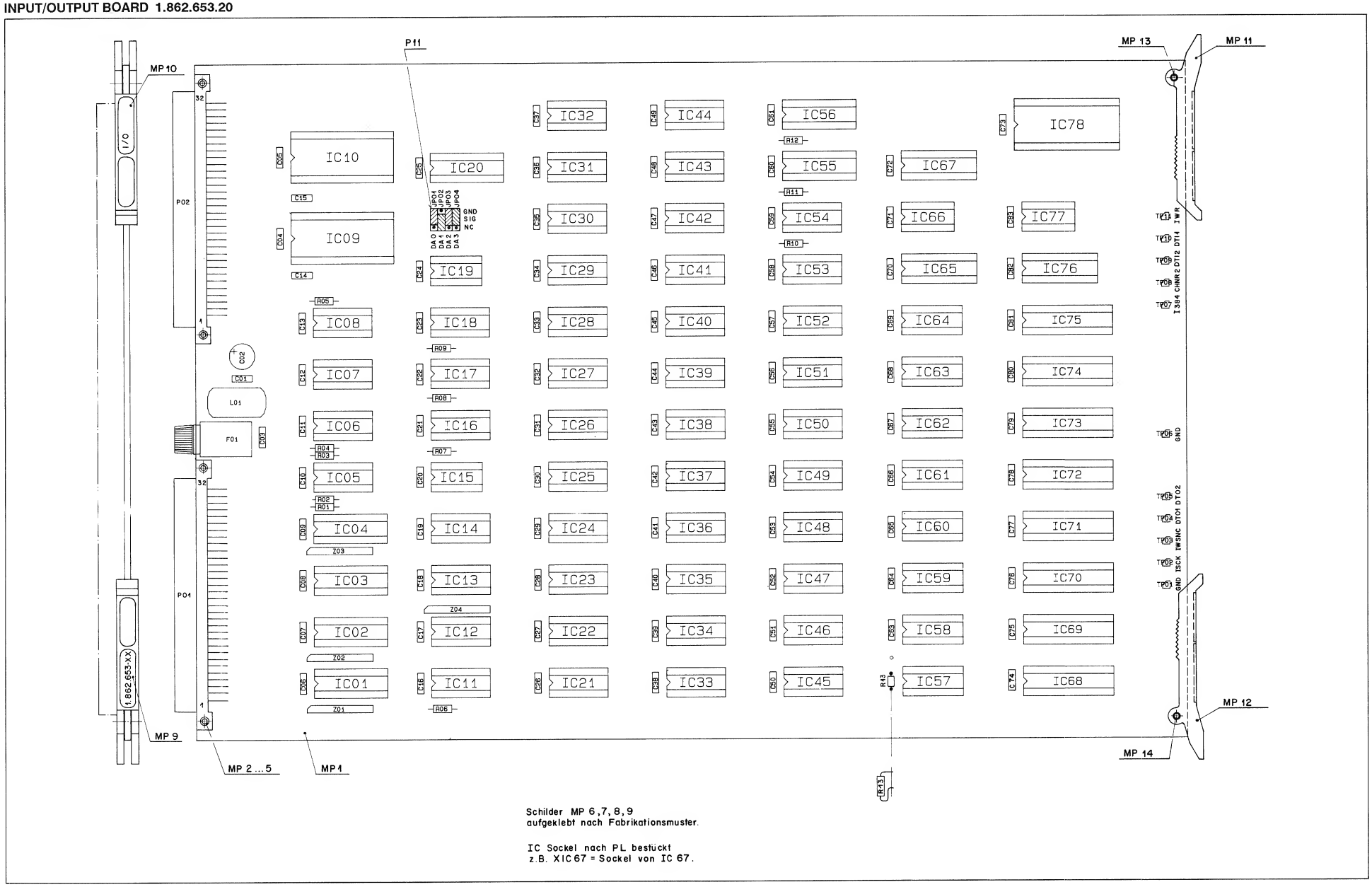

Schilder MP 6,7,8,9
aufgeklebt nach Fabrikationsmuster.

IC Sockel nach PL bestückt
z.B. XIC67 = Sockel von IC 67.

INPUT/OUTPUT BOARD 1.862.653.20

IND.	POS.NO.	PART NO.	VALUE	SPECIFICATIONS / EQUIVALENT	MANUF.
	C..0001	59.06.0683	.068 u	10%, 63V , PETP	ANY
	C..0002	59.22.3471	470 u	-20%, 10V , EL	ANY
	C..0003	59.06.0683	.068 u	10%, 63V , PETP	ANY
	C..0004	59.06.0683	.068 u	10%, 63V , PETP	ANY
	C..0005	59.06.0683	.068 u	10%, 63V , PETP	ANY
	C..0006	59.06.0683	.068 u	10%, 63V , PETP	ANY
	C..0007	59.06.0683	.068 u	10%, 63V , PETP	ANY
	C..0008	59.06.0683	.068 u	10%, 63V , PETP	ANY
	C..0009	59.06.0683	.068 u	10%, 63V , PETP	ANY
	C..0010	59.06.0683	.068 u	10%, 63V , PETP	ANY
	C..0011	59.06.0683	.068 u	10%, 63V , PETP	ANY
	C..0012	59.06.0683	.068 u	10%, 63V , PETP	ANY
	C..0013	59.06.0683	.068 u	10%, 63V , PETP	ANY
	C..0014	59.34.5471	470 p	5%,N1500 , CER	ANY
	C..0015	59.34.5471	470 p	5%,N1500 , CER	ANY
	C..0016	59.06.0683	.068 u	10%, 63V , PETP	ANY
	C..0017	59.06.0683	.068 u	10%, 63V , PETP	ANY
	C..0018	59.06.0683	.068 u	10%, 63V , PETP	ANY
	C..0019	59.06.0683	.068 u	10%, 63V , PETP	ANY
	C..0020	59.06.0683	.068 u	10%, 63V , PETP	ANY
	C..0021	59.06.0683	.068 u	10%, 63V , PETP	ANY
	C..0022	59.06.0683	.068 u	10%, 63V , PETP	ANY
	C..0023	59.06.0683	.068 u	10%, 63V , PETP	ANY
	C..0024	59.06.0683	.068 u	10%, 63V , PETP	ANY
	C..0025	59.06.0683	.068 u	10%, 63V , PETP	ANY
	C..0026	59.06.0683	.068 u	10%, 63V , PETP	ANY
	C..0027	59.06.0683	.068 u	10%, 63V , PETP	ANY
	C..0028	59.06.0683	.068 u	10%, 63V , PETP	ANY
	C..0029	59.06.0683	.068 u	10%, 63V , PETP	ANY
	C..0030	59.06.0683	.068 u	10%, 63V , PETP	ANY
	C..0031	59.06.0683	.068 u	10%, 63V , PETP	ANY
	C..0032	59.06.0683	.068 u	10%, 63V , PETP	ANY
	C..0033	59.06.0683	.068 u	10%, 63V , PETP	ANY
	C..0034	59.06.0683	.068 u	10%, 63V , PETP	ANY
	C..0035	59.06.0683	.068 u	10%, 63V , PETP	ANY
	C..0036	59.06.0683	.068 u	10%, 63V , PETP	ANY
	C..0037	59.06.0683	.068 u	10%, 63V , PETP	ANY

IND.	POS.NO.	PART NO.	VALUE	SPECIFICATIONS / EQUIVALENT	MANUF.
	C..0039	59.06.0683	.068 u	10%, 63V , PETP	ANY
	C..0039	59.06.0683	.068 u	10%, 63V , PETP	ANY
	C..0040	59.06.0683	.068 u	10%, 63V , PETP	ANY
	C..0041	59.06.0683	.068 u	10%, 63V , PETP	ANY
	C..0042	59.06.0683	.068 u	10%, 63V , PETP	ANY
	C..0043	59.06.0683	.068 u	10%, 63V , PETP	ANY
	C..0044	59.06.0683	.068 u	10%, 63V , PETP	ANY
	C..0045	59.06.0683	.068 u	10%, 63V , PETP	ANY
	C..0046	59.06.0683	.068 u	10%, 63V , PETP	ANY
	C..0047	59.06.0683	.068 u	10%, 63V , PETP	ANY
	C..0048	59.06.0683	.068 u	10%, 63V , PETP	ANY
	C..0049	59.06.0683	.068 u	10%, 63V , PETP	ANY
	C..0050	59.06.0683	.068 u	10%, 63V , PETP	ANY
	C..0051	59.06.0683	.068 u	10%, 63V , PETP	ANY
	C..0052	59.06.0683	.068 u	10%, 63V , PETP	ANY
	C..0053	59.06.0683	.068 u	10%, 63V , PETP	ANY
	C..0054	59.06.0683	.068 u	10%, 63V , PETP	ANY
	C..0055	59.06.0683	.068 u	10%, 63V , PETP	ANY
	C..0056	59.06.0683	.068 u	10%, 63V , PETP	ANY
	C..0057	59.06.0683	.068 u	10%, 63V , PETP	ANY
	C..0058	59.06.0683	.068 u	10%, 63V , PETP	ANY
	C..0059	59.06.0683	.068 u	10%, 63V , PETP	ANY
	C..0060	59.06.0683	.068 u	10%, 63V , PETP	ANY
	C..0061	59.06.0683	.068 u	10%, 63V , PETP	ANY
	C..0062	59.06.0683	.068 u	10%, 63V , PETP	ANY
(00)	C..0062				
(01)	C..0062				
	C..0063	59.06.0683	.068 U	10%, 63V , PETP	ANY
	C..0064	59.06.0683	.068 u	10%, 63V , PETP	ANY
	C..0065	59.06.0683	.068 u	10%, 63V , PETP	ANY
	C..0066	59.06.0683	.068 u	10%, 63V , PETP	ANY
	C..0067	59.06.0683	.068 u	10%, 63V , PETP	ANY
	C..0068	59.06.0683	.068 u	10%, 63V , PETP	ANY
	C..0069	59.06.0683	.068 u	10%, 63V , PETP	ANY
	C..0070	59.06.0683	.068 u	10%, 63V , PETP	ANY
	C..0071	59.06.0683	.068 u	10%, 63V , PETP	ANY
	C..0072	59.06.0683	.068 u	10%, 63V , PETP	ANY
	C..0073	59.06.0683	.068 u	10%, 63V , PETP	ANY

IND.	POS.NO.	PART NO.	VALUE	SPECIFICATIONS / EQUIVALENT	MANUF.
	C..0074	59.06.0683	.068 u	10%, 63V , PETP	ANY
	C..0075	59.06.0683	.068 u	10%, 63V , PETP	ANY
	C..0076	59.06.0683	.068 u	10%, 63V , PETP	ANY
	C..0077	59.06.0683	.068 u	10%, 63V , PETP	ANY
	C..0078	59.06.0683	.068 u	10%, 63V , PETP	ANY
	C..0079	59.06.0683	.068 u	10%, 63V , PETP	ANY
	C..0080	59.06.0683	.068 u	10%, 63V , PETP	ANY
	C..0081	59.06.0683	.068 u	10%, 63V , PETP	ANY
	C..0082	59.06.0683	.068 u	10%, 63V , PETP	ANY
	C..0083	59.06.0683	.068 u	10%, 63V , PETP	ANY
	F..0001	51.01.0120		T2.00A / 250V	ANY
	IC.0001	50.06.0245		SN 74 LS 245 N TTL-3	ANY
	IC.0002	50.06.0245		SN 74 LS 245 N TTL-3	ANY
	IC.0003	50.06.0244		SN 74 LS 244 N TTL-3	ANY
	IC.0004	50.21.0244		.. 74 F 244 ..	ANY
	IC.0005	50.15.0109		AM26 LS33 PC/DS26 LS33 CN	ANY
	IC.0006	50.15.0108		AM26 LS 31 PC/AM26 LS31 CN	ANY
	IC.0007	50.17.1151		.. 74 HC 151 .. /A	ANY
	IC.0008	50.17.1595		.. 74 HC 595 .. /A	ANY
	IC.0009	50.50.0010		PORTMASTER	St
	IC.0010	50.50.0010		PORTMASTER	St
	IC.0011	50.21.0169		.. 74 F 169 ..	ANY
	IC.0012	50.21.0169		.. 74 F 169 ..	ANY
	IC.0013	50.17.1151		.. 74 HC 151 .. /A	ANY
	IC.0014	50.17.1151		.. 74 HC 151 .. /A	ANY
	IC.0015	50.21.0000		.. 74 F 00 ..	ANY
	IC.0016	50.21.0169		.. 74 F 169 ..	ANY
	IC.0017	50.17.1138		.. 74 HC 138 .. /A	ANY
	IC.0018	50.17.1138		.. 74 HC 138 .. /A	ANY
	IC.0019	50.06.0000		SN 74 LS 00 N TTL	ANY
	IC.0020	50.18.0100		16 V 8 - 25 LP (SW 1.862.915.20)	ANY
	IC.0021	50.17.1597		.. 74 HC 597 .. /A	ANY
	IC.0022	50.17.1597		.. 74 HC 597 .. /A	ANY
	IC.0023	50.17.1597		.. 74 HC 597 .. /A	ANY
	IC.0024	50.17.1597		.. 74 HC 597 .. /A	ANY

IND.	POS.NO.	PART NO.	VALUE	SPECIFICATIONS / EQUIVALENT	MANUF.
	IC.0025	50.17.1597		.. 74 HC 597 .. /A	ANY
	IC.0025	50.17.1597		.. 74 HC 597 .. /A	ANY
	IC.0027	50.17.1597		.. 74 HC 597 .. /A	ANY
	IC.0028	50.17.1597		.. 74 HC 597 .. /A	ANY
	IC.0029	50.17.1595		.. 74 HC 595 .. /A	ANY
	IC.0030	50.17.1595		.. 74 HC 595 .. /A	ANY
	IC.0031	50.17.1595		.. 74 HC 595 .. /A	ANY
	IC.0032	50.17.1595		.. 74 HC 595 .. /A	ANY
	IC.0033	50.17.1597		.. 74 HC 597 .. /A	ANY
	IC.0034	50.17.1597		.. 74 HC 597 .. /A	ANY
	IC.0035	50.17.1597		.. 74 HC 597 .. /A	ANY
	IC.0036	50.17.1597		.. 74 HC 597 .. /A	ANY
	IC.0037	50.17.1597		.. 74 HC 597 .. /A	ANY
	IC.0038	50.17.1597		.. 74 HC 597 .. /A	ANY
	IC.0039	50.17.1597		.. 74 HC 597 .. /A	ANY
	IC.0040	50.17.1597		.. 74 HC 597 .. /A	ANY
	IC.0041	50.17.1595		.. 74 HC 595 .. /A	ANY
	IC.0042	50.17.1595		.. 74 HC 595 .. /A	ANY
	IC.0043	50.17.1595		.. 74 HC 595 .. /A	ANY
	IC.0044	50.17.1595		.. 74 HC 595 .. /A	ANY
	IC.0045	50.17.1595		.. 74 HC 595 .. /A	ANY
	IC.0046	50.17.1595		.. 74 HC 595 .. /A	ANY
	IC.0047	50.17.1595		.. 74 HC 595 .. /A	ANY
	IC.0048	50.17.1595		.. 74 HC 595 .. /A	ANY
	IC.0049	50.17.1595		.. 74 HC 595 .. /A	ANY
	IC.0050	50.17.1595		.. 74 HC 595 .. /A	ANY
	IC.0051	50.17.1595		.. 74 HC 595 .. /A	ANY
	IC.0052	50.17.1595		.. 74 HC 595 .. /A	ANY
	IC.0053	50.17.1138		.. 74 HC 138 .. /A	ANY
	IC.0054	50.06.0138		SN 74 LS 138 N TTL	ANY
	IC.0055	50.17.1273		.. 74 HC 273 .. /A	ANY
	IC.0056	50.17.1273		.. 74 HC 273 .. /A	ANY
	IC.0057	50.06.0597		SN 74 LS 597 N	ANY
	IC.0058	50.06.0597		SN 74 LS 597 N	ANY
	IC.0059	50.06.0597		SN 74 LS 597 N	ANY
	IC.0060	50.06.0597		SN 74 LS 597 N	ANY
	IC.0061	50.06.0597		SN 74 LS 597 N	ANY

IND.	POS.NO.	PART NO.	VALUE	SPECIFICATIONS / EQUIVALENT	MANUF.
	IC.0062	50.06.0597		SN 74 LS 597 N	ANY
	IC.0063	50.06.0597		SN 74 LS 597 N	ANY
	IC.0064	50.06.0597		SN 74 LS 597 N	ANY
	IC.0065	50.06.0240		SN 74 LS 240 N TTL-3	ANY
	IC.0066	50.06.0000		SN 74 LS 00 N TTL	ANY
	IC.0067	50.18.0100		16 V 8 - 25 LP (SW 1.862.916.20)	ANY
	IC.0068	50.06.1874		SN 74 ALS 874 N	ANY
	IC.0069	50.06.1874		SN 74 ALS 874 N	ANY
	IC.0070	50.06.1874		SN 74 ALS 874 N	ANY
	IC.0071	50.06.1874		SN 74 ALS 874 N	ANY
	IC.0072	50.06.1874		SN 74 ALS 874 N	ANY
	IC.0073	50.06.1874		SN 74 ALS 874 N	ANY
	IC.0074	50.06.1874		SN 74 ALS 874 N	ANY
	IC.0075	50.06.1874		SN 74 ALS 874 N	ANY
	IC.0076	50.06.0684		SN 74 LS 684 N	ANY
	IC.0077	50.06.0000		SN 74 LS 00 N TTL	ANY
	IC.0078	50.14.0155		NMC 27 C 64 Q 200 (SW 1.862.917.20)	ANY
	J..0001	54.01.0021		JUMPER CONNECTOR	ANY
	J..0002	54.01.0021		JUMPER CONNECTOR	ANY
	J..0003	54.01.0021		JUMPER CONNECTOR	ANY
	J..0004	54.01.0021		JUMPER CONNECTOR	ANY
	L..0001	62.03.0010	48 uH	WIDEBAND HF CHOKE	ANY
	MP.0001	1.862.653.11		INPUT/OUTPUT PCB	St
	MP.0002	28.99.0119		RIVETING NUT, D 2.5x0.15x 10	ANY
	MP.0003	28.99.0119		RIVETING NUT, D 2.5x0.15x 10	ANY
	MP.0004	28.99.0119		RIVETING NUT, D 2.5x0.15x 10	ANY
	MP.0005	28.99.0119		RIVETING NUT, D 2.5x0.15x 10	ANY
	MP.0006	1.010.118.51		TEXT-ETIK. 5x20 (T2.00A)	St
	MP.0007	43.01.0108		ESD-WARNSCHILD	ANY
	MP.0008	1.101.001.20		TEXT-ETIK. 5x20 HARDWARE -20	St
	MP.0009	1.862.653.01		NR.-ETIKETTE 5 x 20	St
(02)	MP...10	1.862.653.02		LABEL "I/O"	St
(02)	MP...11	1.862.653.05		AUSWERFERHEBEL	St
(02)	MP...12	1.862.653.05		AUSWERFERHEBEL	St

IND.	POS.NO.	PART NO.	VALUE	SPECIFICATIONS / EQUIVALENT	MANUF.
(02)	MP...13	1.862.653.06		AUSWERFERSTIFT	St
(02)	MP...14	1.862.653.06		AUSWERFERSTIFT	St
	P..0001	54.01.0358		CONNECTOR 3 x 32 EURO PRINT	ANY
	P..0002	54.01.0358		CONNECTOR 3 x 32 EURO PRINT	ANY
	P..0011	54.01.0020		STIFTLEISTE 4GTY 12 **********	ANY
	R..0001	57.11.3332	3.3 k	1%, 0207 , MF	ANY
	R..0002	57.11.3102	1.0 k	1%, 0207 , MF	ANY
	R..0003	57.11.3332	3.3 k	1%, 0207 , MF	ANY
	R..0004	57.11.3102	1.0 k	1%, 0207 , MF	ANY
	R..0005	57.11.3102	1.0 k	1%, 0207 , MF	ANY
	R..0006	57.11.3102	1.0 k	1%, 0207 , MF	ANY
	R..0007	57.11.3102	1.0 k	1%, 0207 , MF	ANY
	R..0008	57.11.3102	1.0 k	1%, 0207 , MF	ANY
	R..0009	57.11.3102	1.0 k	1%, 0207 , MF	ANY
	R..0010	57.11.3102	1.0 k	1%, 0207 , MF	ANY
	R..0011	57.11.3102	1.0 k	1%, 0207 , MF	ANY
	R..0012	57.11.3102	1.0 k	1%, 0207 , MF	ANY
(01)	R..0013	57.11.3151	150 E	1%, 0207 , MF	ANY
	RZ.0001	57.88.4102		8 x 1.0 k, 2%, SIP 9	ANY
	RZ.0002	57.88.4102		8 x 1.0 k, 2%, SIP 9	ANY
	RZ.0003	57.88.4332		8 x 3.3 k, 2%, SIP 9	ANY
	RZ.0004	57.88.4332		8 x 3.3 k, 2%, SIP 9	ANY
	TP.0001	54.02.0320		TESTPOINT	ANY
	TP.0002	54.02.0320		TESTPOINT	ANY
	TP.0003	54.02.0320		TESTPOINT	ANY
	TP.0004	54.02.0320		TESTPOINT	ANY
	TP.0005	54.02.0320		TESTPOINT	ANY
	TP.0006	54.02.0320		TESTPOINT	ANY
	TP.0007	54.02.0320		TESTPOINT	ANY
	TP.0008	54.02.0320		TESTPOINT	ANY
	TP.0009	54.02.0320		TESTPOINT	ANY
	TP.0010	54.02.0320		TESTPOINT	ANY
	TP.0011	54.02.0320		TESTPOINT	ANY

IND.	POS.NO.	PART NO.	VALUE	SPECIFICATIONS / EQUIVALENT	MANUF.
	XF.0001	53.03.0118		FUSE HOLDER	ANY
	XIC0020	53.03.0165		DIL 20-POL, LOET	ANY
	XIC0067	53.03.0165		DIL 20-POL, LOET	ANY
	XIC0078	53.03.0173		DIL 28-POL,	ANY

REMARKS: SERIEVERSION PREIGABE: 12.04.89
****
Aenderungen:
OZ1 NF 10-14 neu (Print-Auswerfer)

MANUFACTURERS:
St = STUDER Ph = PHILIPS

ABBREVIATIONS:
CER = CERAMIC / FILM = FILM TYPE / XF = CLAMP FOR FUSES /
XIC = IC SOCKET

ORIG 88/09/12 (01) 89/08/10 (02) 90/06/25

BLOCK DIAGRAM CPU INTERFACE

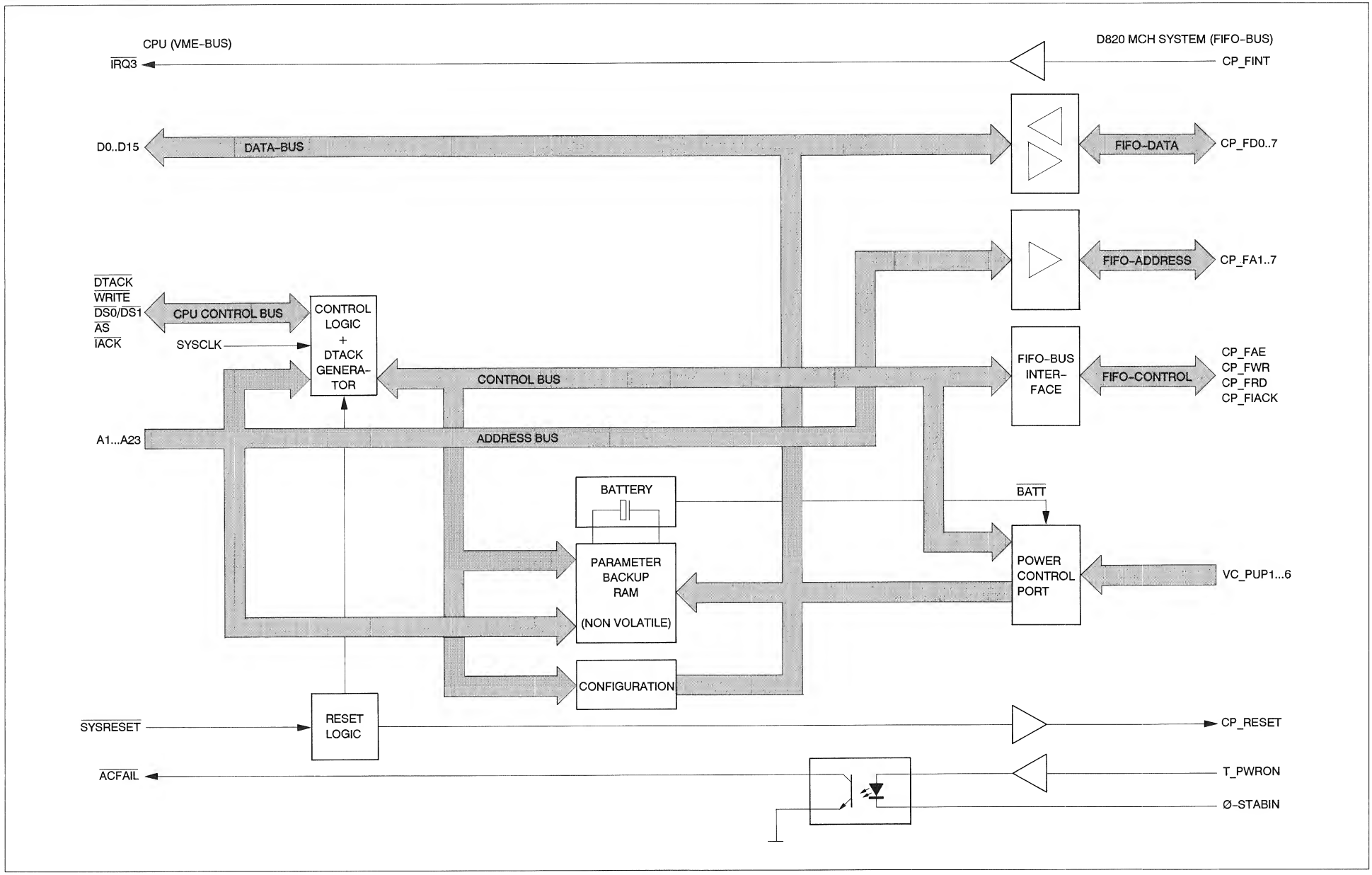

CPU INTERFACE 1.862.654.20

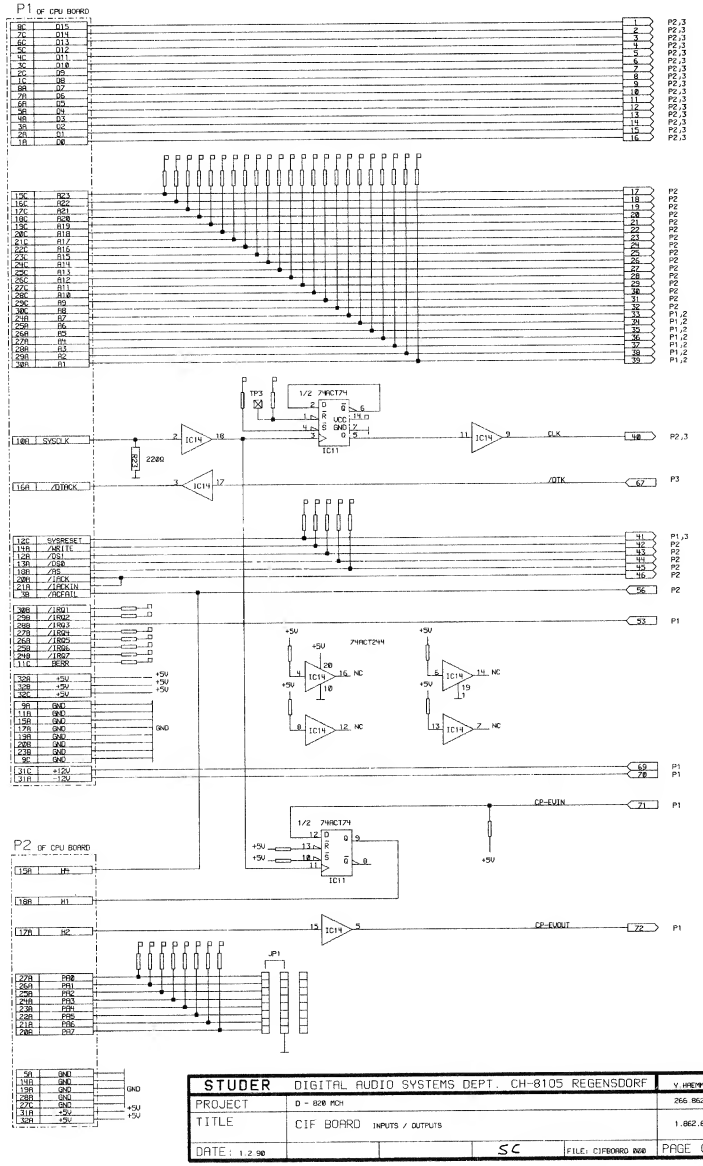

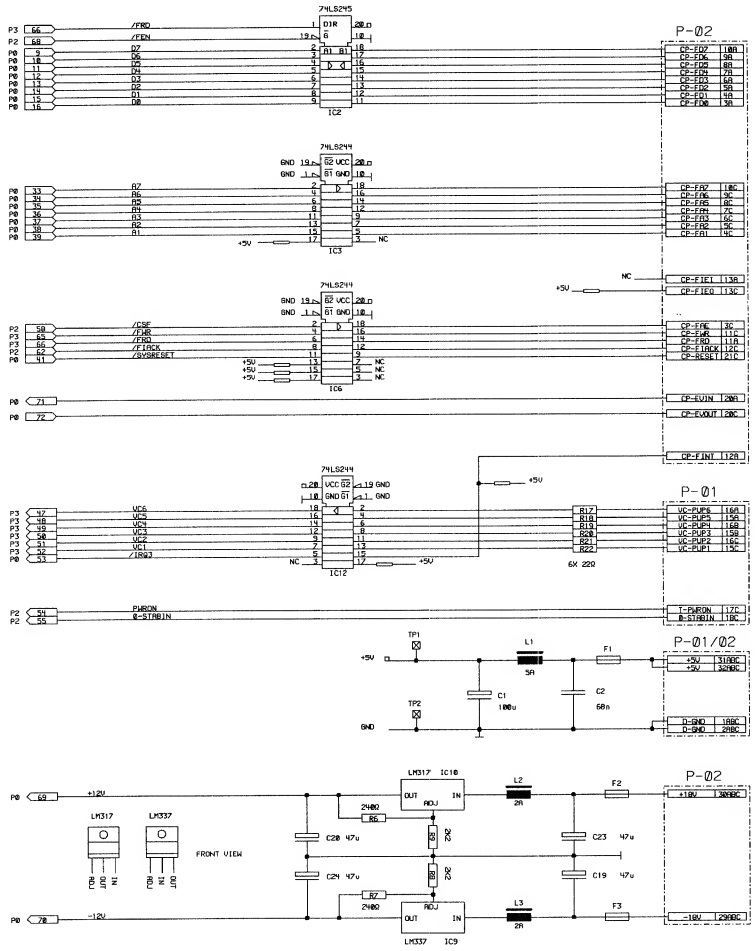

STUDER	DIGITAL AUDIO SYSTEMS DEPT. CH-8105 REGENSDORF			V.HAEMMERLI
PROJECT	D - 820 MCH			266.862
TITLE	CIF BOARD INPUTS / OUTPUTS			1.862.654.20
DATE: 1.2.90		SC	FILE: CIFBOARD.000	PAGE 0 OF 3

STUDER	DIGITAL AUDIO SYSTEMS DEPT. CH-8105 REGENSDORF			V.HAEMMERLI
PROJECT	D - 820 MCH			266.862
TITLE	CIF BOARD INPUTS / OUTPUTS			1.862.654.20
DATE: 24.01.89		SC	FILE: CIFBOARD.001	PAGE 1 OF 3

CPU INTERFACE 1.862.654.20

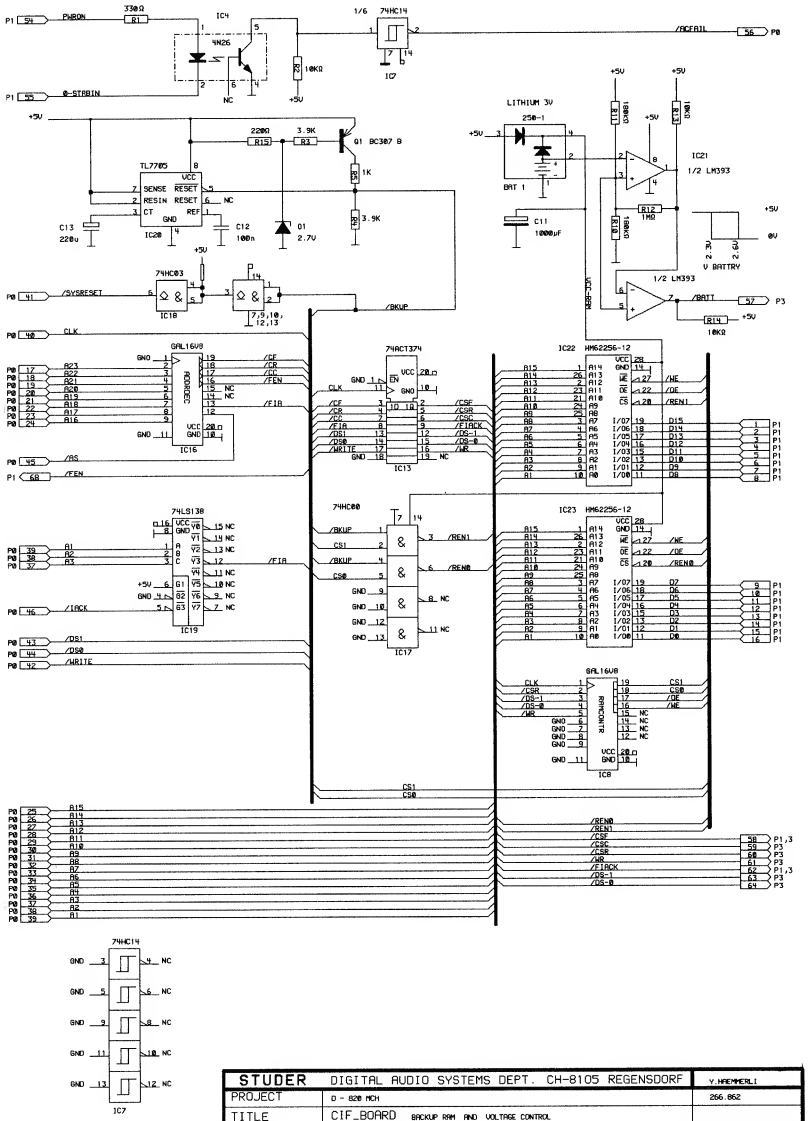

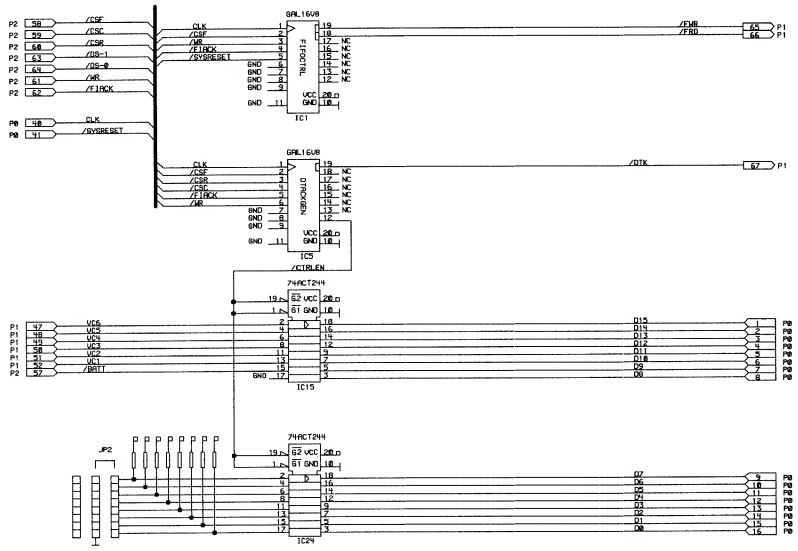

STUDER	DIGITAL AUDIO SYSTEMS DEPT. CH-8105 REGENSDORF			Y.HAEMMERLI
PROJECT	D - 820 MCH			266.862
TITLE	CIF_BOARD BACKUP RAM AND VOLTAGE CONTROL			1.862.654.20
DATE: 24.01.89		SC	FILE: CIFBOARD.002	PAGE 2 OF 3

STUDER	DIGITAL AUDIO SYSTEMS DEPT. CH-8105 REGENSDORF			Y.HAEMMERLI
PROJECT	D - 820 MCH			266.862
TITLE	CIF_BOARD DTRCK GENERATOR AND CONTROL PORT			1.862.654.20
DATE: 24.01.89		SC	FILE: CIFBOARD.003	PAGE 3 OF 3

CPU INTERFACE 1.862.654.20

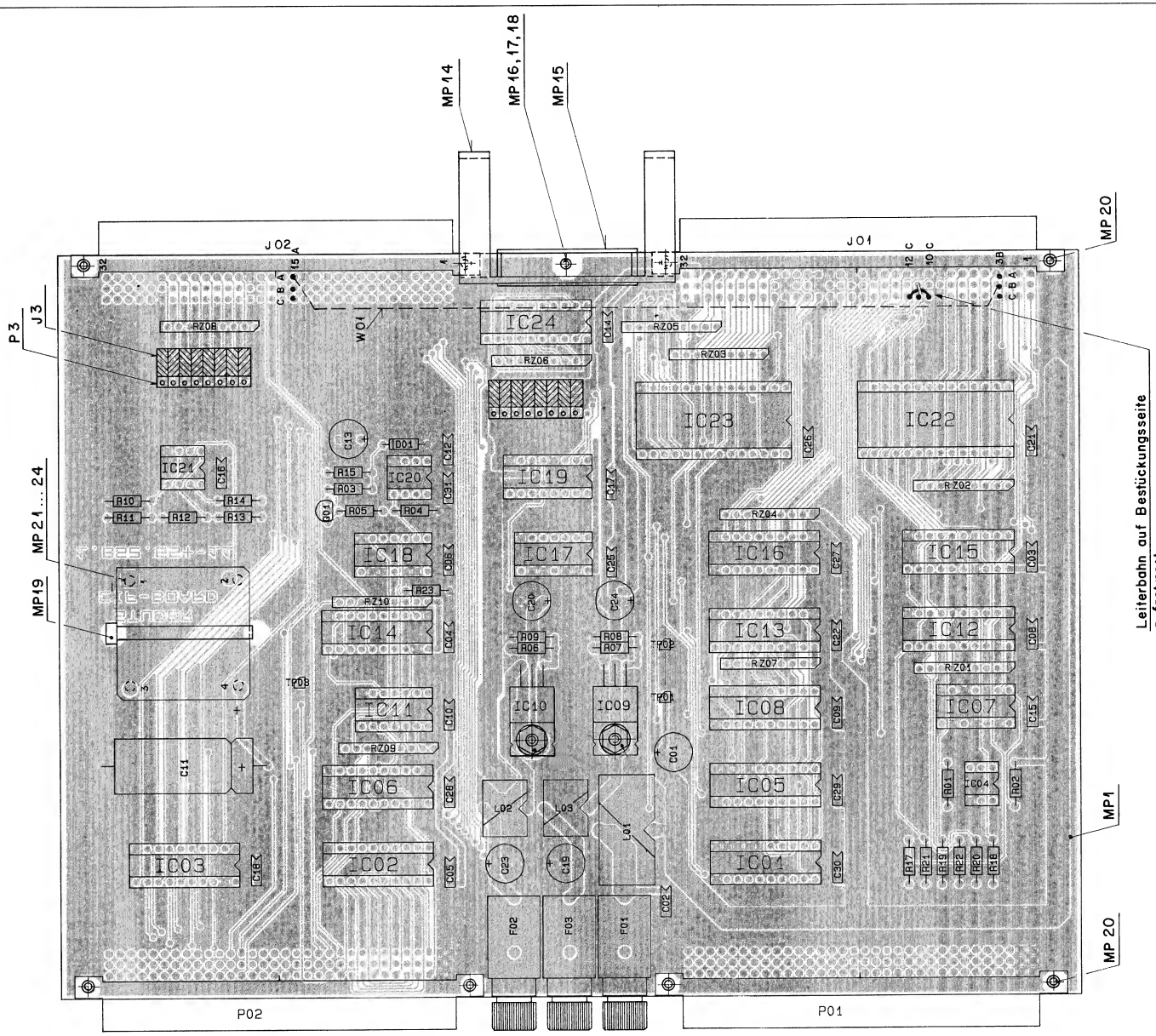

IC-Sockel nach PL bestückt
z.B XIC 08 = Sockel von IC 08.

Schilder MP 2, 3, 4, 5, 6, 7
aufgeklebt nach Fabrikationsmuster.

CPU INTERFACE 1.862.654.20

IND.	POS.NO.	PART NO.	VALUE	SPECIFICATIONS / EQUIVALENT	MANUF.
	BA....1	89.01.2201		BATT. LITH. 2.7V 500 mAh "RENATA"	REN
	C.....1	59.22.3471	470 u	-20%, 10V , EL	ANY
	C.....2	59.06.0683	.068 u	10%, 63V , PETP	ANY
	C.....3	59.06.0683	.068 u	10%, 63V , PETP	ANY
	C.....4	59.06.0683	.068 u	10%, 63V , PETP	ANY
	C.....5	59.06.0683	.068 u	10%, 63V , PETP	ANY
	C.....6	59.06.0683	.068 u	10%, 63V , PETP	ANY
	C.....8	59.06.0683	.068 u	10%, 63V , PETP	ANY
	C.....9	59.06.0683	.068 u	10%, 63V , PETP	ANY
	C....10	59.06.0683	.068 u	10%, 63V , PETP	ANY
	C....11	59.25.3102	1000 u	-20%, 16V , EL	ANY
	C....12	59.06.0104	.1 u	10%, 63V , PETP	ANY
	C....13	59.22.5221	220 u	20%, 25V , EL	ANY
	C....14	59.06.0683	.068 u	10%, 63V , PETP	ANY
	C....15	59.06.0683	.068 u	10%, 63V , PETP	ANY
	C....16	59.06.0683	.068 u	10%, 63V , PETP	ANY
	C....17	59.06.0683	.068 u	10%, 63V , PETP	ANY
	C....18	59.06.0683	.068 u	10%, 63V , PETP	ANY
	C....19	59.22.4470	47 u	-20%, 16V , EL	ANY
	C....20	59.22.4470	47 u	-20%, 16V , EL	ANY
	C....21	59.06.0683	.068 u	10%, 63V , PETP	ANY
	C....22	59.06.0683	.068 u	10%, 63V , PETP	ANY
	C....23	59.22.4470	47 u	-20%, 16V , EL	ANY
	C....24	59.22.4470	47 u	-20%, 16V , EL	ANY
	C....25	59.06.0683	.068 u	10%, 63V , PETP	ANY
	C....26	59.06.0683	.068 u	10%, 63V , PETP	ANY
	C....27	59.06.0683	.068 u	10%, 63V , PETP	ANY
	C....28	59.06.0683	.068 u	10%, 63V , PETP	ANY
	C....29	59.06.0683	.068 u	10%, 63V , PETP	ANY
	C....30	59.06.0683	.068 u	10%, 63V , PETP	ANY
	C....31	59.06.0683	.068 u	10%, 63V , PETP	ANY
	D.....1	50.04.1106		Z 2.7V	ANY
	F.....1	51.01.0122		T3.15A /250V, 5 * 20mm	ANY
	F.....2	51.01.0114		T500mA /250V, 5 * 20mm	ANY

IND.	POS.NO.	PART NO.	VALUE	SPECIFICATIONS / EQUIVALENT	MANUF.
	F.....3	51.01.0114		T500mA /250V, 5 * 20mm	ANY
	IC....1	50.18.0100		16 V 8 - 25 LP (SW 1.862.921.20)	ANY
	IC....2	50.06.0245		74 LS 245	ANY
	IC....3	50.06.0244		74 LS 244	ANY
	IC....4	50.99.0126		4 N 26	ANY
	IC....5	50.18.0100		16 V 8 - 25 LP (SW 1.862.920.20)	ANY
	IC....6	50.06.0244		74 LS 244	ANY
	IC....7	50.17.1014		74 HC 14	ANY
	IC....8	50.18.0100		16 V 8 - 25 LP (SW 1.862.923.20)	ANY
	IC....9	50.10.0105		LM 337 SP TDB 0137 SP	ANY
	IC...10	50.10.0104		LM 317 SP TDB 0017 SP	ANY
	IC...11	50.17.7074		74 ACT 74	ANY
	IC...12	50.06.0244		74 LS 244	ANY
	IC...13	50.17.7374		74 ACT 374	ANY
	IC...14	50.17.7244		74 ACT 244	ANY
	IC...15	50.17.7244		74 ACT 244	ANY
	IC...16	50.18.0100		16 V 8 - 25 LP (SW 1.862.922.20)	ANY
	IC...17	50.17.1000		74 HC 00	ANY
	IC...18	50.17.1003		74 HC 03	ANY
	IC...19	50.06.0138		74 LS 138	ANY
	IC...20	50.11.0122		TL 7702	ANY
	IC...21	50.05.0283		LM 393 TDB 0193 DP	ANY
	IC...22	50.14.1004		HM 62256 LP -12	ANY
	IC...23	50.14.1004		HM 62256 LP -12	ANY
	IC...24	50.17.7244		74 ACT 244	ANY
	J.....1	54.11.2009		EURO 3 * 32	ANY
	J.....2	54.11.2009		EURO 3 * 32	ANY
	J.....3	54.01.0021		JUMPER 2 * 0.63 *** QTY16 *********	ANY
	L.....1	62.03.0030	110 uH	3 A, FILTER	ANY
	L.....2	62.03.0010	48 uH	2 A, FILTER	ANY
	L.....3	62.03.0010	48 uH	2 A, FILTER	ANY
	MP....1	1.862.654.11		CIF-BOARD PCB	ANY
	MP....2	1.862.654.01		ETIKETTE	ANY

IND.	POS.NO.	PART NO.	VALUE	SPECIFICATIONS / EQUIVALENT	MANUF.
	MP...3	1.101.001.20		TEXT-ETIK. 5x20 HARDWARE -20	ANY
	MP...4	43.01.0108		ESE-WARNSCHILD	ANY
	MP...5	1.010.120.51		TEXT-ETIK.: T3.15A (5x20)	ANY
	MP...6	1.010.112.51		TEXT-ETIK.: T500mA (5x20)	ANY
	MP...7	1.010.112.51		TEXT-ETIK.: T500mA (5x20)	ANY
	MP...8	24.16.1030		RIPPENSCHEIBE D 3.2/3.5	ANY
	MP...9	24.16.1030		RIPPENSCHEIBE D 3.2/3.5	ANY
	MP...10	22.01.8030		6KT-MUTTER 0.8 D , M 3	ANY
	MP...11	22.01.8030		6KT-MUTTER 0.8 D , M 3	ANY
	MP...12	21.13.0354		Z - SCHR. A2/A2 M 3 * 6	ANY
	MP...13	21.13.0354		Z - SCHR. A2/A2 M 3 * 6	ANY
	MP...14	1.862.654.02		HALTEBUEGEL	ST
	MP...15	1.862.654.03		ISOLIERSTREIFEN	ST
	MP...16	21.53.0200		Z - SCHR. I5 M 2.5 * 8	ANY
	MP...17	24.16.1025		RIPPENSCHEIBE D 2.7/ 5	ANY
	MP...18	23.01.1027		U-SCHEIBE D 2.7/ 5 * 0.5	ANY
	MP...19	35.03.0113		BEFESTIGUNGSELEMTN 2.4 * 140	ANY
	MP...20	28.99.0119		RUHRKETTE* QTY 8 ***** D 2.5*0.15* 10	ANY
	MP...21	54.02.0431		STECKOESE F. BATT.	ANY
	MP...22	54.02.0431		STECKOESE F. BATT.	ANY
	MP...23	54.02.0431		STECKOESE F. BATT.	ANY
	MP...24	54.02.0431		STECKOESE F. BATT.	ANY
	P.....1	54.01.0358		EUROCARD 3 * 32 CONNECTOR	ANY
	P.....2	54.01.0358		EUROCARD 3 * 32 CONNECTOR	ANY
	P.....3	54.01.0020		STIFTLEISTE *** QTY48 **********	ANY
	Q.....1	50.03.0515		BC 307	ANY
	R.....1	57.11.3331	330	1%	ANY
	R.....2	57.11.3103	10 k	1%	ANY
	R.....3	57.11.3392	3.9 k	1%	ANY
	R.....4	57.11.3392	3.9 k	1%	ANY
	R.....5	57.11.3102	1 k	1%	ANY
	R.....6	57.11.3241	240	1%	ANY
	R.....7	57.11.3241	240	1%	ANY
	R.....8	57.11.3222	2.2 k	1%	ANY

IND.	POS.NO.	PART NO.	VALUE	SPECIFICATIONS / EQUIVALENT	MANUF.
	R.....9	57.11.3222	2.2 k	1%	ANY
	R....10	57.11.3184	180 k	1%	ANY
	R....11	57.11.3184	180 k	1%	ANY
	R....12	57.11.3105	1 M	1%	ANY
	R....13	57.11.3103	10 k	1%	ANY
	R....14	57.11.3103	10 k	1%	ANY
	R....15	57.11.3221	220	1%	ANY
	R....17	57.11.3220	22	1%	ANY
	R....18	57.11.3220	22	1%	ANY
	R....19	57.11.3220	22	1%	ANY
	R....20	57.11.3220	22	1%	ANY
	R....21	57.11.3220	22	1%	ANY
	R....22	57.11.3220	22	1%	ANY
	R....23	57.11.3221	220	1%	ANY
	RZ....1	57.88.4332		8 * 3.3 k	ANY
	RZ....2	57.88.4332		8 * 3.3 k	ANY
	RZ....3	57.88.4332		8 * 3.3 k	ANY
	RZ....4	57.88.4332		8 * 3.3 k	ANY
	RZ....5	57.88.4332		8 * 3.3 k	ANY
	RZ....6	57.88.4332		8 * 3.3 k	ANY
	RZ....7	57.88.4332		8 * 3.3 k	ANY
	RZ....8	57.88.4332		8 * 3.3 k	ANY
	RZ....9	57.88.4332		8 * 3.3 k	ANY
	RZ...10	57.88.4332		8 * 3.3 k	ANY
	TP....1	54.02.0320		TESTPOINT 2.8 * 0.8	ANY
	TP....2	54.02.0320		TESTPOINT 2.8 * 0.8	ANY
	TP....3	54.02.0320		TESTPOINT 2.8 * 0.8	ANY
(01)	W.....1	1.010.122.64	220 mm	von P12 Pin 3B nach P13 Pin 15A	St
	XF....1	53.03.0118	5 * 20	FUSE-HOLDER	ANY
	XF....2	53.03.0118	5 * 20	FUSE-HOLDER	ANY
	XF....3	53.03.0118	5 * 20	FUSE-HOLDER	ANY
	XIC...1	53.03.0165		DIL 20-POL	ANY

IND.	POS.NO.	PART NO.	VALUE	SPECIFICATIONS / EQUIVALENT	MANUF.
	XIC...5	53.03.0165		DIL 20-POL	ANY
	XIC...8	53.03.0165		DIL 20-POL	ANY
	XIC..16	53.03.0165		DIL 20-POL	ANY
	XIC..22	53.03.0173		DIL 28-POL	ANY
	XIC..23	53.03.0173		DIL 28-POL	ANY

REMARKS: SERIVERSION
****
01: W01 WRAP-DRAHT

MANUFACTURERS:
ST = STUDER PH = PHILIPS REN = RENATA

ABBREVIATIONS:
CER = CERAMIC / FILM = FILM TYPE / XF = CLAMP FOR FUSES /
XIC = IC SOCKET

ORIG 89/11/13 (01) 90/03/09

BLOCK DIAGRAM CPU 1.862.655.22

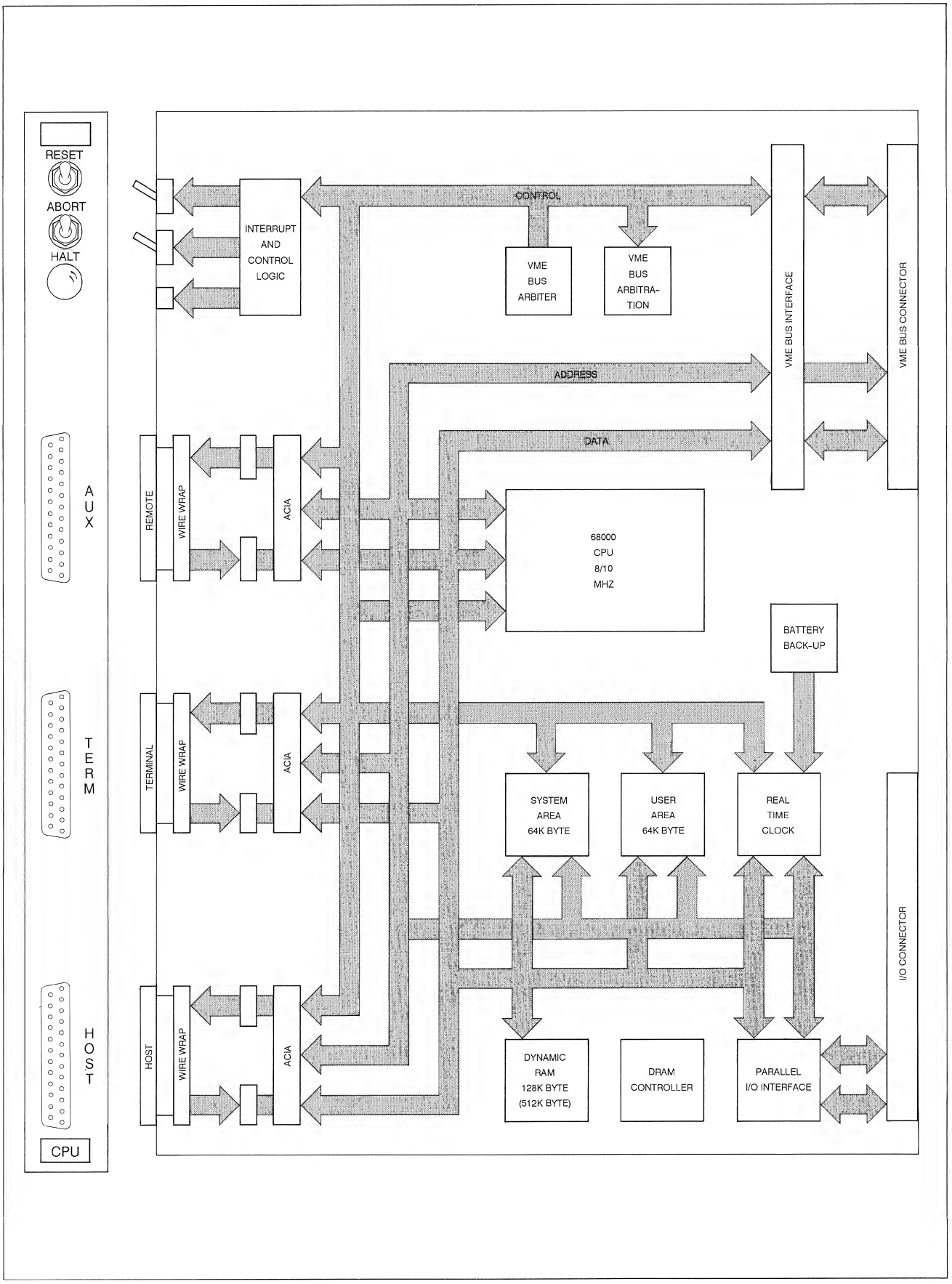

BLOCK DIAGRAM PERIPHERAL INTERFACE

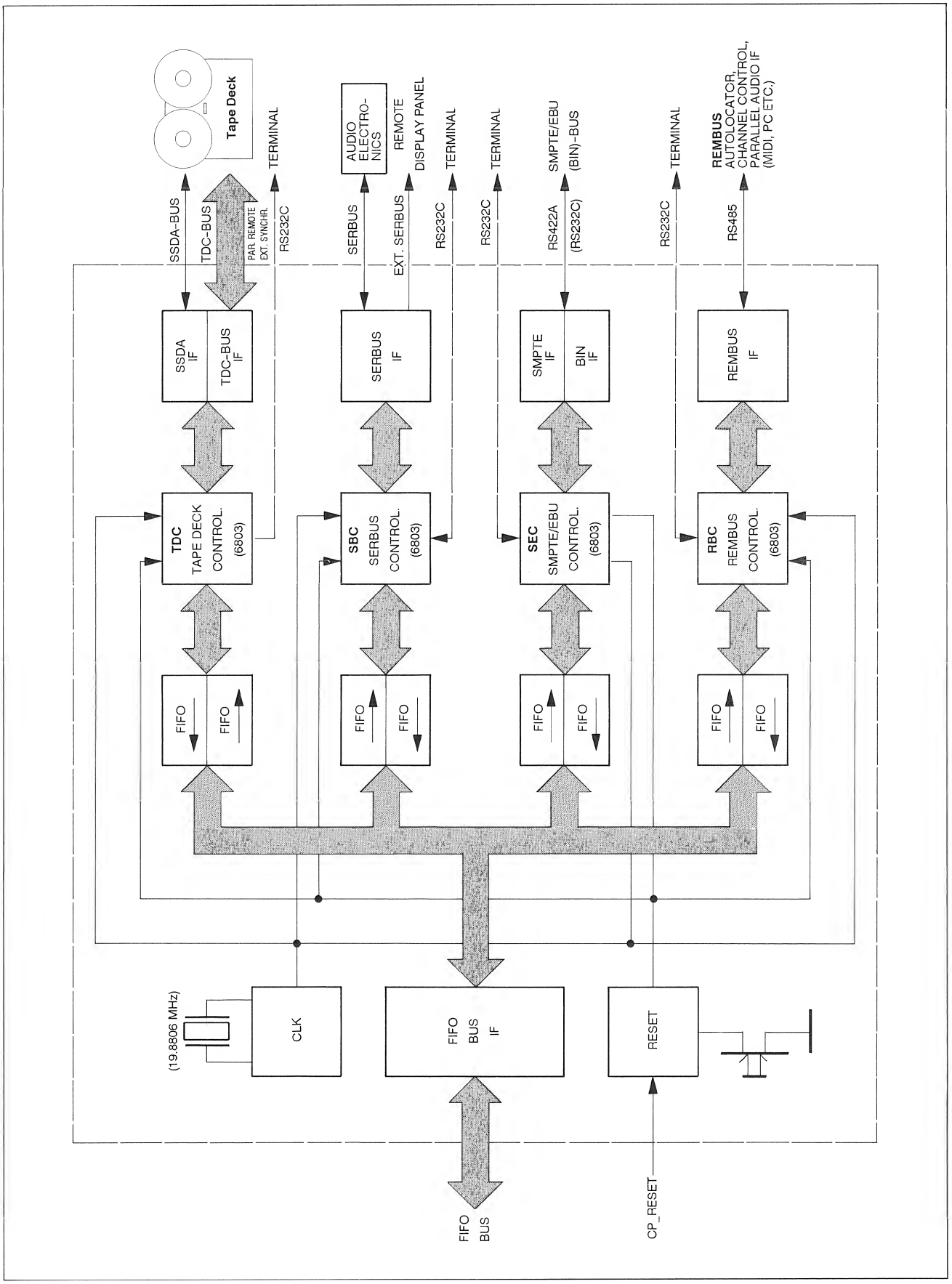

PERIPHERAL INTERFACE 1.862.656.21

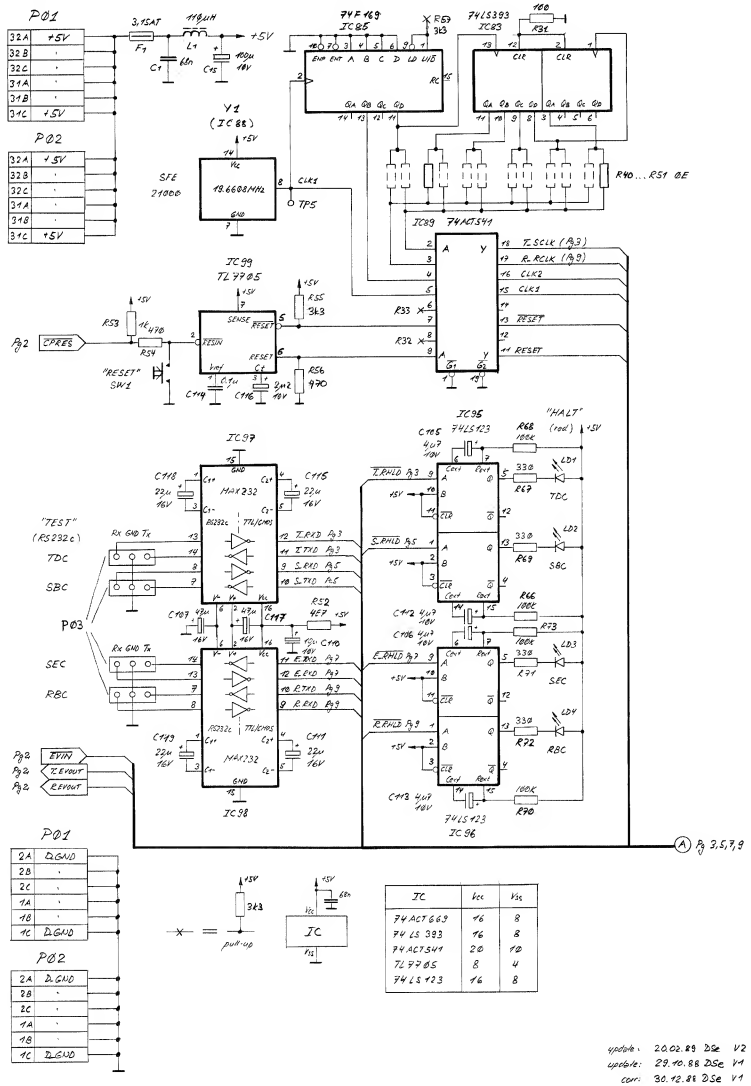

IC	Vcc	Vss
74 ACT 669	16	8
74 LS 393	16	8
74 ACT 541	20	10
TL 7705	8	4
74 LS 123	16	8

update: 20.02.89 DSe V2
update: 29.10.88 DSe V1
corr: 30.12.88 DSe V1

09.08.88 DSe			
D820MCH PIF		PAGE 1 OF 10	
STUDER	CLOCK AND TEST CIRCUITS	SC	1.862.656.21

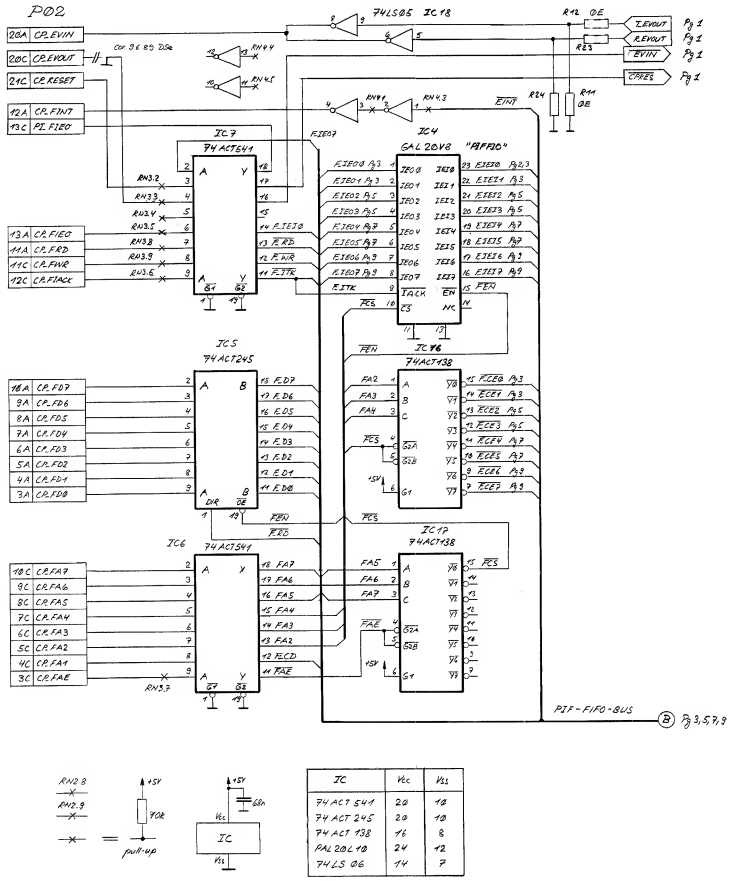

IC	Vcc	Vss
74 ACT 541	20	10
74 ACT 245	20	10
74 ACT 138	16	8
PAL 20L10	24	12
74 LS 06	14	7

update: 20.02.89 DSe V2
update: 29.10.88 DSe V1
corr: 30.12.88 DSe V1

08.08.88 DSe			
D820MCH PIF		PAGE 2 OF 10	
STUDER	FIFO-BUS INTERFACE	SC	1.862.656.21

PERIPHERAL INTERFACE 1.862.656.21

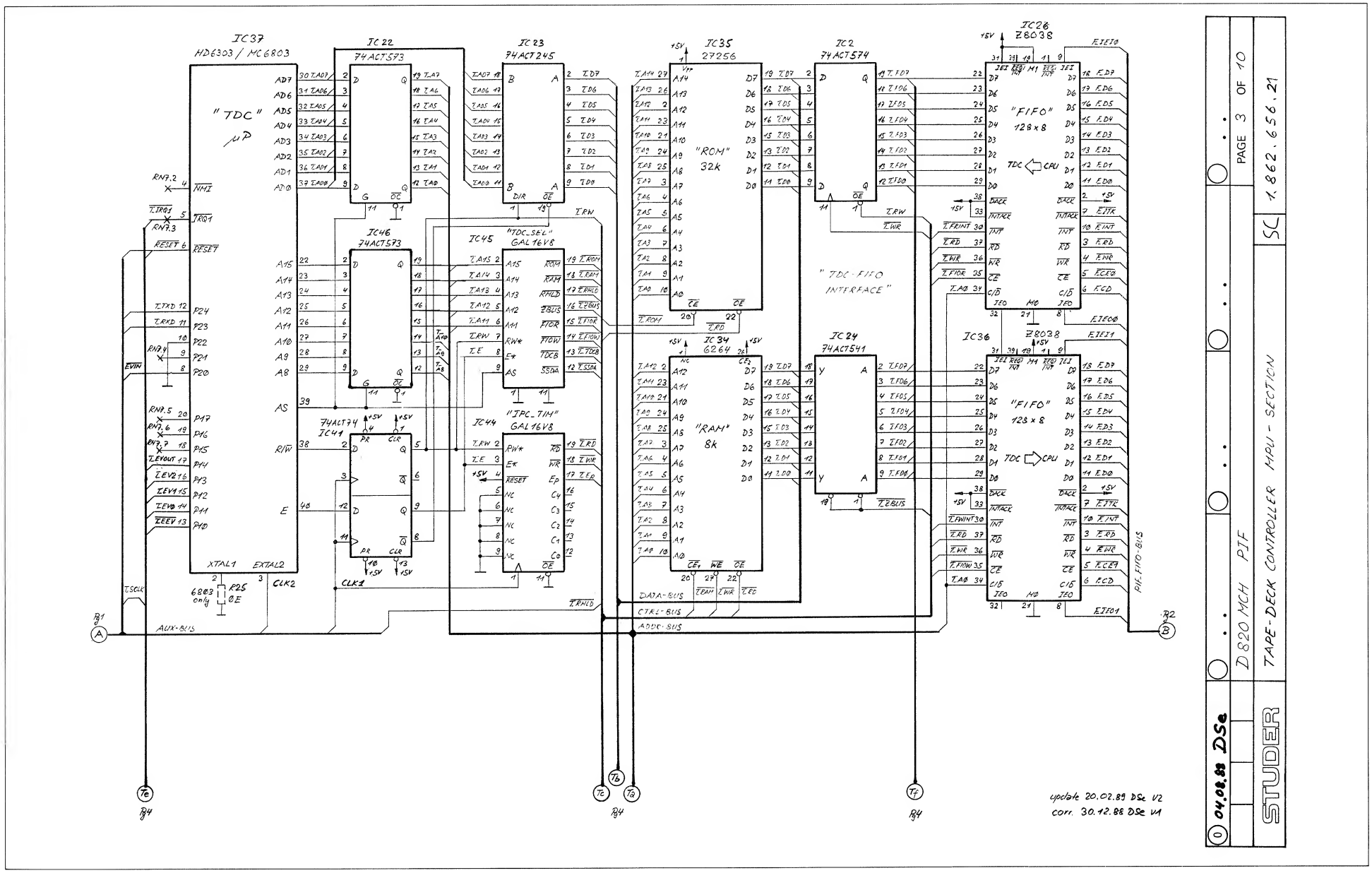

PERIPHERAL INTERFACE 1.862.656.21

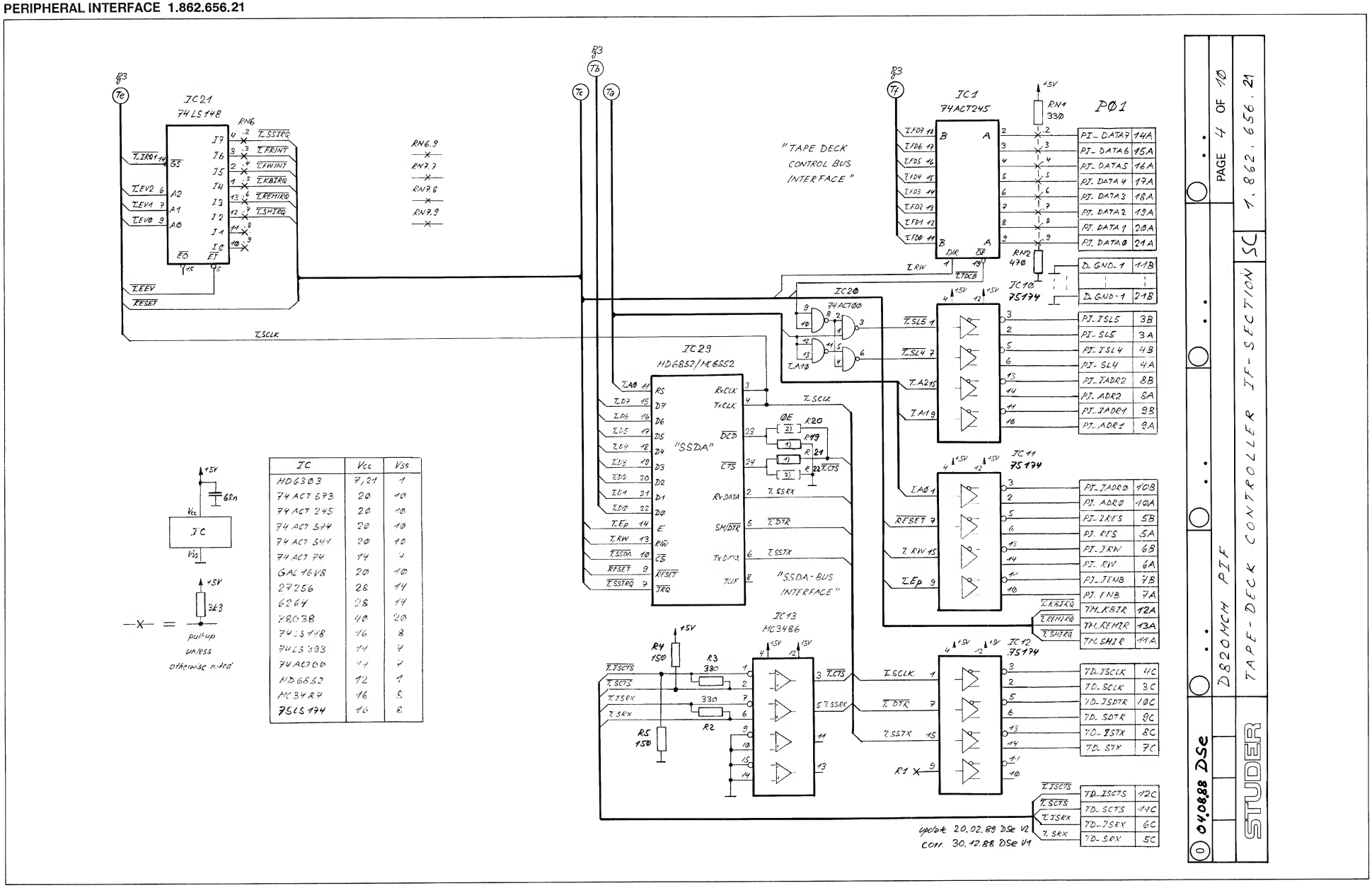

IC	Vcc	Vss
HD6303	7,21	1
74ACT573	20	10
74ACT245	20	10
74ACT574	20	10
74ACT541	20	10
74ACT74	14	7
GAL16V8	20	10
27256	28	14
6264	28	14
X8038	40	20
74LS148	16	8
74LS393	14	7
74ACT00	14	7
HD6852	12	1
MC3487	16	8
75LS174	16	8

PERIPHERAL INTERFACE 1.862.656.21

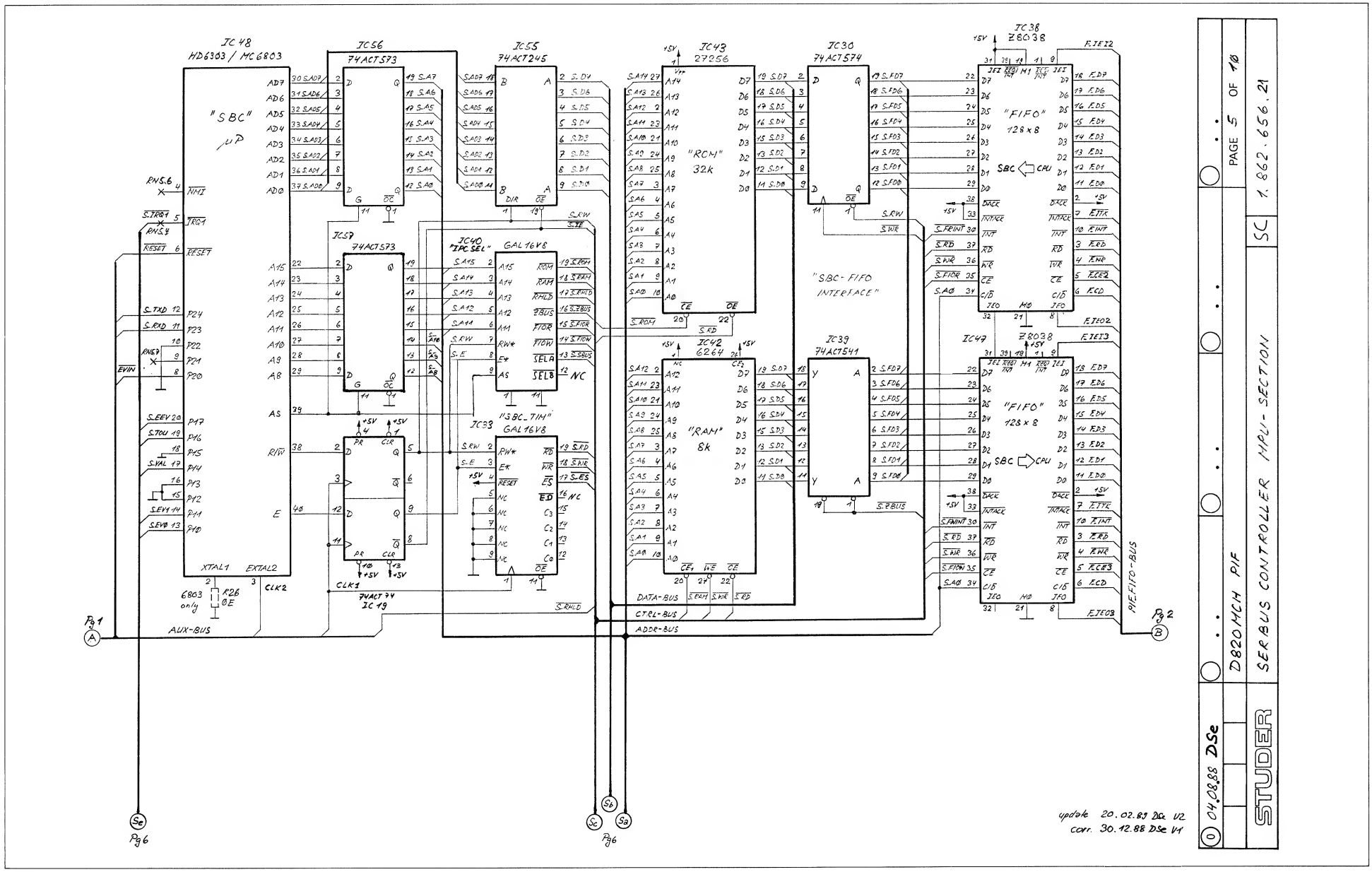

PERIPHERAL INTERFACE 1.862.656.21

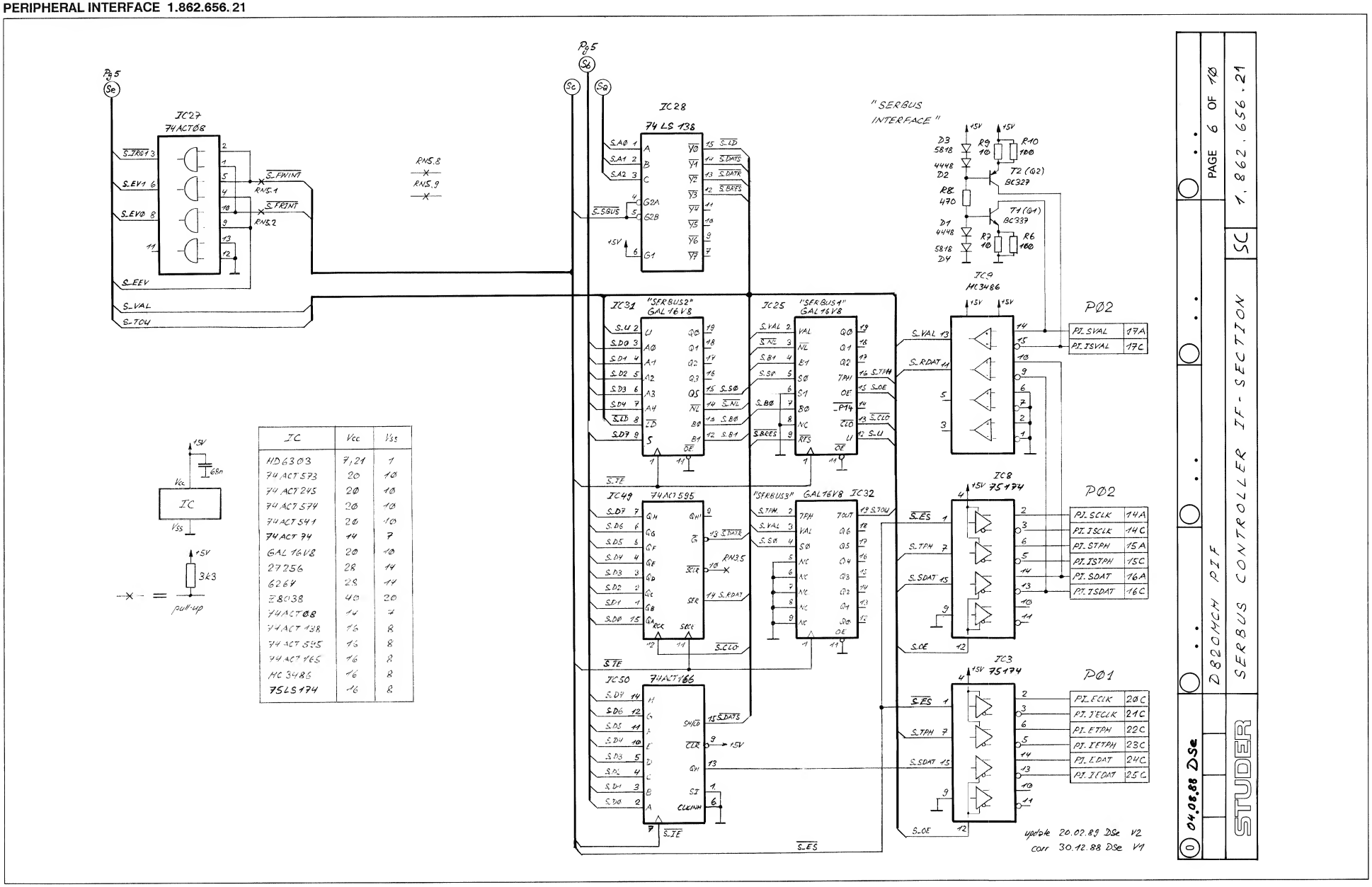

IC	Vcc	Vss
HD63003	7,21	1
74ACT573	20	10
74ACT245	20	10
74ACT574	20	10
74ACT541	20	10
74ACT74	14	7
GAL16V8	20	10
27256	28	14
6264	28	14
Z80138	40	20
74ACT08	14	7
74ACT138	16	8
74ACT545	16	8
74ACT165	16	8
MC3486	16	8
75LS174	16	8

PERIPHERAL INTERFACE 1.862.656.21

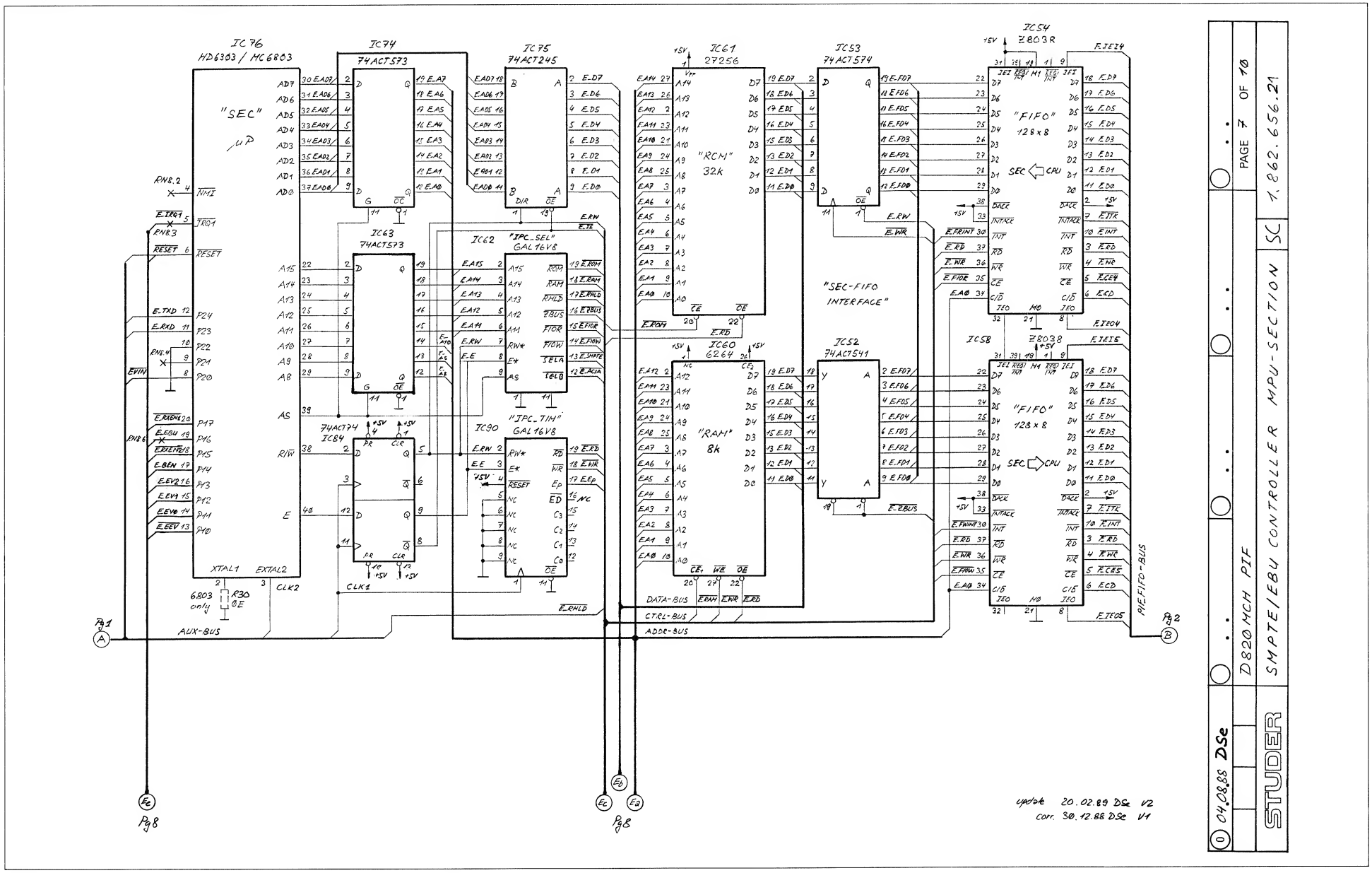

PERIPHERAL INTERFACE 1.862.656.21

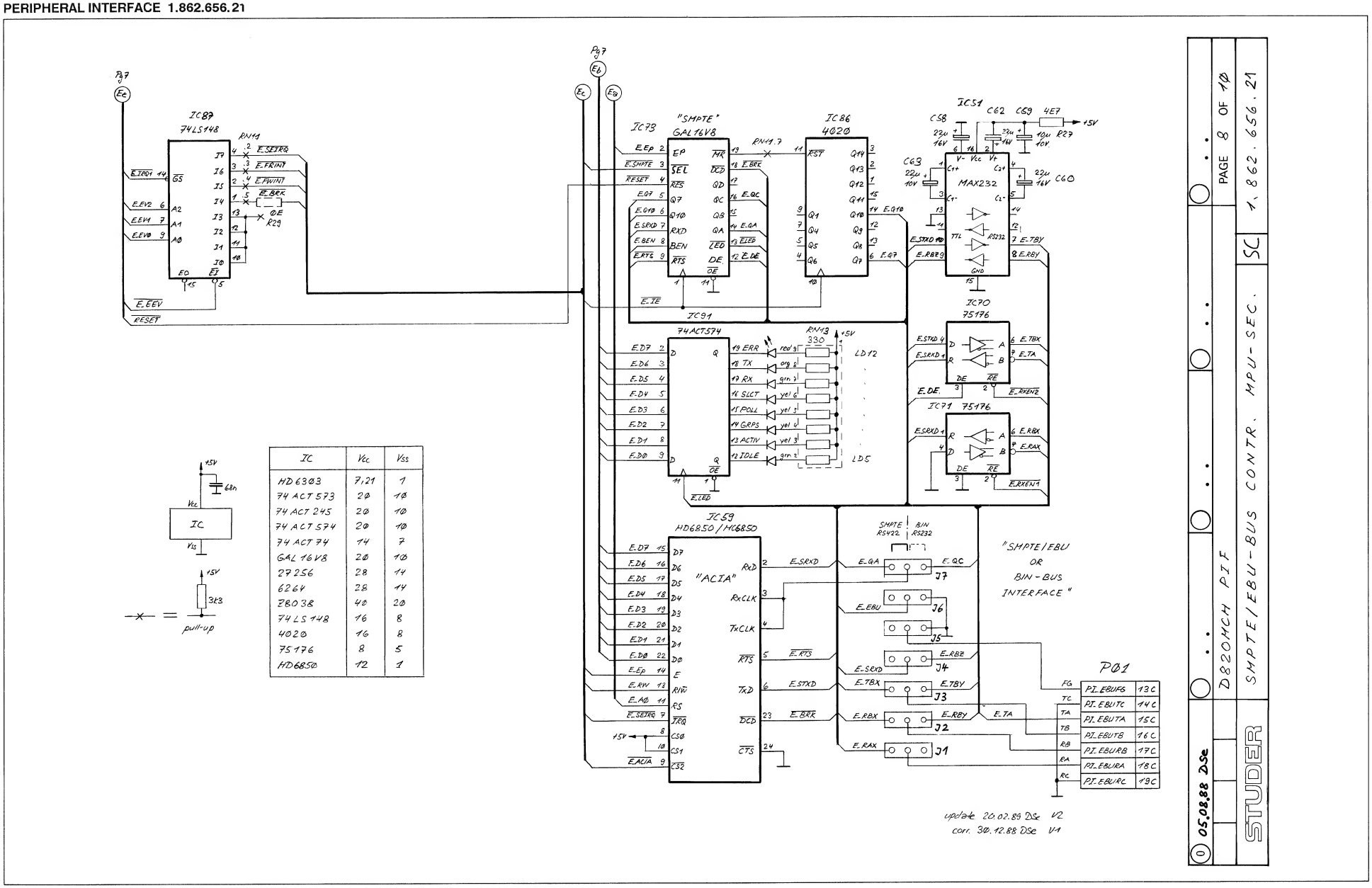

IC	Vcc	Vss
HD6303	7,21	1
74 ACT 573	20	10
74 ACT 245	20	10
74 ACT 574	20	10
74 ACT 74	14	7
GAL 16V8	20	10
27256	28	14
6264	28	14
Z8038	40	20
74LS148	16	8
4020	16	8
75176	8	5
HD6850	12	1

PERIPHERAL INTERFACE 1.862.656.21

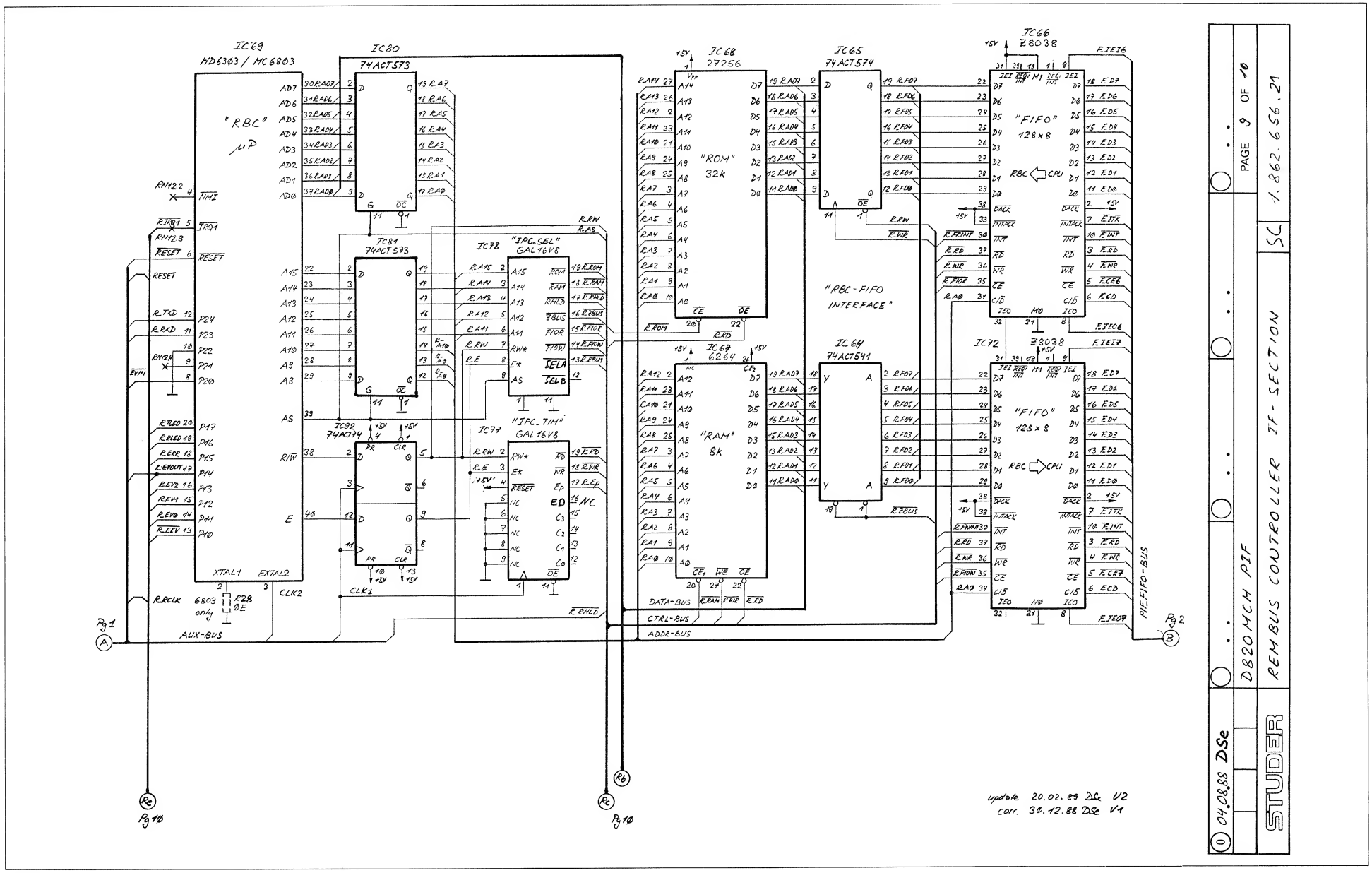

PERIPHERAL INTERFACE 1.862.656.21

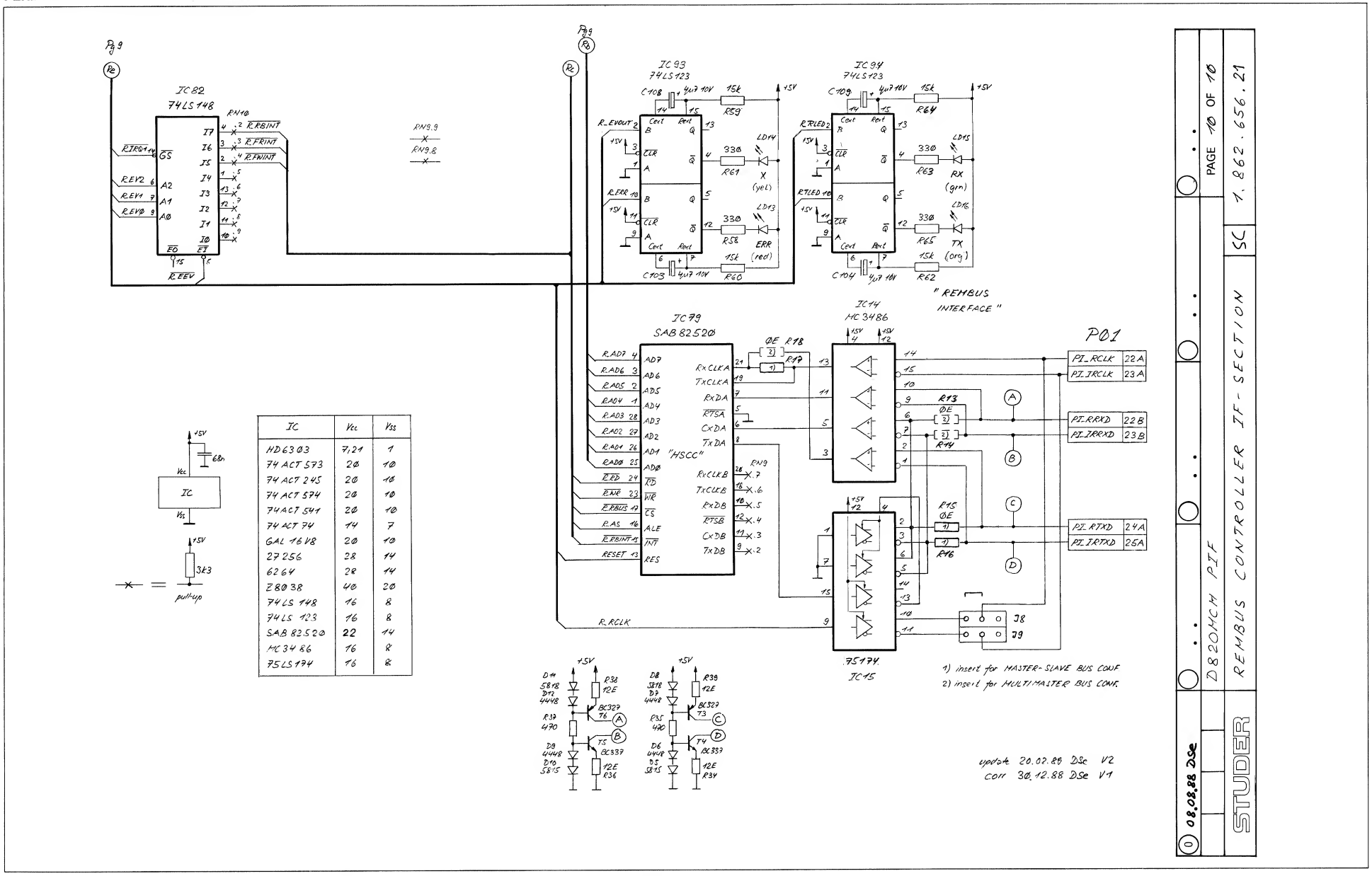

IC	Vcc	Vss
HD 63 03	7,21	1
74 ACT 573	20	10
74 ACT 245	20	10
74 ACT 574	20	10
74 ACT 541	20	10
74 ACT 74	14	7
GAL 16 V8	20	10
27 256	28	14
62 64	28	14
Z 80 38	40	20
74 LS 148	16	8
74 LS 123	16	8
SAB 82 520	22	14
HC 34 86	16	8
75 LS 174	16	8

PERIPHERAL INTERFACE 1.862.656.21

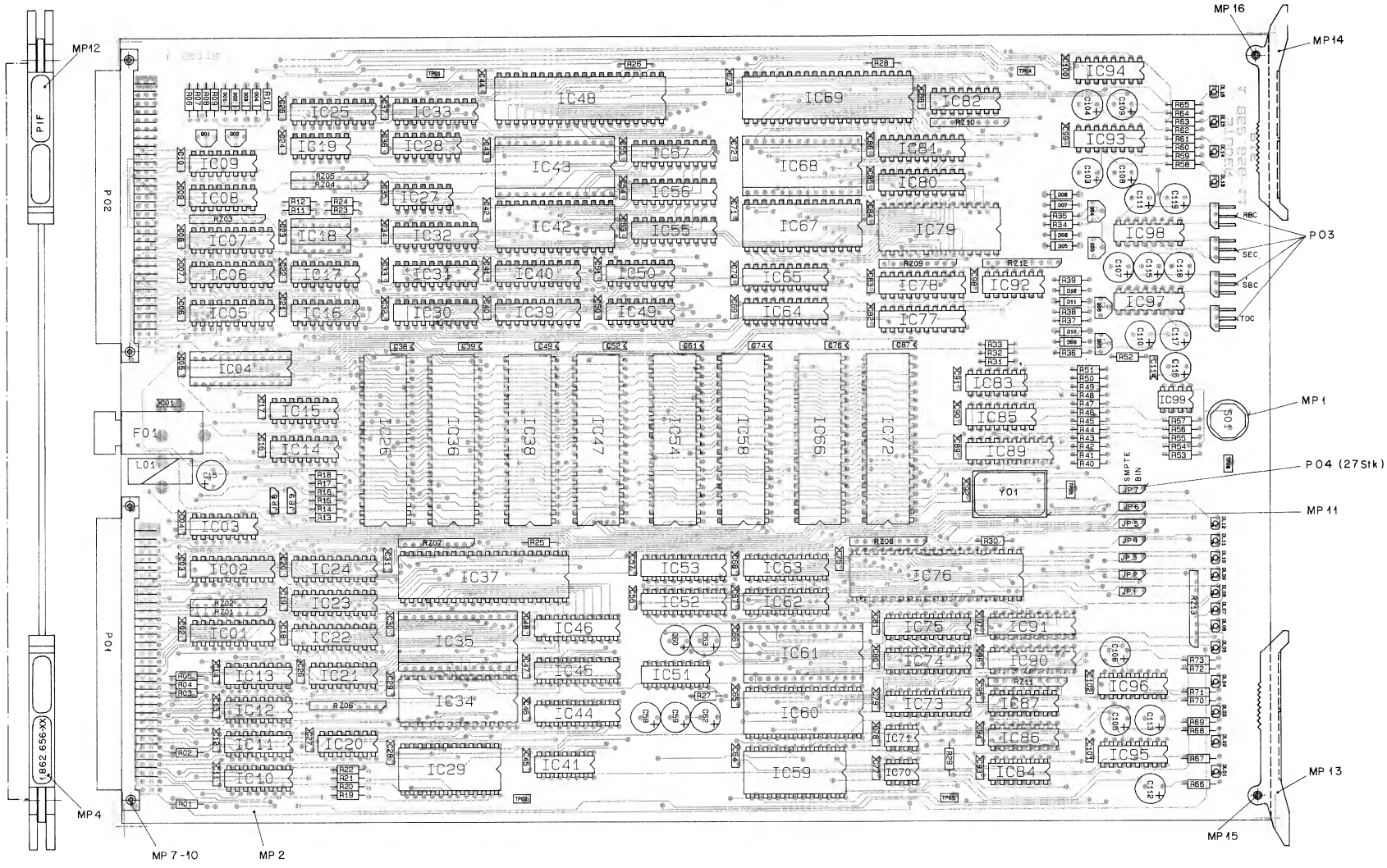

Schilder MP 3,4,5,6 und 12
aufgeklebt nach Fabrikationsmuster

IC Sockel nach PL bestückt.
zB. XIC 5 = Sockel von IC 5

PERIPHERAL INTERFACE 1.862.656.21

IND.	POS.NO.	PART NO.	VALUE	SPECIFICATIONS / EQUIVALENT	MANUF.
	C.....1	59.06.0683	.068 u	10%, 63V , PETP	ANY
	C.....2	59.06.0683	.068 u	10%, 63V , PETP	ANY
	C.....3	59.06.0683	.068 u	10%, 63V , PETP	ANY
	C.....4	59.06.0683	.068 u	10%, 63V , PETP	ANY
	C.....5	59.06.0683	.068 u	10%, 63V , PETP	ANY
	C.....6	59.06.0683	.068 u	10%, 63V , PETP	ANY
	C.....7	59.06.0683	.068 u	10%, 63V , PETP	ANY
	C.....8	59.06.0683	.068 u	10%, 63V , PETP	ANY
	C.....9	59.06.0683	.068 u	10%, 63V , PETP	ANY
	C....10	59.06.0683	.068 u	10%, 63V , PETP	ANY
	C....11	59.06.0683	.068 u	10%, 63V , PETP	ANY
	C....12	59.06.0683	.068 u	10%, 63V , PETP	ANY
	C....13	59.06.0683	.068 u	10%, 63V , PETP	ANY
	C....14	59.06.0683	.068 u	10%, 63V , PETP	ANY
	C....15	59.22.3471	470 u	-20%, 10V , EL	ANY
	C....16	59.06.0683	.068 u	10%, 63V , PETP	ANY
	C....17	59.06.0683	.068 u	10%, 63V , PETP	ANY
	C....18	59.06.0683	.068 u	10%, 63V , PETP	ANY
	C....19	59.06.0683	.068 u	10%, 63V , PETP	ANY
	C....20	59.06.0683	.068 u	10%, 63V , PETP	ANY
	C....21	59.06.0683	.068 u	10%, 63V , PETP	ANY
	C....22	59.06.0683	.068 u	10%, 63V , PETP	ANY
	C....23	59.06.0683	.068 u	10%, 63V , PETP	ANY
	C....24	59.06.0683	.068 u	10%, 63V , PETP	ANY
	C....25	59.06.0683	.068 u	10%, 63V , PETP	ANY
	C....26	59.06.0683	.068 u	10%, 63V , PETP	ANY
	C....27	59.06.0683	.068 u	10%, 63V , PETP	ANY
	C....28	59.06.0683	.068 u	10%, 63V , PETP	ANY
	C....29	59.06.0683	.068 u	10%, 63V , PETP	ANY
	C....30	59.06.0683	.068 u	10%, 63V , PETP	ANY
	C....31	59.06.0683	.068 u	10%, 63V , PETP	ANY
	C....32	59.06.0683	.068 u	10%, 63V , PETP	ANY
	C....33	59.06.0683	.068 u	10%, 63V , PETP	ANY
	C....34	59.06.0683	.068 u	10%, 63V , PETP	ANY
	C....35	59.06.0683	.068 u	10%, 63V , PETP	ANY
	C....36	59.06.0683	.068 u	10%, 63V , PETP	ANY
	C....37	59.06.0683	.068 u	10%, 63V , PETP	ANY

STUDER (00) 91/14/02 LAR PIF-BOARD PL 1.862.656.21 PAGE 1

IND.	POS.NO.	PART NO.	VALUE	SPECIFICATIONS / EQUIVALENT	MANUF.
	C....38	59.06.0683	.068 u	10%, 63V , PETP	ANY
	C....39	59.06.0683	.068 u	10%, 63V , PETP	ANY
	C....40	59.06.0683	.068 u	10%, 63V , PETP	ANY
	C....41	59.06.0683	.068 u	10%, 63V , PETP	ANY
	C....42	59.06.0683	.068 u	10%, 63V , PETP	ANY
	C....43	59.06.0683	.068 u	10%, 63V , PETP	ANY
	C....44	59.06.0683	.068 u	10%, 63V , PETP	ANY
	C....45	59.06.0683	.068 u	10%, 63V , PETP	ANY
	C....46	59.06.0683	.068 u	10%, 63V , PETP	ANY
	C....47	59.06.0683	.068 u	10%, 63V , PETP	ANY
	C....48	59.06.0683	.068 u	10%, 63V , PETP	ANY
	C....49	59.06.0683	.068 u	10%, 63V , PETP	ANY
	C....50	59.06.0683	.068 u	10%, 63V , PETP	ANY
	C....51	59.06.0683	.068 u	10%, 63V , PETP	ANY
	C....52	59.06.0683	.068 u	10%, 63V , PETP	ANY
	C....53	59.06.0683	.068 u	10%, 63V , PETP	ANY
	C....54	59.06.0683	.068 u	10%, 63V , PETP	ANY
	C....55	59.06.0683	.068 u	10%, 63V , PETP	ANY
	C....56	59.06.0683	.068 u	10%, 63V , PETP	ANY
	C....57	59.06.0683	.068 u	10%, 63V , PETP	ANY
	C....58	59.22.5220	22 u	-20%, 25V , EL	ANY
	C....59	59.22.6100	10 u	-20%, 35V , EL	ANY
	C....60	59.22.5220	22 u	-20%, 25V , EL	ANY
	C....61	59.06.0683	.068 u	10%, 63V , PETP	ANY
	C....62	59.22.5220	22 u	-20%, 25V , EL	ANY
	C....63	59.22.5220	22 u	-20%, 25V , EL	ANY
	C....64	59.06.0683	.068 u	10%, 63V , PETP	ANY
	C....65	59.06.0683	.068 u	10%, 63V , PETP	ANY
	C....66	59.06.0683	.068 u	10%, 63V , PETP	ANY
	C....67	59.06.0683	.068 u	10%, 63V , PETP	ANY
	C....68	59.06.0683	.068 u	10%, 63V , PETP	ANY
	C....69	59.06.0683	.068 u	10%, 63V , PETP	ANY
	C....70	59.06.0683	.068 u	10%, 63V , PETP	ANY
	C....71	59.06.0683	.068 u	10%, 63V , PETP	ANY
	C....72	59.06.0683	.068 u	10%, 63V , PETP	ANY
	C....73	59.06.0683	.068 u	10%, 63V , PETP	ANY
	C....74	59.06.0683	.068 u	10%, 63V , PETP	ANY

STUDER (00) 91/14/02 LAR PIF-BOARD PL 1.862.656.21 PAGE 2

IND.	POS.NO.	PART NO.	VALUE	SPECIFICATIONS / EQUIVALENT	MANUF.
	C....75	59.06.0683	.068 u	10%, 63V , PETP	ANY
	C....76	59.06.0683	.068 u	10%, 63V , PETP	ANY
	C....77	59.06.0683	.068 u	10%, 63V , PETP	ANY
	C....78	59.06.0683	.068 u	10%, 63V , PETP	ANY
	C....79	59.06.0683	.068 u	10%, 63V , PETP	ANY
	C....80	59.06.0683	.068 u	10%, 63V , PETP	ANY
	C....81	59.06.0683	.068 u	10%, 63V , PETP	ANY
	C....82	59.06.0683	.068 u	10%, 63V , PETP	ANY
	C....83	59.06.0683	.068 u	10%, 63V , PETP	ANY
	C....84	59.06.0683	.068 u	10%, 63V , PETP	ANY
	C....85	59.06.0683	.068 u	10%, 63V , PETP	ANY
	C....86	59.06.0683	.068 u	10%, 63V , PETP	ANY
	C....87	59.06.0683	.068 u	10%, 63V , PETP	ANY
	C....88	59.06.0683	.068 u	10%, 63V , PETP	ANY
	C....89	59.06.0683	.068 u	10%, 63V , PETP	ANY
	C....90	59.06.0683	.068 u	10%, 63V , PETP	ANY
	C....91	59.06.0683	.068 u	10%, 63V , PETP	ANY
	C....92	59.06.0683	.068 u	10%, 63V , PETP	ANY
	C....93	59.06.0683	.068 u	10%, 63V , PETP	ANY
	C....94	59.06.0683	.068 u	10%, 63V , PETP	ANY
	C....95	59.06.0683	.068 u	10%, 63V , PETP	ANY
	C....96	59.06.0683	.068 u	10%, 63V , PETP	ANY
	C....97	59.06.0683	.068 u	10%, 63V , PETP	ANY
	C....98	59.06.0683	.068 u	10%, 63V , PETP	ANY
	C....99	59.06.0683	.068 u	10%, 63V , PETP	ANY
	C...100	59.06.0683	.068 u	10%, 63V , PETP	ANY
	C...101	59.06.0683	.068 u	10%, 63V , PETP	ANY
	C...102	59.06.0683	.068 u	10%, 63V , PETP	ANY
	C...103	59.22.8479	4.7 u	-20%, 63V , EL	ANY
	C...104	59.22.8479	4.7 u	-20%, 63V , EL	ANY
	C...105	59.22.8479	4.7 u	-20%, 63V , EL	ANY
	C...106	59.22.8479	4.7 u	-20%, 63V , EL	ANY
	C...107	59.22.5470	47 u	-20%, 25V , EL	ANY
	C...108	59.22.8479	4.7 u	-20%, 63V , EL	ANY
	C...109	59.22.8479	4.7 u	-20%, 63V , EL	ANY
	C...110	59.22.6100	10 u	-20%, 35V , EL	ANY
	C...111	59.22.5220	22 u	-20%, 25V , EL	ANY

STUDER (00) 91/14/02 LAR PIF-BOARD PL 1.862.656.21 PAGE 3

IND.	POS.NO.	PART NO.	VALUE	SPECIFICATIONS / EQUIVALENT	MANUF.
	C...112	59.22.8479	4.7 u	-20%, 63V , EL	ANY
	C...113	59.22.8479	4.7 u	-20%, 63V , EL	ANY
	C...114	59.06.0104	.1 u	10%, 63V , PETP	ANY
	C...115	59.22.5220	22 u	-20%, 25V , EL	ANY
	C...116	59.22.8229	2.2 u	-20%, 50V , EL	ANY
	C...117	59.22.5470	47 u	-20%, 25V , EL	ANY
	C...118	59.22.5220	22 u	-20%, 25V , EL	ANY
	C...119	59.22.5220	22 u	-20%, 25V , EL	ANY
	D.....1	50.04.0125		1N 4448	ANY
	D.....2	50.04.0125		1N 4448	ANY
	D.....3	50.04.0512		1N 5818 1N 5819	ANY
	D.....4	50.04.0512		1N 5818 1N 5819	ANY
	D.....5	50.04.0512		1N 5818 1N 5819	ANY
	D.....6	50.04.0125		1N 4448	ANY
	D.....7	50.04.0125		1N 4448	ANY
	D.....8	50.04.0512		1N 5818 1N 5819	ANY
	D.....9	50.04.0125		1N 4448	ANY
	D....10	50.04.0512		1N 5818 1N 5819	ANY
	D....11	50.04.0512		1N 5818 1N 5819	ANY
	D....12	50.04.0125		1N 4448	ANY
	DL....1	50.04.2121		TLUR 240 RT MATT	ANY
	DL....2	50.04.2121		TLUR 240 RT MATT	ANY
	DL....3	50.04.2121		TLUR 240 RT MATT	ANY
	DL....4	50.04.2121		TLUR 240 RT MATT	ANY
	DL....5	50.04.2132		TLUG 2400 GN	ANY
	DL....6	50.04.2133		CQY 75 N GB	ANY
	DL....7	50.04.2133		CQY 75 N GB	ANY
	DL....8	50.04.2133		CQY 75 N GB	ANY
	DL....9	50.04.2133		CQY 75 N GB	ANY
	DL...10	50.04.2132		TLUG 2400 GN	ANY
	DL...11	50.04.2133		CQY 75 N GB	ANY
	DL...12	50.04.2121		TLUR 240 RT MATT	ANY
	DL...13	50.04.2121		TLUR 240 RT MATT	ANY
	DL...14	50.04.2133		CQY 75 N GB	ANY
	DL...15	50.04.2132		TLUG 2400 GN	ANY

STUDER (00) 91/14/02 LAR PIF-BOARD PL 1.862.656.21 PAGE 4

IND.	POS.NO.	PART NO.	VALUE	SPECIFICATIONS / EQUIVALENT	MANUF.
	DL...16	50.04.2133		CQY 75 N GB	ANY
	F.....1	51.99.0133		MINIFUSE 7A	ANY
	IC....1	50.17.7245		74 ACT 245	ANY
	IC....2	50.17.7574		74 ACT 574	ANY
	IC....3	50.15.0121		SN 75174 N	ANY
	IC....4	50.18.0101		GAL 20 V 8 (SW 1.862.928.20)	ANY
	IC....5	50.06.0245		SN 74 LS 245 N	ANY
	IC....6	50.17.7541		74 ACT 541	ANY
	IC....7	50.17.7541		74 ACT 541	ANY
	IC....8	50.15.0121		SN 75174 N	ANY
	IC....9	50.15.0104		MC 3486 P DS 3486 N	ANY
	IC...10	50.15.0121		SN 75174 N	ANY
	IC...11	50.15.0121		SN 75174 N	ANY
	IC...12	50.15.0121		SN 75174 N	ANY
	IC...13	50.15.0104		MC 3486 P DS 3486 N	ANY
	IC...14	50.15.0104		MC 3486 P DS 3486 N	ANY
	IC...15	50.15.0121		SN 75174 N	ANY
	IC...16	50.06.0138		SN 74 LS 138 N	ANY
	IC...17	50.06.0138		SN 74 LS 138 N	ANY
	IC...18	50.06.0005		SN 74 LS 05 N	ANY
	IC...19	50.17.7074		74 ACT 74	ANY
	IC...20	50.17.7000		74 ACT 00	ANY
	IC...21	50.06.0148		SN 74 LS 148 N	ANY
	IC...22	50.17.7573		74 ACT 573	ANY
	IC...23	50.17.7245		74 ACT 245	ANY
	IC...24	50.17.7541		74 ACT 541	ANY
	IC...25	50.18.0100		GAL 16 V 8 (SW 1.862.933.20)	ANY
	IC...26	50.16.0118		Z 8038 PS 4 MHZ	ANY
	IC...27	50.17.7008		74 ACT 08	ANY
	IC...28	50.06.0138		74 LS 138 N	ANY
	IC...29	50.16.0114		HD 68 A 52	ANY
	IC...30	50.17.7574		74 ACT 574	ANY
	IC...31	50.18.0100		GAL 16 V 8 (SW 1.862.934.20)	ANY
	IC...32	50.18.0100		GAL 16 V 8 (SW 1.862.935.20)	ANY
	IC...33	50.18.0100		GAL 16 V 8 (SW 1.862.932.20)	ANY

STUDER (00) 91/14/02 LAR PIF-BOARD PL 1.862.656.21 PAGE 5

IND.	POS.NO.	PART NO.	VALUE	SPECIFICATIONS / EQUIVALENT	MANUF.
	IC...34	50.14.0133		HM 6264LP-15	ANY
	IC...35	50.14.2004		HN 27256 F1 (SW 1.862.937.21)	ANY
	IC...36	50.16.0118		Z 8038 PS 4 MHZ,	ANY
	IC...37	50.16.0119		HD 63 A 03 RP	ANY
	IC...38	50.16.0118		Z 8038 PS 4 MHZ,	ANY
	IC...39	50.17.7541		74 ACT 541	ANY
	IC...40	50.18.0100		GAL 16 V 8 (SW 1.862.930.20)	ANY
	IC...41	50.17.7074		74 ACT 74	ANY
	IC...42	50.14.0133		HM 6264LP-15	ANY
	IC...43	50.14.2004		HN 27256 F1 (SW 1.862.938.21)	ANY
	IC...44	50.18.0100		GAL 16 V 8 (SW 1.862.929.20)	ANY
	IC...45	50.18.0100		GAL 16 V 8 (SW 1.862.931.20)	ANY
	IC...46	50.17.7573		74 ACT 573	ANY
	IC...47	50.16.0118		Z 8038 PS 4 MHZ,	ANY
	IC...48	50.16.0119		HD 63 A 03 RP	ANY
	IC...49	50.06.0595		SN 74 LS 595 N	ANY
	IC...50	50.06.0166		SN 74 LS 166 N	ANY
	IC...51	50.15.0120		MAX 232 CPE	ANY
	IC...52	50.17.7541		74 ACT 541	ANY
	IC...53	50.17.7574		74 ACT 574	ANY
	IC...54	50.16.0118		Z 8038 PS 4 MHZ,	ANY
	IC...55	50.17.7245		74 ACT 245	ANY
	IC...56	50.17.7573		74 ACT 573	ANY
	IC...57	50.17.7573		74 ACT 573	ANY
	IC...58	50.16.0118		Z 8038 PS 4 MHZ,	ANY
	IC...59	50.16.0101		HD 68 A 50 P	ANY
	IC...60	50.14.0133		HM 6264LP-15	ANY
	IC...61	50.14.2004		HN 27256 F1 (SW 1.862.939.20)	ANY
	IC...62	50.18.0100		GAL 16 V 8 (SW 1.862.930.20)	ANY
	IC...63	50.17.7573		74 ACT 573	ANY
	IC...64	50.17.7541		74 ACT 541	ANY
	IC...65	50.17.7574		74 ACT 574	ANY
	IC...66	50.16.0118		Z 8038 PS 4 MHZ,	ANY
	IC...67	50.14.0133		HM 6264LP-15	ANY
	IC...68	50.14.2004		HN 27256 F1 (SW 1.862.940.21)	ANY
	IC...69	50.16.0119		HD 63 A 03 RP	ANY
	IC...70	50.15.0115		SN 75176 BP, DS 3695 N	ANY

STUDER (00) 91/14/02 LAR PIF-BOARD PL 1.862.656.21 PAGE 6

IND.	POS.NO.	PART NO.	VALUE	SPECIFICATIONS / EQUIVALENT	MANUF.
	IC...71	50.15.0115		SN 75176 BP, DS 3695 N	ANY
	IC...72	50.16.0118		Z 8038 PS 4 MHZ	ANY
	IC...73	50.18.0100		GAL 16 V 8 (SW 1.862.936.20)	ANY
	IC...74	50.17.7573		74 ACT 573	ANY
	IC...75	50.17.7245		74 ACT 245	ANY
	IC...76	50.16.0119		HD 63 A 03 RP	ANY
	IC...77	50.18.0100		GAL 16 V 8 (SW 1.862.929.20)	ANY
	IC...78	50.18.0100		GAL 16 V 8 (SW 1.862.930.20)	ANY
	IC...79	50.16.0153		SAB 82520-P	ANY
	IC...80	50.17.7573		74 ACT 573	ANY
	IC...81	50.17.7573		74 ACT 573	ANY
	IC...82	50.06.0148		SN 74 LS 148 N	ANY
	IC...83	50.06.0393		SN 74 LS 393 N	ANY
	IC...84	50.17.7074		74 ACT 74	ANY
	IC...85	50.21.0169		74 F 169	ANY
	IC...86	50.07.0020		MC 14020 BCP, ..4020..	ANY
	IC...87	50.06.0148		SN 74 LS 148 N	ANY
	IC...89	50.17.0541		74 HCT 541	ANY
	IC...90	50.18.0100		GAL 16 V 8 (SW 1.862.929.20)	ANY
	IC...91	50.17.7574		74 ACT 574	ANY
	IC...92	50.17.7074		74 ACT 74	ANY
	IC...93	50.06.0123		SN 74 LS 123 N	ANY
	IC...94	50.06.0123		SN 74 LS 123 N	ANY
	IC...95	50.06.0123		SN 74 LS 123 N	ANY
	IC...96	50.06.0123		SN 74 LS 123 N	ANY
	IC...97	50.15.0120		MAX 232 CPE	ANY
	IC...98	50.15.0120		MAX 232 CPE	ANY
	IC...99	50.11.0122		TL 7705 ACP	ANY
	JP....1	54.01.0021		BRUECKE 2 *.63	ANY
	JP....2	54.01.0021		BRUECKE 2 *.63	ANY
	JP....3	54.01.0021		BRUECKE 2 *.63	ANY
	JP....4	54.01.0021		BRUECKE 2 *.63	ANY
	JP....5	54.01.0021		BRUECKE 2 *.63	ANY
	JP....6	54.01.0021		BRUECKE 2 *.63	ANY
	JP....7	54.01.0021		BRUECKE 2 *.63	ANY
	JP....8	54.01.0021		BRUECKE 2 *.63	ANY

STUDER (00) 91/14/02 LAR PIF-BOARD PL 1.862.656.21 PAGE 7

IND.	POS.NO.	PART NO.	VALUE	SPECIFICATIONS / EQUIVALENT	MANUF.
	JP....9	54.01.0021		BRUECKE 2 *.63	ANY
	JP...10	54.01.0021		BRUECKE 2 *.63	ANY
	JP...11	54.01.0021		BRUECKE 2 *.63	ANY
	L.....1	62.03.0030	110 u	3 A, FILTER	ANY
	MP....1	1.010.015.50		ISOLIER-SCHEIBE TO 5	ANY
	MP....2	1.862.656.11		PCB	St
	MP....3	43.01.0108		ESE-WARNSCHILD	ANY
	MP....4	1.862.656.01		ETIK. PRINT.NR	St
	MP....5	1.010.130.51		TEXT-ETIK. 5*20 (F7.00A)	ST
	MP....6	1.101.001.21		TEXT-ETIK. 5*20 HARDWARE -21	ST
	MP....7	28.99.0119		ROHRNIETE D 2.5*0.15* 10	ANY
	MP....8	28.99.0119		ROHRNIETE D 2.5*0.15* 10	ANY
	MP....9	28.99.0119		ROHRNIETE D 2.5*0.15* 10	ANY
	MP...10	28.99.0119		ROHRNIETE D 2.5*0.15* 10	ANY
	MP...11	1.010.003.89		QUARZ _ UNTERLAGE	ANY
	MP...12	1.862.656.02		TEXT-ETIKETTE PIF	ST
	MP...13	1.862.650.05		AUSWERFERHEBEL	ST
	MP...14	1.862.650.05		AUSWERFERHEBEL	ST
	MP...15	1.862.650.06		AUSWERFERSTIFT	ST
	MP...16	1.862.650.06		AUSWERFERSTIFT	ST
	MP...17	1.010.107.64		WRAPP-DRAHT	ANY
	P.....1	54.01.0358		LEISTE 3 * 32 EURO PRINT	ANY
	P.....2	54.01.0358		LEISTE 3 * 32 EURO PRINT	ANY
	P.....3	54.11.0125		63*.63 WINKEL, AU QTY12	ANY
	P.....4	54.01.0020		63*.63, H=5.8/3.4 QTY27	ANY
	Q.....1	50.03.0340		BC 337-25	ANY
	Q.....2	50.03.0351		BC 327-25	ANY
	Q.....3	50.03.0351		BC 327-25	ANY
	Q.....4	50.03.0340		BC 337-25	ANY
	Q.....5	50.03.0340		BC 337-25	ANY
	Q.....6	50.03.0351		BC 327-25	ANY
	R.....1	57.11.3332	3,3 k	1%, 0207 , MF	ANY

STUDER (00) 91/14/02 LAR PIF-BOARD PL 1.862.656.21 PAGE 8

IND.	POS.NO.	PART NO.	VALUE	SPECIFICATIONS / EQUIVALENT	MANUF.
	R.....2	57.11.3331	330	1%, 0207 , MF	ANY
	R.....3	57.11.3331	330	1%, 0207 , MF	ANY
	R.....4	57.11.3151	150	1%, 0207 , MF	ANY
	R.....5	57.11.3151	150	1%, 0207 , MF	ANY
	R.....6	57.11.3101	100	1%, 0207 , MF	ANY
	R.....7	57.11.3100	10	1%, 0207 , MF	ANY
	R.....8	57.11.3471	470	1% 0207 , MF	ANY
	R.....9	57.11.3100	10	1%, 0207 , MF	ANY
	R....10	57.11.3101	100	1%, 0207 , MF	ANY
	R....11	57.11.3000	0	0207 , MF	ANY
	R....15	57.11.3000	0	0207 , MF	ANY
	R....16	57.11.3000	0	0207 , MF	ANY
	R....17	57.11.3000	0	0207 , MF	ANY
	R....19	57.11.3000	0	0207 , MF	ANY
	R....21	57.11.3000	0	0207 , MF	ANY
	R....24	57.11.3000	0	0207 , MF	ANY
	R....27	57.11.3479	4.7	1%, 0207 , MF	ANY
	R....31	57.11.3101	100	1%, 0207 , MF	ANY
	R....32	57.11.3332	3,3 k	1%, 0207 , MF	ANY
	R....33	57.11.3332	3,3 k	1%, 0207 , MF	ANY
	R....34	57.11.3120	12	1% 0207 , MF	ANY
	R....35	57.11.3471	470	1% 0207 , MF	ANY
	R....36	57.11.3120	12	1% 0207 , MF	ANY
	R....37	57.11.3471	470	1% 0207 , MF	ANY
	R....38	57.11.3120	12	1% 0207 , MF	ANY
	R....39	57.11.3120	12	1% 0207 , MF	ANY
	R....42	57.11.3000	0	0207 , MF	ANY
	R....51	57.11.3000	0	0207 , MF	ANY
	R....52	57.11.3479	4.7	1%, 0207 , MF	ANY
	R....53	57.11.3102	1 k	1%, 0207 , MF	ANY
	R....54	57.11.3471	470	1%, 0207 , MF	ANY
	R....55	57.11.3332	3.3 K	1%, 0207 , MF	ANY
	R....56	57.11.3471	470	1%, 0207 , MF	ANY
	R....57	57.11.3332	3,3 k	1%, 0207 , MF	ANY
	R....58	57.11.3331	330	1%, 0207 , MF	ANY
	R....59	57.11.3153	15 k	1%, 0207 , MF	ANY
	R....60	57.11.3153	15 k	1%, 0207 , MF	ANY

STUDER (00) 91/14/02 LAR PIF-BOARD PL 1.862.656.21 PAGE 9

IND.	POS.NO.	PART NO.	VALUE	SPECIFICATIONS / EQUIVALENT	MANUF.
	R....61	57.11.3331	330	1%, 0207 , MF	ANY
	R....62	57.11.3153	15 k	1%, 0207 , MF	ANY
	R....63	57.11.3331	330	1%, 0207 , MF	ANY
	R....64	57.11.3153	15 k	1%, 0207 , MF	ANY
	R....65	57.11.3331	330	1%, 0207 , MF	ANY
	R....66	57.11.3104	100 k	1%, 0207 , MF	ANY
	R....67	57.11.3331	330	1%, 0207 , MF	ANY
	R....68	57.11.3104	100 k	1%, 0207 , MF	ANY
	R....69	57.11.3331	330	1%, 0207 , MF	ANY
	R....70	57.11.3104	100 k	1%, 0207 , MF	ANY
	R....71	57.11.3331	330	1%, 0207 , MF	ANY
	R....72	57.11.3331	330	1%, 0207 , MF	ANY
	R....73	57.11.3104	100 k	1%, 0207 , MF	ANY
	RZ....1	57.88.4331		8 * 330 E 2%, SIP 9	ANY
	RZ....2	57.88.4471		8 * 470 E 2%, SIP 9	ANY
	RZ....3	57.88.4103		8 * 10 k, 2%, SIP 9	ANY
	RZ....4	57.88.4332		8 * 3.3 k, 2%, SIP 9	ANY
	RZ....5	57.88.4332		8 * 3.3 k, 2%, SIP 9	ANY
	RZ....6	57.88.4332		8 * 3.3 k, 2%, SIP 9	ANY
	RZ....7	57.88.4332		8 * 3.3 k, 2%, SIP 9	ANY
	RZ....8	57.88.4332		8 * 3.3 k, 2%, SIP 9	ANY
	RZ....9	57.88.4332		8 * 3.3 k, 2%, SIP 9	ANY
	RZ...10	57.88.4332		8 * 3.3 k, 2%, SIP 9	ANY
	RZ...11	57.88.4332		8 * 3.3 k, 2%, SIP 9	ANY
	RZ...12	57.88.4332		8 * 3.3 k, 2%, SIP 9	ANY
	RZ...13	57.88.4331		8 * 330 E 2%, SIP 9	ANY
	S.....1	55.03.0122		TASTE 1*A, PRINT,IMPULS	ANY
	TP....1	54.02.0320		2.8*0.8, GERADE	ANY
	TP....2	54.02.0320		2.8*0.8, GERADE	ANY
	TP....3	54.02.0320		2.8*0.8, GERADE	ANY
	TP....4	54.02.0320		2.8*0.8, GERADE	ANY
	TP....5	54.02.0320		2.8*0.8, GERADE	ANY
	TP....6	54.02.0320		2.8*0.8, GERADE	ANY

STUDER (00) 91/14/02 LAR PIF-BOARD PL 1.862.656.21 PAGE 10

IND.	POS.NO.	PART NO.	VALUE	SPECIFICATIONS / EQUIVALENT	MANUF.
	XIC...1	53.03.0165		XIC DIL 20-POL	ANY
	XIC...3	53.03.0168		XIC DIL 16-POL	ANY
	XIC...4	53.03.0182		XIC DIL 24-POL	ANY
	XIC...5	53.03.0165		XIC DIL 20-POL	ANY
	XIC...6	53.03.0165		XIC DIL 20-POL	ANY
	XIC...7	53.03.0165		XIC DIL 20-POL	ANY
	XIC...8	53.03.0168		XIC DIL 16-POL	ANY
	XIC...9	53.03.0168		XIC DIL 16-POL	ANY
	XIC..10	53.03.0168		XIC DIL 16-POL	ANY
	XIC..11	53.03.0168		XIC DIL 16-POL	ANY
	XIC..12	53.03.0168		XIC DIL 16-POL	ANY
	XIC..13	53.03.0168		XIC DIL 16-POL	ANY
	XIC..14	53.03.0168		XIC DIL 16-POL	ANY
	XIC..15	53.03.0168		XIC DIL 16-POL	ANY
	XIC..18	53.03.0167		XIC DIL 14-POL	ANY
	XIC..25	53.03.0165		XIC DIL 20-POL	ANY
	XIC..31	53.03.0165		XIC DIL 20-POL	ANY
	XIC..32	53.03.0165		XIC DIL 20-POL	ANY
	XIC..33	53.03.0165		XIC DIL 20-POL	ANY
	XIC..35	53.03.0173		XIC DIL 28-POL	ANY
	XIC..37	53.03.0172		XIC DIL 40-POL	ANY
	XIC..40	53.03.0165		XIC DIL 20-POL	ANY
	XIC..43	53.03.0173		XIC DIL 28-POL	ANY
	XIC..44	53.03.0165		XIC DIL 20-POL	ANY
	XIC..45	53.03.0165		XIC DIL 20-POL	ANY
	XIC..48	53.03.0172		XIC DIL 40-POL	ANY
	XIC..51	53.03.0168		XIC DIL 16-POL	ANY
	XIC..61	53.03.0173		XIC DIL 28-POL	ANY
	XIC..62	53.03.0165		XIC DIL 20-POL	ANY
	XIC..68	53.03.0173		XIC DIL 28-POL	ANY
	XIC..69	53.03.0172		XIC DIL 40-POL	ANY
	XIC..70	53.03.0166		XIC DIL 8-POL	ANY
	XIC..71	53.03.0166		XIC DIL 8-POL	ANY
	XIC..73	53.03.0165		XIC DIL 20-POL	ANY
	XIC..76	53.03.0172		XIC DIL 40-POL	ANY
	XIC..77	53.03.0165		XIC DIL 20-POL	ANY
	XIC..78	53.03.0165		XIC DIL 20-POL	ANY

STUDER (00) 91/14/02 LAR PIF-BOARD PL 1.862.656.21 PAGE 11

IND.	POS.NO.	PART NO.	VALUE	SPECIFICATIONS / EQUIVALENT	MANUF.
	XIC..79	53.03.0173		XIC DIL 28-POL	ANY
	XIC..90	53.03.0165		XIC DIL 20-POL	ANY
	XIC..97	53.03.0168		XIC DIL 16-POL	ANY
	XIC..98	53.03.0168		XIC DIL 16-POL	ANY
	Y.....1	89.01.1807		Y-OSC 19.6608 MHZ	ANY

REMARKS:

AENDERUNGEN:
21: SW-UPDATE V2.1 IC35 AENDERT AUF 1.862.937.21
IC43 AENDERT AUF 1.862.938.21
IC68 AENDERT AUF 1.862.940.21
21: IC89 AENDERT AUF HCT
21: NEU WRAPP-DRAHT FUER LAYOUT-KORREKTUR

MANUFACTURERS:
St = STUDER

ABBREVIATIONS:
CER = CERAMIC / FILM = FILM TYPE / XF = CLAMP FOR FUSES /
XIC = IC SOCKET

ORIG 91/14/02

STUDER (00) 91/14/02 LAR PIF-BOARD PL 1.862.656.21 PAGE 12

BLOCK DIAGRAM REFERENCE TIME BOARD

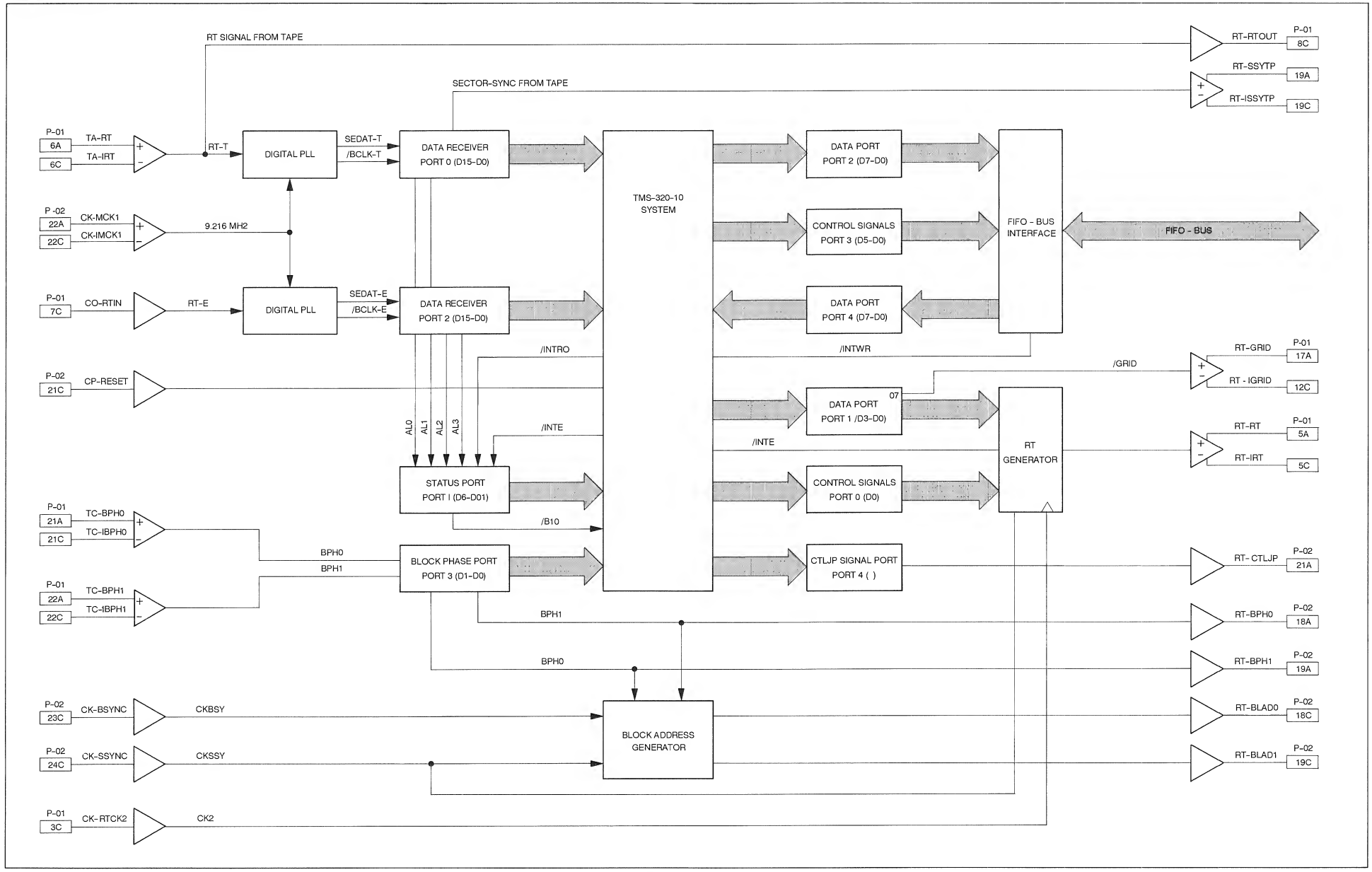

REFERENCE TIME BOARD 1.862.657.23

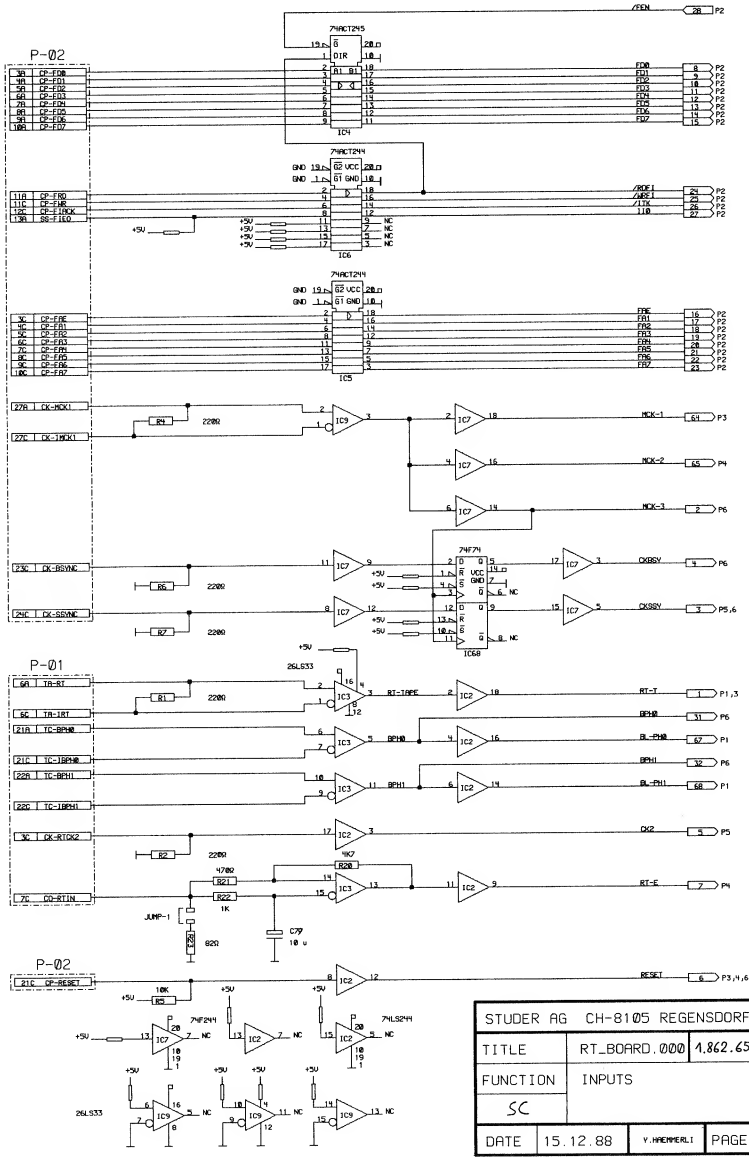

STUDER AG CH-8105 REGENSDORF			
TITLE	RT_BOARD.000	1.862.657.23	
FUNCTION	INPUTS		
SC			
DATE	15.12.88	Y.HAEMMERLI	PAGE 0/6

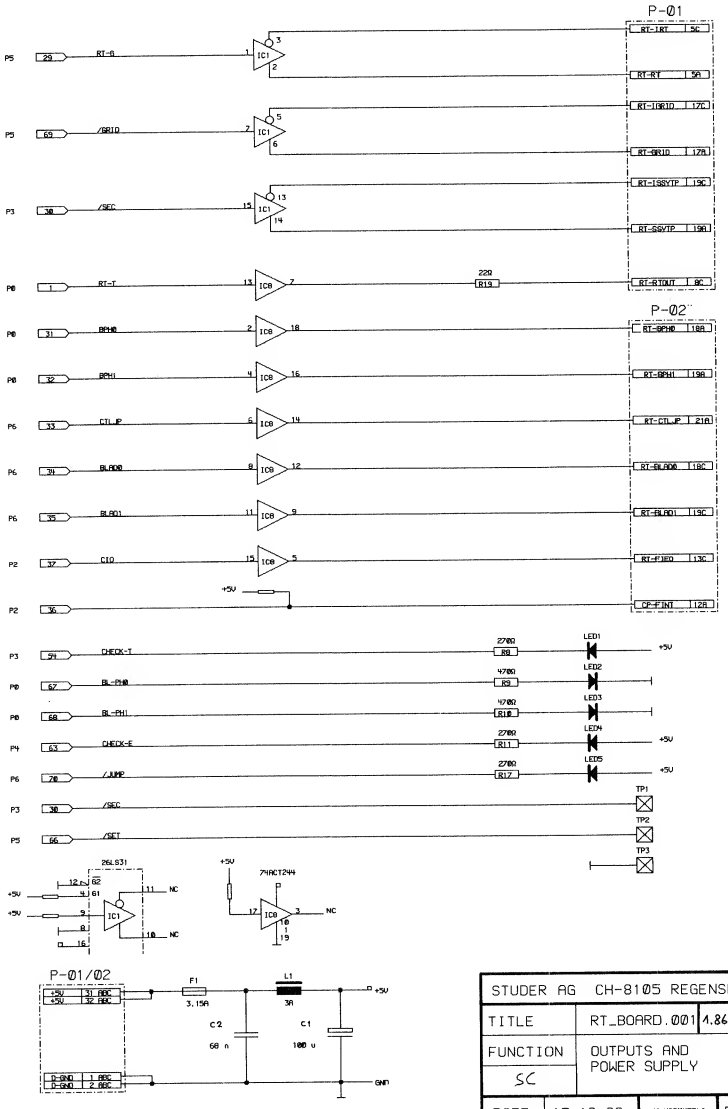

STUDER AG CH-8105 REGENSDORF			
TITLE	RT_BOARD.001	1.862.657.23	
FUNCTION	OUTPUTS AND POWER SUPPLY		
SC			
DATE	15.12.88	Y.HAEMMERLI	PAGE 1/6

REFERENCE TIME BOARD 1.862.657.23

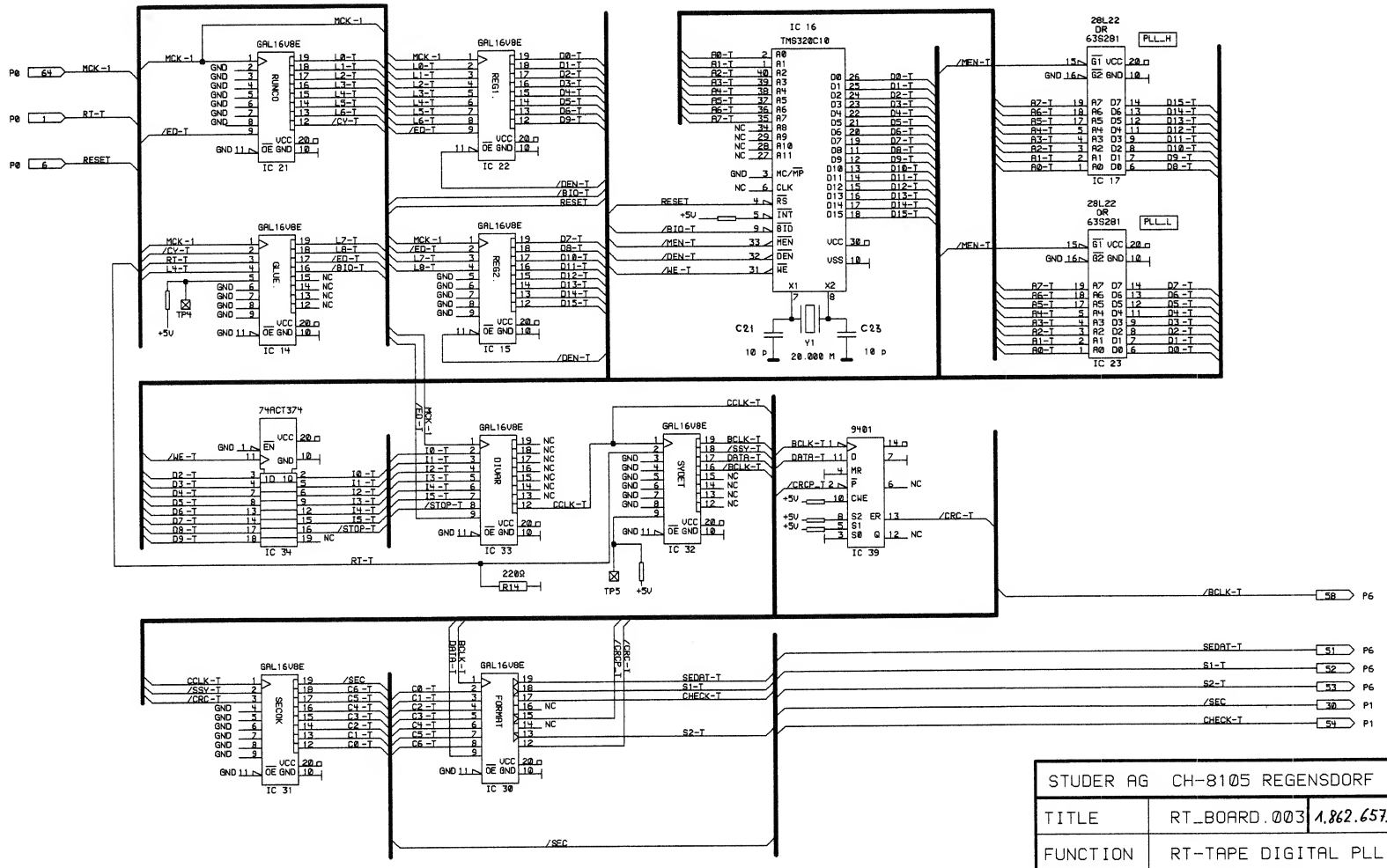

STUDER AG CH-8105 REGENSDORF			
TITLE	RT_BOARD.003	1.862.657.23	
FUNCTION	RT-TAPE DIGITAL PLL AND DATA EXTRACTION		
SC			
DATE	15.12.88	Y.HAEMMERLI	PAGE 3/6

REFERENCE TIME BOARD 1.862.657.23

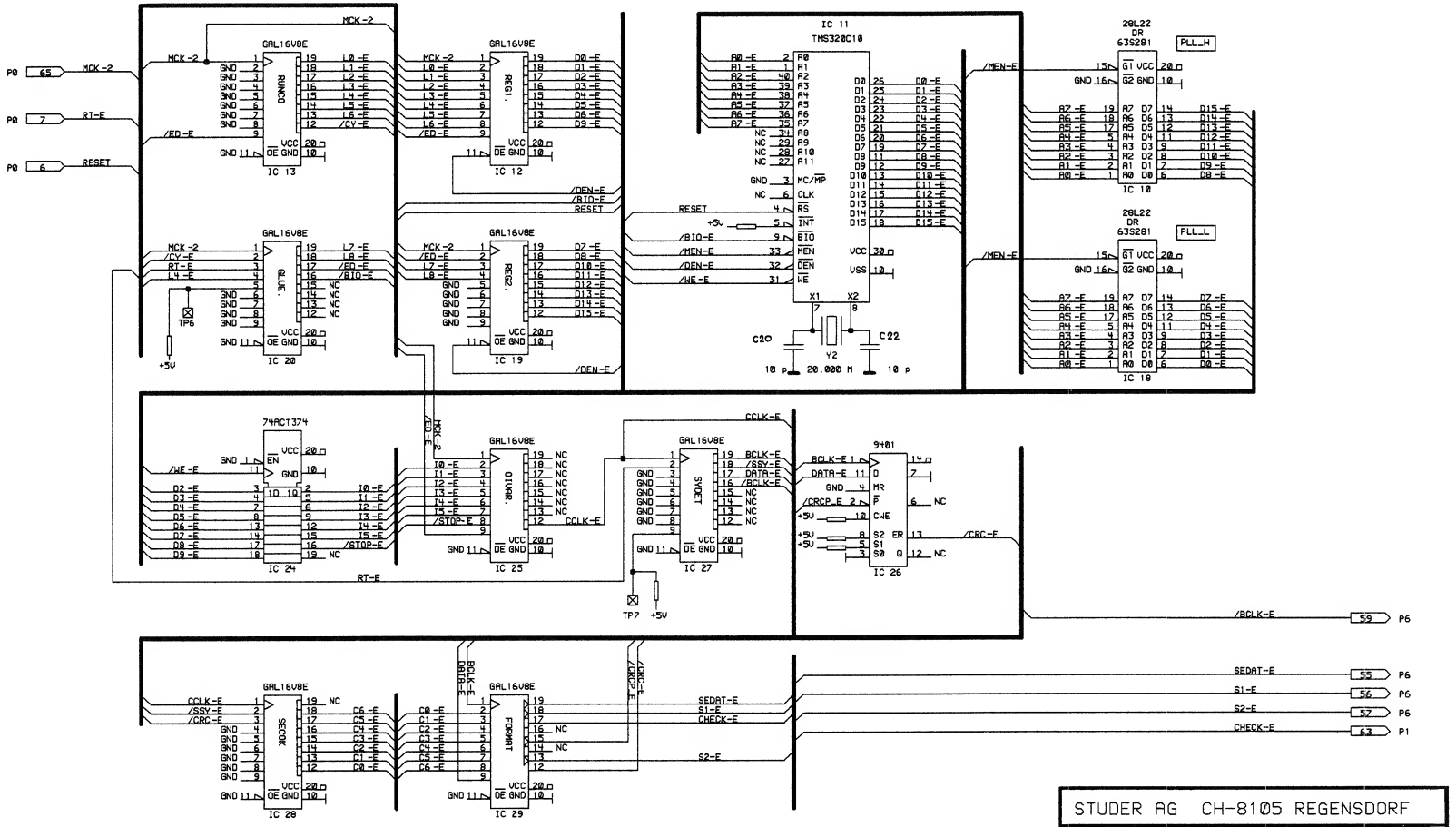

STUDER AG	CH-8105 REGENSDORF		
TITLE	RT_BOARD.004	1.862.657.23	
FUNCTION	RT-EXT DIGITAL PLL		
SC	AND DATA EXTRACTION		
DATE	15.12.88	Y.HAEMMERLI	PAGE 4/6

REFERENCE TIME BOARD 1.862.657.23

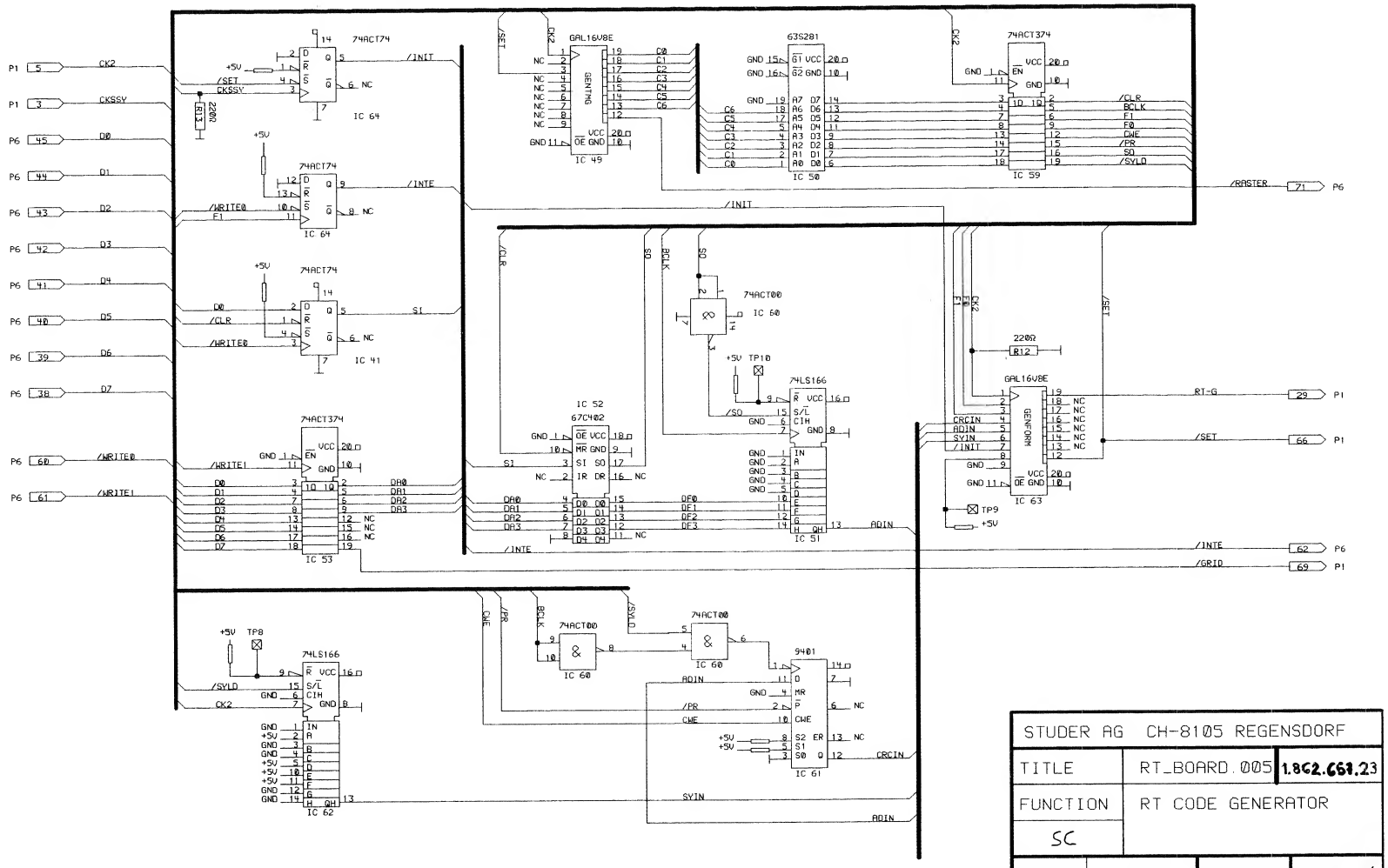

STUDER AG CH-8105 REGENSDORF			
TITLE	RT_BOARD.005	1.862.657.23	
FUNCTION	RT CODE GENERATOR		
SC			
DATE	1.2.90	Y. HAEMMERLI	PAGE 5/6

REFERENCE TIME BOARD 1.862.657.23

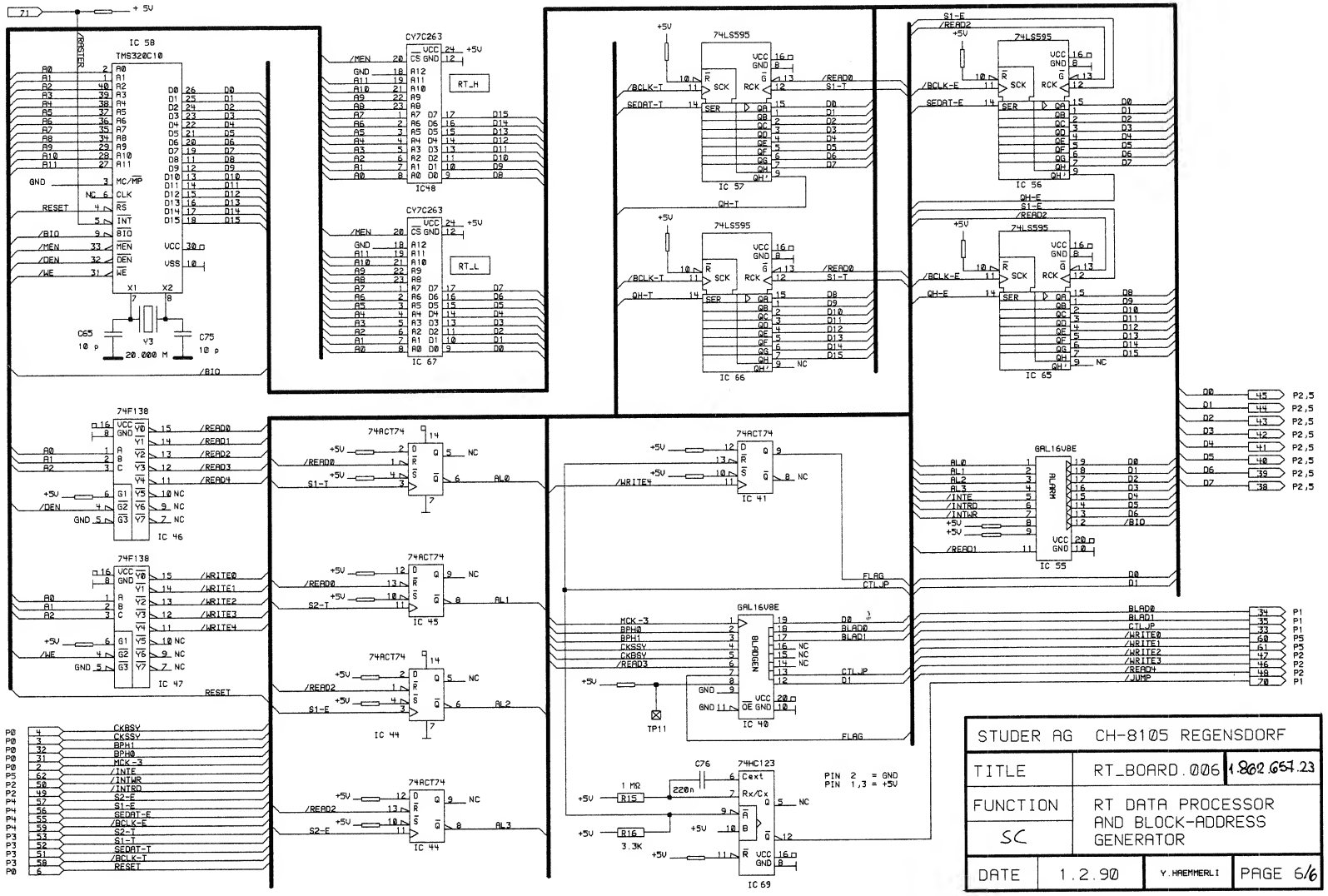

REFERENCE TIME BOARD 1.862.657.23

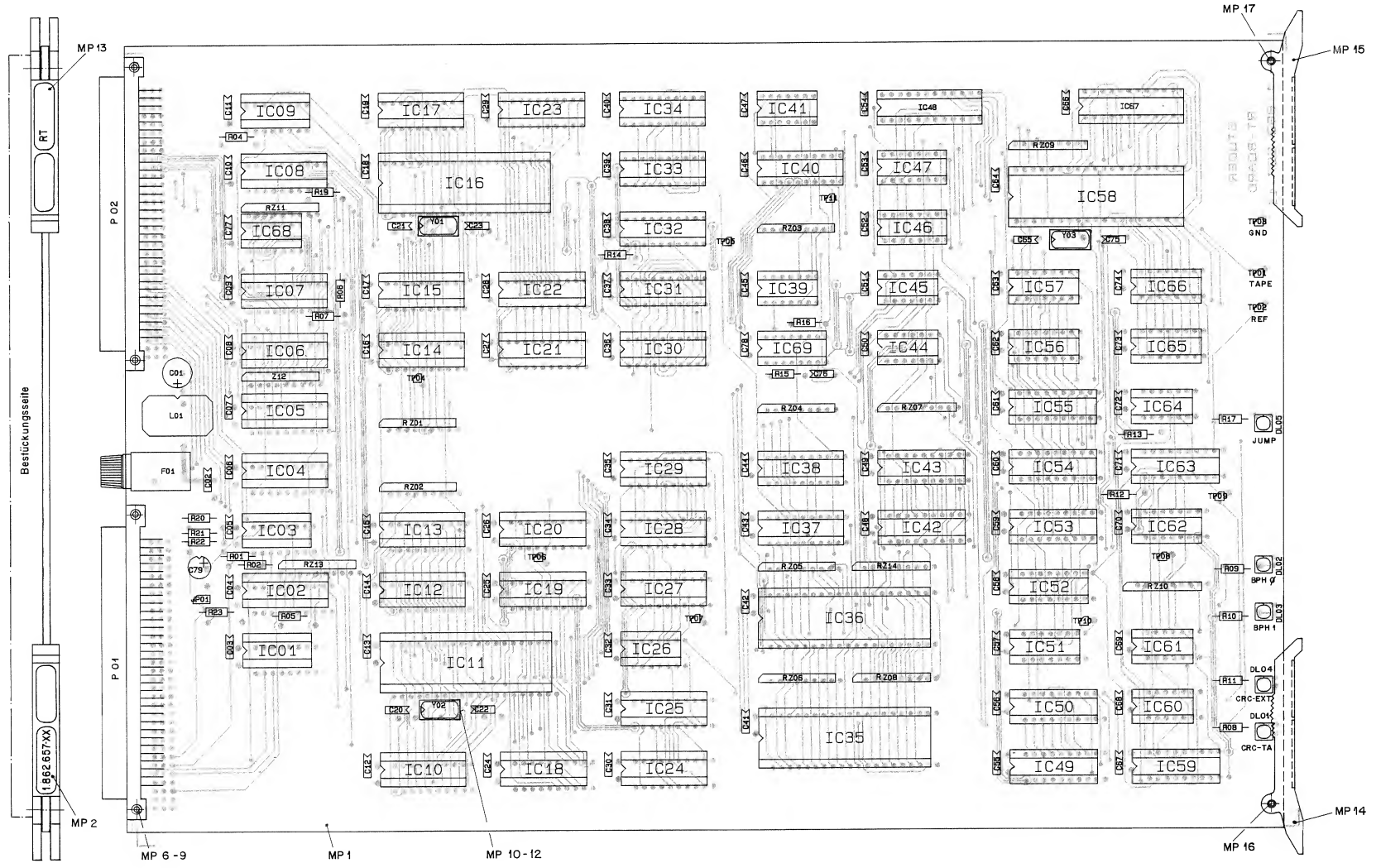

REFERENCE TIME BOARD 1.862.657.23

IND.	POS.NO.	PART NO.	VALUE	SPECIFICATIONS / EQUIVALENT	MANUF.
	C....1	59.22.3471	470 u	-20%, 10V , EL	ANY
	C....2	59.06.0683	.068 u	10%, 63V	ANY
	C....3	59.06.0683	.068 u	10%, 63V	ANY
	C....4	59.06.0683	.068 u	10%, 63V	ANY
	C....5	59.06.0683	.068 u	10%, 63V	ANY
	C....6	59.06.0683	.068 u	10%, 63V	ANY
	C....7	59.06.0683	.068 u	10%, 63V	ANY
	C....8	59.06.0683	.068 u	10%, 63V	ANY
	C....9	59.06.0683	.068 u	10%, 63V	ANY
	C....10	59.06.0683	.068 u	10%, 63V	ANY
	C....11	59.06.0683	.068 u	10%, 63V	ANY
	C....12	59.06.0683	.068 u	10%, 63V	ANY
	C....13	59.06.0683	.068 u	10%, 63V	ANY
	C....14	59.06.0683	.068 u	10%, 63V	ANY
	C....15	59.06.0683	.068 u	10%, 63V	ANY
	C....16	59.06.0683	.068 u	10%, 63V	ANY
	C....17	59.06.0683	.068 u	10%, 63V	ANY
	C....18	59.06.0683	.068 u	10%, 63V	ANY
	C....19	59.06.0683	.068 u	10%, 63V	ANY
	C....20	59.34.1100	10 p	5%, 63V , CER	ANY
	C....21	59.34.1100	10 p	5%, 63V , CER	ANY
	C....22	59.34.1100	10 p	5%, 63V , CER	ANY
	C....23	59.34.1100	10 p	5%, 63V , CER	ANY
	C....24	59.06.0683	.068 u	10%, 63V	ANY
	C....25	59.06.0683	.068 u	10%, 63V	ANY
	C....26	59.06.0683	.068 u	10%, 63V	ANY
	C....27	59.06.0683	.068 u	10%, 63V	ANY
	C....28	59.06.0683	.068 u	10%, 63V	ANY
	C....29	59.06.0683	.068 u	10%, 63V	ANY
	C....30	59.06.0683	.068 u	10%, 63V	ANY
	C....31	59.06.0683	.068 u	10%, 63V	ANY
	C....32	59.06.0683	.068 u	10%, 63V	ANY
	C....33	59.06.0683	.068 u	10%, 63V	ANY
	C....34	59.06.0683	.068 u	10%, 63V	ANY
	C....35	59.06.0683	.068 u	10%, 63V	ANY
	C....36	59.06.0683	.068 u	10%, 63V	ANY
	C....37	59.06.0683	.068 u	10%, 63V	ANY

IND.	POS.NO.	PART NO.	VALUE	SPECIFICATIONS / EQUIVALENT	MANUF.
	C....38	59.06.0683	.068 u	10%, 63V	ANY
	C....39	59.06.0683	.068 u	10%, 63V	ANY
	C....40	59.06.0683	.068 u	10%, 63V	ANY
	C....41	59.06.0683	.068 u	10%, 63V	ANY
	C....42	59.06.0683	.068 u	10%, 63V	ANY
	C....43	59.06.0683	.068 u	10%, 63V	ANY
	C....44	59.06.0683	.068 u	10%, 63V	ANY
	C....45	59.06.0683	.068 u	10%, 63V	ANY
	C....46	59.06.0683	.068 u	10%, 63V	ANY
	C....47	59.06.0683	.068 u	10%, 63V	ANY
	C....48	59.06.0683	.068 u	10%, 63V	ANY
	C....49	59.06.0683	.068 u	10%, 63V	ANY
	C....50	59.06.0683	.068 u	10%, 63V	ANY
	C....51	59.06.0683	.068 u	10%, 63V	ANY
	C....52	59.06.0683	.068 u	10%, 63V	ANY
	C....53	59.06.0683	.068 u	10%, 63V	ANY
	C....54	59.06.0683	.068 u	10%, 63V	ANY
	C....55	59.06.0683	.068 u	10%, 63V	ANY
	C....56	59.06.0683	.068 u	10%, 63V	ANY
	C....57	59.06.0683	.068 u	10%, 63V	ANY
	C....58	59.06.0683	.068 u	10%, 63V	ANY
	C....59	59.06.0683	.068 u	10%, 63V	ANY
	C....60	59.06.0683	.068 u	10%, 63V	ANY
	C....61	59.06.0683	.068 u	10%, 63V	ANY
	C....62	59.06.0683	.068 u	10%, 63V	ANY
	C....63	59.06.0683	.068 u	10%, 63V	ANY
	C....64	59.06.0683	.068 u	10%, 63V	ANY
	C....65	59.34.1100	10 p	5%, 63V CER	ANY
	C....66	59.06.0683	.068 u	10%, 63V	ANY
	C....67	59.06.0683	.068 u	10%, 63V	ANY
	C....68	59.06.0683	.068 u	10%, 63V	ANY
	C....69	59.06.0683	.068 u	10%, 63V	ANY
	C....70	59.06.0683	.068 u	10%, 63V	ANY
	C....71	59.06.0683	.068 u	10%, 63V	ANY
	C....72	59.06.0683	.068 u	10%, 63V	ANY
	C....73	59.06.0683	.068 u	10%, 63V	ANY
	C....74	59.06.0683	.068 u	10%, 63V	ANY

IND.	POS.NO.	PART NO.	VALUE	SPECIFICATIONS / EQUIVALENT	MANUF.
	C....75	59.34.1100	10 p	5%, 63V , CER	ANY
	C....76	59.06.5224	220 n	5%, 63V , PETP	ANY
	C....77	59.06.0683	.068 u	10%, 63V , PETP	ANY
	C....78	59.06.0683	.068 u	10%, 63V , PETP	ANY
	C....79	59.22.6100	10 u	-20%, 35V , EL	ANY
	DL....1	50.04.2121		TLUB 2400	ANY
	DL....2	50.04.2132		TLUG 2400	ANY
	DL....3	50.04.2132		TLUG 2400	ANY
	DL....4	50.04.2121		TLUB 2400	ANY
	DL....5	50.04.2132		TLUR 2400	ANY
(00)	F.....1	51.01.0122		T3.15A/T/250V, 5 * 20mm	ANY
(01)	F.....1	51.99.0133		MIKIFUSE 7A	ANY
	IC....1	50.15.0108		AM26 LS 31 PC/AM26 LS31 CN	ANY
	IC....2	50.06.0244		74 LS 244	ANY
	IC....3	50.15.0109		AM 26 LS 33	ANY
	IC....4	50.17.7245		74 ACT 245	ANY
	IC....5	50.17.7244		74 ACT 244	ANY
	IC....6	50.17.7244		74 ACT 244	ANY
	IC....7	50.21.0244		74 F 244	ANY
	IC....8	50.17.7244		74 ACT 244	ANY
	IC....9	50.15.0109		AM26 LS33 PC/DS26 LS33 CN	ANY
	IC....10	50.14.0114		TBP 28L 22N (SW 1.862.956.20)	ANY
	IC....11	50.16.1002		TMS 320 C 10 -25	ANY
	IC....12	50.18.0100		16 V 8 - 25 LP (SW 1.862.951.20)	ANY
	IC....13	50.18.0100		16 V 8 - 25 LP (SW 1.862.950.20)	ANY
	IC....14	50.18.0100		16 V 8 - 25 LP (SW 1.862.949.20)	ANY
	IC....15	50.18.0100		16 V 8 - 25 LP (SW 1.862.952.20)	ANY
	IC....16	50.16.1002		TMS 320 C 10 - 25	ANY
	IC....17	50.14.0114		TBP 28L 22N (SW 1.862.956.20)	ANY
	IC....18	50.14.0114		TBP 28L 22N (SW 1.862.957.20)	ANY
	IC....19	50.18.0100		16 V 8 - 25 LP (SW 1.862.952.20)	ANY
	IC....20	50.18.0100		16 V 8 - 25 LP (SW 1.862.949.20)	ANY
	IC....21	50.18.0100		16 V 8 - 25 LP (SW 1.862.950.20)	ANY
	IC....22	50.18.0100		16 V 8 - 25 LP (SW 1.862.951.20)	ANY

IND.	POS.NO.	PART NO.	VALUE	SPECIFICATIONS / EQUIVALENT	MANUF.
	IC...23	50.14.0114		TBP 28L 22N (SW 1.862.957.20)	ANY
	IC...24	50.17.7374		74 ACT 374	ANY
	IC...25	50.18.0100		16 V 8 - 25 LP (SW 1.862.945.20)	ANY
	IC...26	50.13.0108		N 8 X 01 AN	ANY
	IC...27	50.18.0100		16 V 8 - 25 LP (SW 1.862.953.20)	ANY
	IC...28	50.18.0100		16 V 8 - 25 LP (SW 1.862.954.20)	ANY
	IC...29	50.18.0100		16 V 8 - 25 LP (SW 1.862.946.20)	ANY
	IC...30	50.18.0100		16 V 8 - 25 LP (SW 1.862.946.20)	ANY
	IC...31	50.18.0100		16 V 8 - 25 LP (SW 1.862.954.20)	ANY
	IC...32	50.18.0100		16 V 8 - 25 LP (SW 1.862.953.20)	ANY
	IC...33	50.18.0100		16 V 8 - 25 LP (SW 1.862.945.20)	ANY
	IC...34	50.17.7374		74 ACT 374	ANY
	IC...35	50.16.0118		Z 8038 PS 4 MHZ	ANY
	IC...36	50.16.0118		Z 8038 PS 4 MHZ	ANY
	IC...37	50.18.0100		16 V 8 - 25 LP (SW 1.862.944.20)	ANY
	IC...38	50.18.0100		16 V 8 - 25 LP (SW 1.862.941.20)	ANY
	IC...39	50.13.0108		N 8 X 01 AN	ANY
	IC...40	50.18.0100		16 V 8 - 25 LP (SW 1.862.943.20)	ANY
	IC...41	50.17.7074		74 ACT 74	ANY
	IC...42	50.17.7244		74 ACT 244	ANY
	IC...43	50.17.7374		74 ACT 374	ANY
	IC...44	50.17.7074		74 ACT 74	ANY
	IC...45	50.17.7074		74 ACT 74	ANY
	IC...46	50.21.0138		74 F 138	ANY
	IC...47	50.21.0138		74 F 138	ANY
	IC...48	50.14.2003		CY 7 C 263 (SW 1.862.958.23)	ANY
	IC...49	50.18.0100		16 V 8 - 25 LP (SW 1.862.947.21)	ANY
	IC...50	50.14.0114		TBP 28L 22N (SW 1.862.955.20)	ANY
	IC...51	50.06.0166		SN 74 LS 166 N	ANY
	IC...52	50.14.1001		67 C 402	ANY
	IC...53	50.17.7374		74 ACT 374	ANY
	IC...54	50.17.7374		74 ACT 374	ANY
	IC...55	50.18.0100		16 V 8 - 25 LP (SW 1.862.942.20)	ANY
	IC...56	50.06.0595		SN 74 LS 595 N	ANY
	IC...57	50.06.0595		SN 74 LS 595 N	ANY
	IC...58	50.16.1002		TMS 320 C 10 - 25	ANY
	IC...59	50.17.7374		74 ACT 374	ANY

IND.	POS.NO.	PART NO.	VALUE	SPECIFICATIONS / EQUIVALENT	MANUF.
	IC...60	50.17.7000		74 ACT 00	ANY
	IC...61	50.13.0108		N 8 X 01 AN	ANY
	IC...62	50.06.0166		SN 74 LS 166 N (SW 1.862.948.20)	ANY
	IC...63	50.18.0100		16 V 8 - 25 LP	ANY
	IC...64	50.17.7074		74 ACT 74	ANY
	IC...65	50.06.0595		SN 74 LS 595 N	ANY
	IC...66	50.06.0595		SN 74 LS 595 N	ANY
	IC...67	50.14.2003		CY 7 C 263 (SW 1.862.959.23)	ANY
	IC...68	50.21.0074		74 F 74	ANY
	IC...69	50.17.1123		74 HC 123	ANY
	J.....1	54.01.0021		BRUECKE 2 *.63	ANY
	L.....1	62.03.0030		3 A, FILTER	ANY
	MP....1	1.862.657.11		RT-PCB	Pi
	MP....2	1.862.657.01		NR.-ETIKETTE 5 * 20	ANY
	MP....3	1.101.001.20		TEXT-ETIK. 5*20 HARDWARE -20	St
(00)	MP....4	1.010.120.51		TEXT-ETIK. 5*20 (T3.15A)	St
(01)	MP....4	1.010.130.51		TEXT-ETIK. 5*20 (F7.00A)	St
	MP....5	43.01.0108		ESE-WARNSCHILD	ANY
	MP....6	28.99.0119		NOHRNIETE D 2.5*0.15* 10	ANY
	MP....7	28.99.0119		NOHRNIETE D 2.5*0.15* 10	ANY
	MP....8	28.99.0119		NOHRNIETE D 2.5*0.15* 10	ANY
	MP....9	28.99.0119		NOHRNIETE D 2.5*0.15* 10	ANY
	MP...10	89.01.1499		QUARZ _ ISOLIERPLATTE	ANY
	MP...11	89.01.1499		QUARZ _ ISOLIERPLATTE	ANY
	MP...12	89.01.1499		QUARZ _ ISOLIERPLATTE	ANY
	MP...13	1.862.657.02		TEXT - ETIKETTE RT	St
	MP...14	1.862.650.05		AUSWERFERHEBEL	St
	MP...15	1.862.650.05		AUSWERFERHEBEL	St
	MP...16	1.862.650.06		AUSWERFERSTIFT	St
	MP...17	1.862.650.06		AUSWERFERSTIFT	St
	P.....1	54.01.0358		CONNECTOR 3 * 32	ANY
	P.....2	54.01.0358		CONNECTOR 3 * 32	ANY
	P....12	54.01.0020		STIFT .63*.63/ H=5.8/3.4	ANY

IND.	POS.NO.	PART NO.	VALUE	SPECIFICATIONS / EQUIVALENT	MANUF.
	P....13	54.01.0020		STIFT .63*.63/ H=5.8/3.4	ANY
	R.....1	57.11.3221	220	1%	ANY
	R.....2	57.11.3221	220	1%	ANY
	R.....5	57.11.3103	10 k	1%	ANY
	R.....8	57.11.3271	270	1%	ANY
	R....9	57.11.3471	470	1%	ANY
	R...10	57.11.3471	470	1%	ANY
	R...11	57.11.3271	270	1%	ANY
	R...15	57.11.3105	1 M	1%, 0207 , MF	ANY
	R...16	57.11.3332	3.3 k	1%, 0207 , MF	ANY
	R...17	57.11.3271	270	1%, 0207 , MF	ANY
	R...19	57.11.3220	22	1%, 0207 , MF	ANY
	R...20	57.11.3472	4.7 k	1%, 0207 , MF	ANY
	R...21	57.11.3471	470	1%, 0207 , MF	ANY
	R...22	57.11.3102	1 k	1%, 0207 , MF	ANY
	R...23	57.11.3820	82	1%, 0207 , MF	ANY
	RZ....1	57.88.4332		8 * 3.3 k	ANY
	RZ....2	57.88.4332		8 * 3.3 k	ANY
	RZ....3	57.88.4332		8 * 3.3 k	ANY
	RZ....4	57.88.4332		8 * 3.3 k	ANY
	RZ....5	57.88.4332		8 * 3.3 k	ANY
	RZ....6	57.88.4332		8 * 3.3 k	ANY
	RZ....7	57.88.4332		8 * 3.3 k	ANY
	RZ....8	57.88.4332		8 * 3.3 k	ANY
	RZ....9	57.88.4332		8 * 3.3 k	ANY
	RZ...10	57.88.4332		8 * 3.3 k	ANY
	RZ...11	57.88.4332		8 * 3.3 k	ANY
	RZ...12	57.88.4332		8 * 3.3 k	ANY
	RZ...13	57.88.4332		8 * 3.3 k	ANY
	RZ...14	57.88.4332		8 * 3.3 k	ANY
	TP....1	54.02.0320		2.8 * 0.8 **** QTY11 ****	ANY
	W.....1	1.010.122.64	210MM	VON IC 49 PIN 12 NACH IC 58 PIN 5	ST

IND.	POS.NO.	PART NO.	VALUE	SPECIFICATIONS / EQUIVALENT	MANUF.
(00)	XF....1	53.03.0118		FUSE HOLDER	ANY
(01)	XF....1			ENTFAELLT	
	XIC..10	53.03.0165		DIL 20-PIN	ANY
	XIC..11	53.03.0172		DIL 40-PIN	ANY
	XIC..12	53.03.0165		DIL 20-PIN	ANY
	XIC..13	53.03.0165		DIL 20-PIN	ANY
	XIC..14	53.03.0165		DIL 20-PIN	ANY
	XIC..15	53.03.0165		DIL 20-PIN	ANY
	XIC..16	53.03.0172		DIL 40-PIN	ANY
	XIC..17	53.03.0165		DIL 20-PIN	ANY
	XIC..18	53.03.0165		DIL 20-PIN	ANY
	XIC..19	53.03.0165		DIL 20-PIN	ANY
	XIC..20	53.03.0165		DIL 20-PIN	ANY
	XIC..21	53.03.0165		DIL 20-PIN	ANY
	XIC..22	53.03.0165		DIL 20-PIN	ANY
	XIC..23	53.03.0165		DIL 20-PIN	ANY
	XIC..25	53.03.0165		DIL 20-PIN	ANY
	XIC..27	53.03.0165		DIL 20-PIN	ANY
	XIC..28	53.03.0165		DIL 20-PIN	ANY
	XIC..29	53.03.0165		DIL 20-PIN	ANY
	XIC..30	53.03.0165		DIL 20-PIN	ANY
	XIC..31	53.03.0165		DIL 20-PIN	ANY
	XIC..32	53.03.0165		DIL 20-PIN	ANY
	XIC..33	53.03.0165		DIL 20-PIN	ANY
	XIC..35	53.03.0172		DIL 40-PIN	ANY
	XIC..36	53.03.0172		DIL 40-PIN	ANY
	XIC..37	53.03.0165		DIL 20-PIN	ANY
	XIC..38	53.03.0165		DIL 20-PIN	ANY
	XIC..40	53.03.0165		DIL 20-PIN	ANY
	XIC..48	53.03.0182		DIL 24-PIN	ANY
	XIC..49	53.03.0165		DIL 20-PIN	ANY
	XIC..50	53.03.0165		DIL 20-PIN	ANY
	XIC..55	53.03.0165		DIL 20-PIN	ANY
	XIC..58	53.03.0172		DIL 40-PIN	ANY
	XIC..63	53.03.0165		DIL 20-PIN	ANY
	XIC..67	53.03.0182		DIL 24-PIN	ANY

IND.	POS.NO.	PART NO.	VALUE	SPECIFICATIONS / EQUIVALENT	MANUF.
	Y.....1	89.01.1007		20.000 MHZ, HC 49/U	ANY
	Y.....2	89.01.1007		20.000 MHZ, HC 49/U	ANY
	Y.....3	89.01.1007		20.000 MHZ, HC 49/U	ANY

REMARKS:

MANUFACTURERS:
ST = STUDER Ph = PHILIPS Pi = PHOTOCHEMIE

ABBREVIATIONS:
CER = CERAMIC / FILM = FILM TYPE / XF = CLAMP FOR FUSES /
XIC = IC SOCKET

ORIG 91/02/15

BLOCK DIAGRAM SSTC BOARD

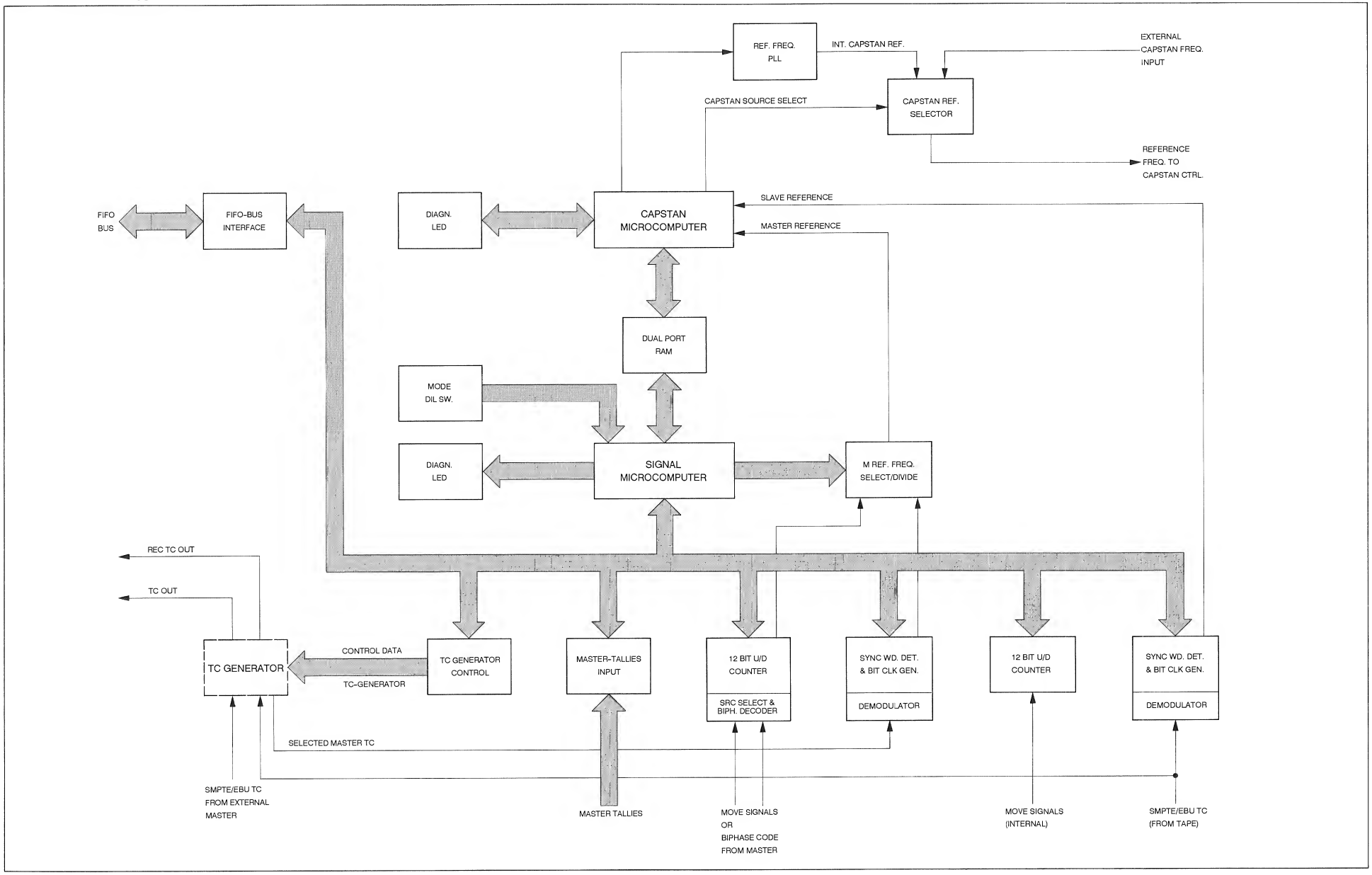

SSTC BOARD 1.862.659.22

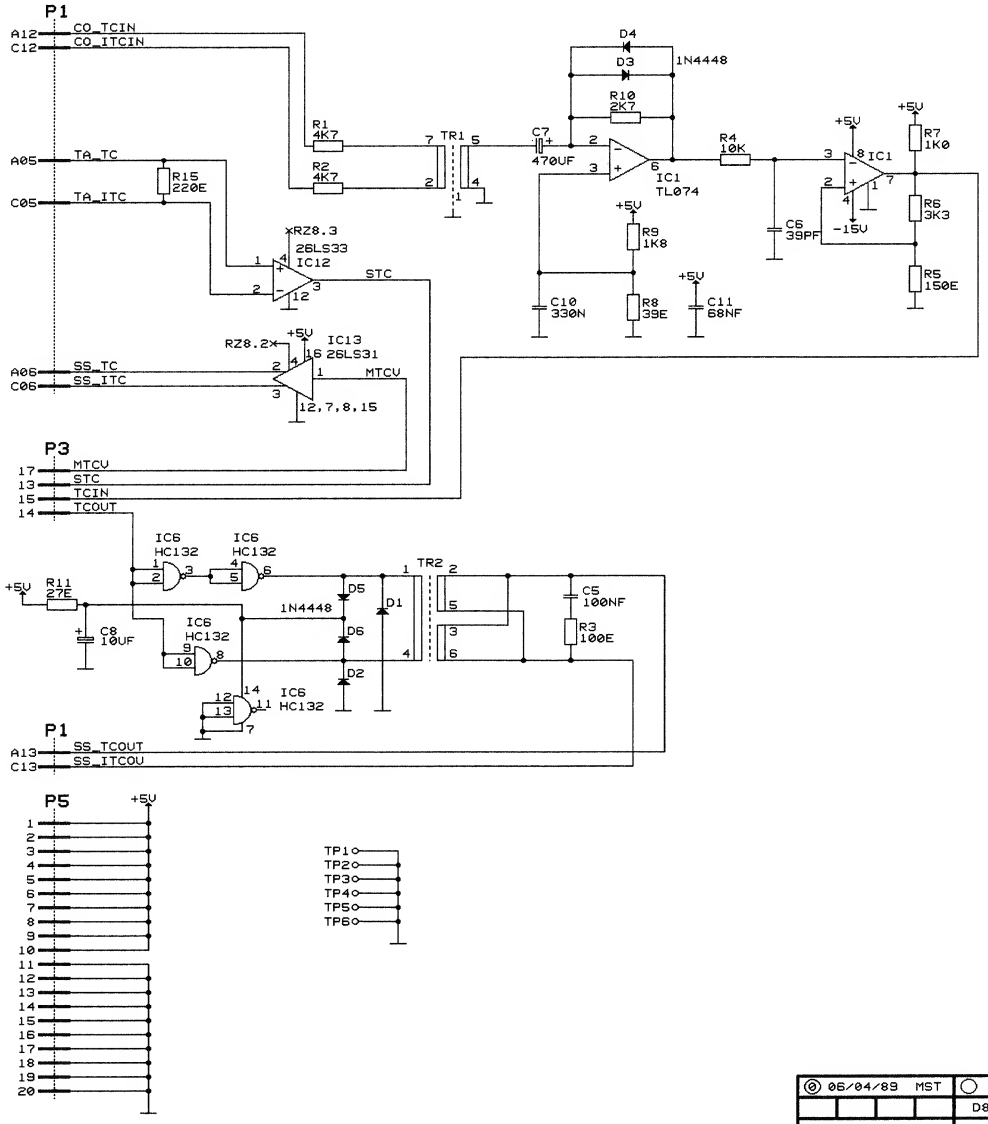

06/04/89 MST				
	D820 MULTICHANNEL			PAGE 1 OF 9
STUDER	SSTC BOARD		SC	1.862.659.22

SSTC BOARD 1.862.659.22

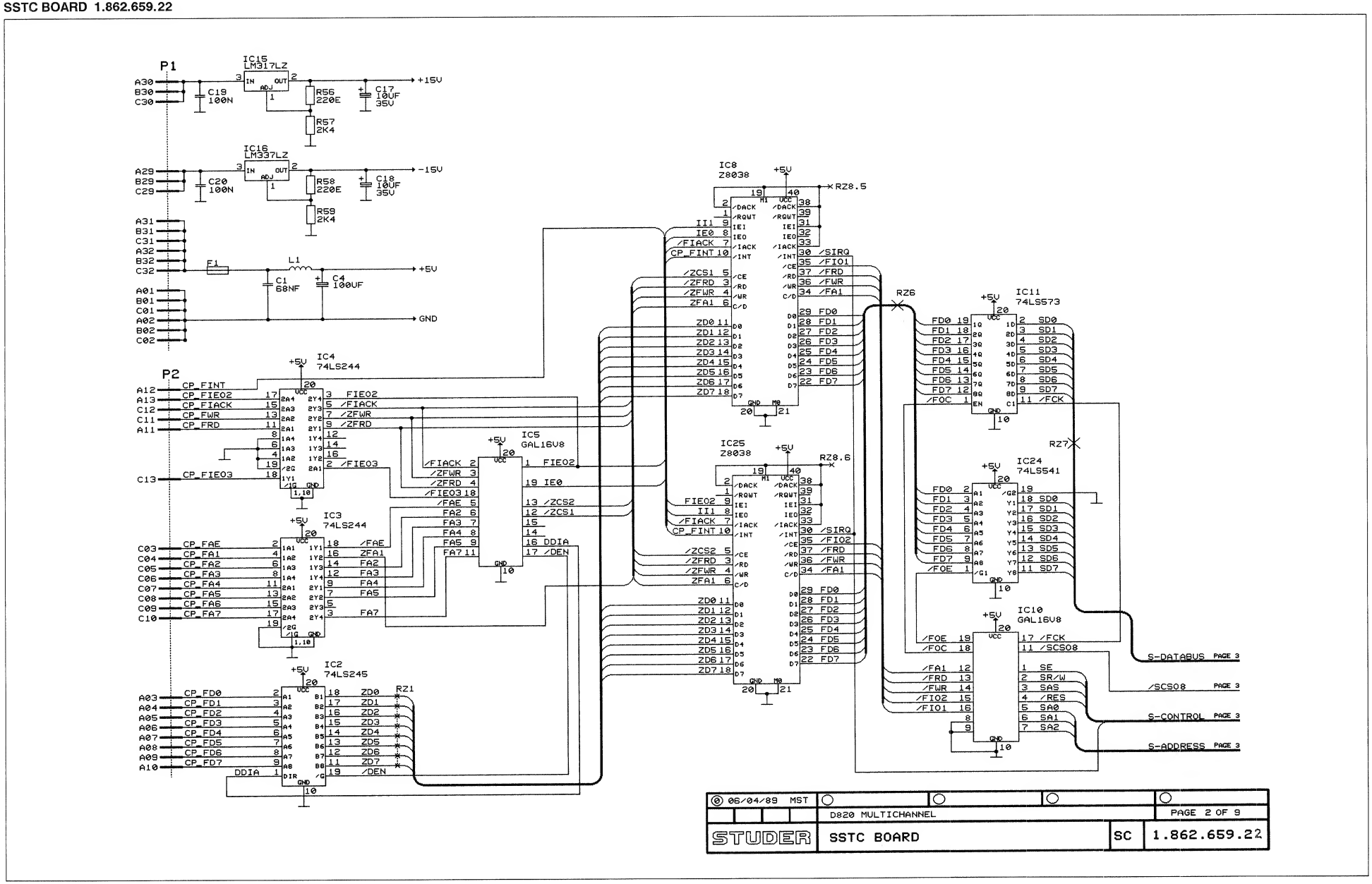

SSTC BOARD 1.862.659.22

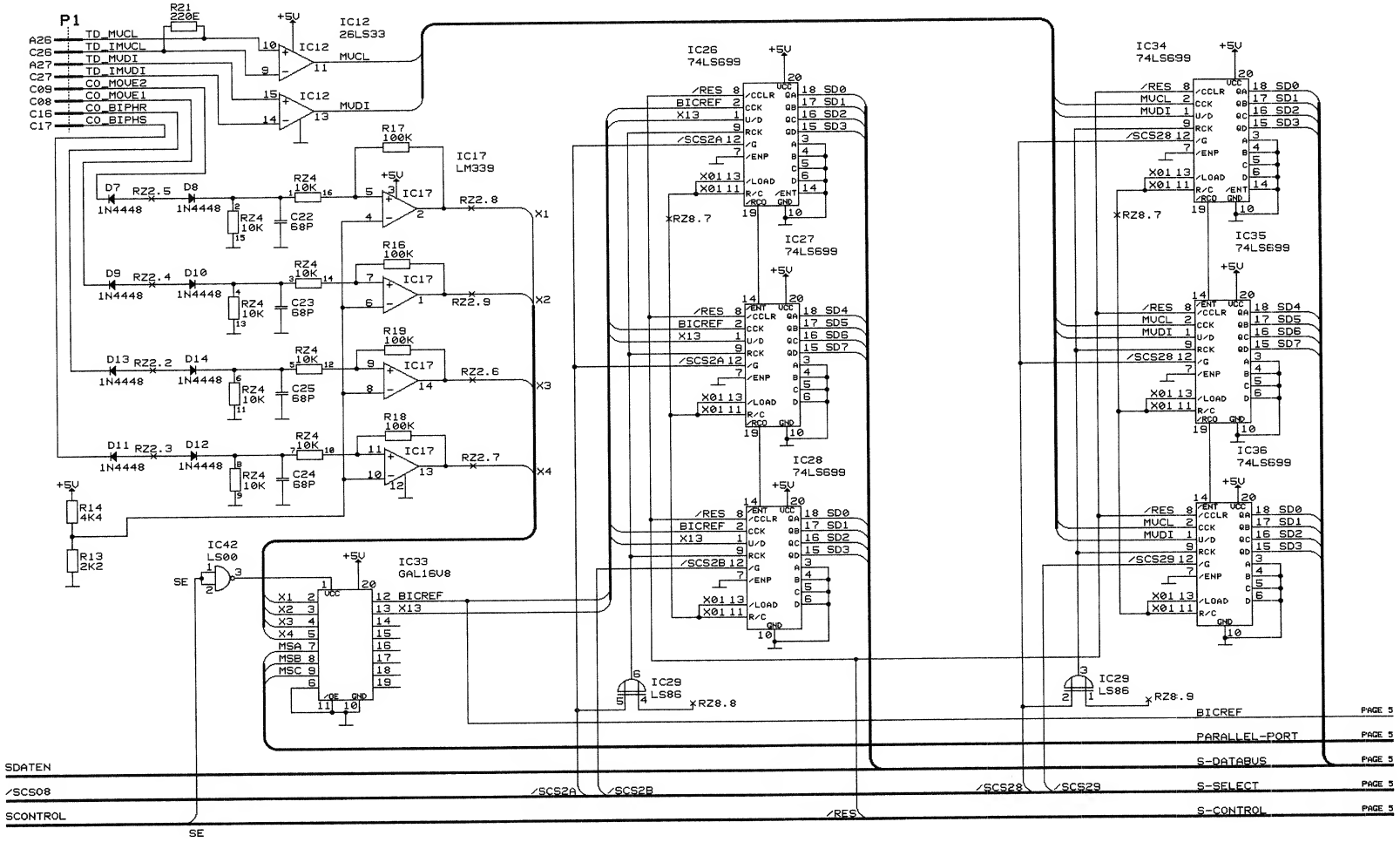

06/04/89 MST				
	D820 MULTICHANNEL		PAGE 3 OF 9	
STUDER	SSTC BOARD	SC	1.862.659.22	

SSTC BOARD 1.862.659.22

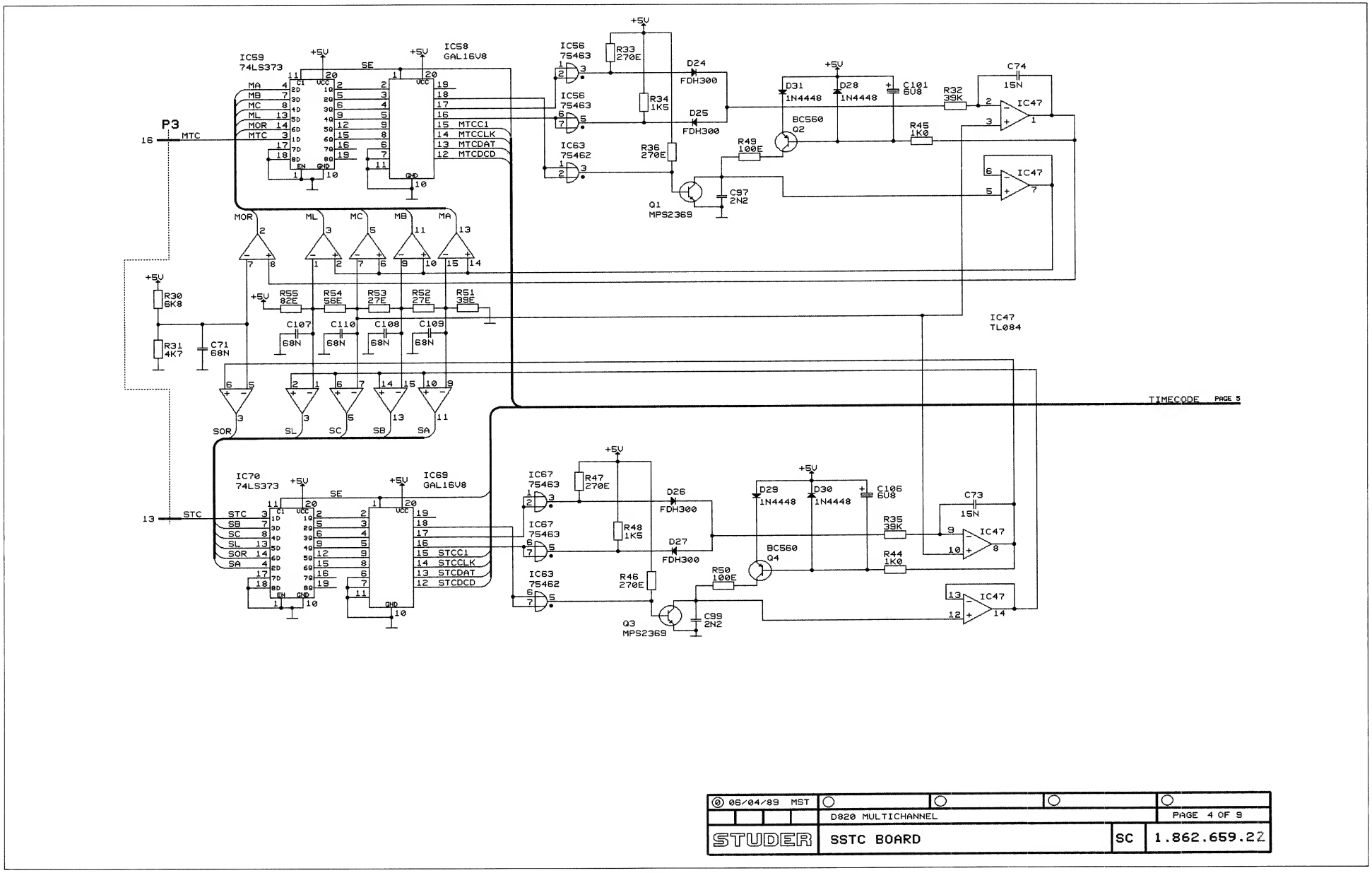

SSTC BOARD 1.862.659.22

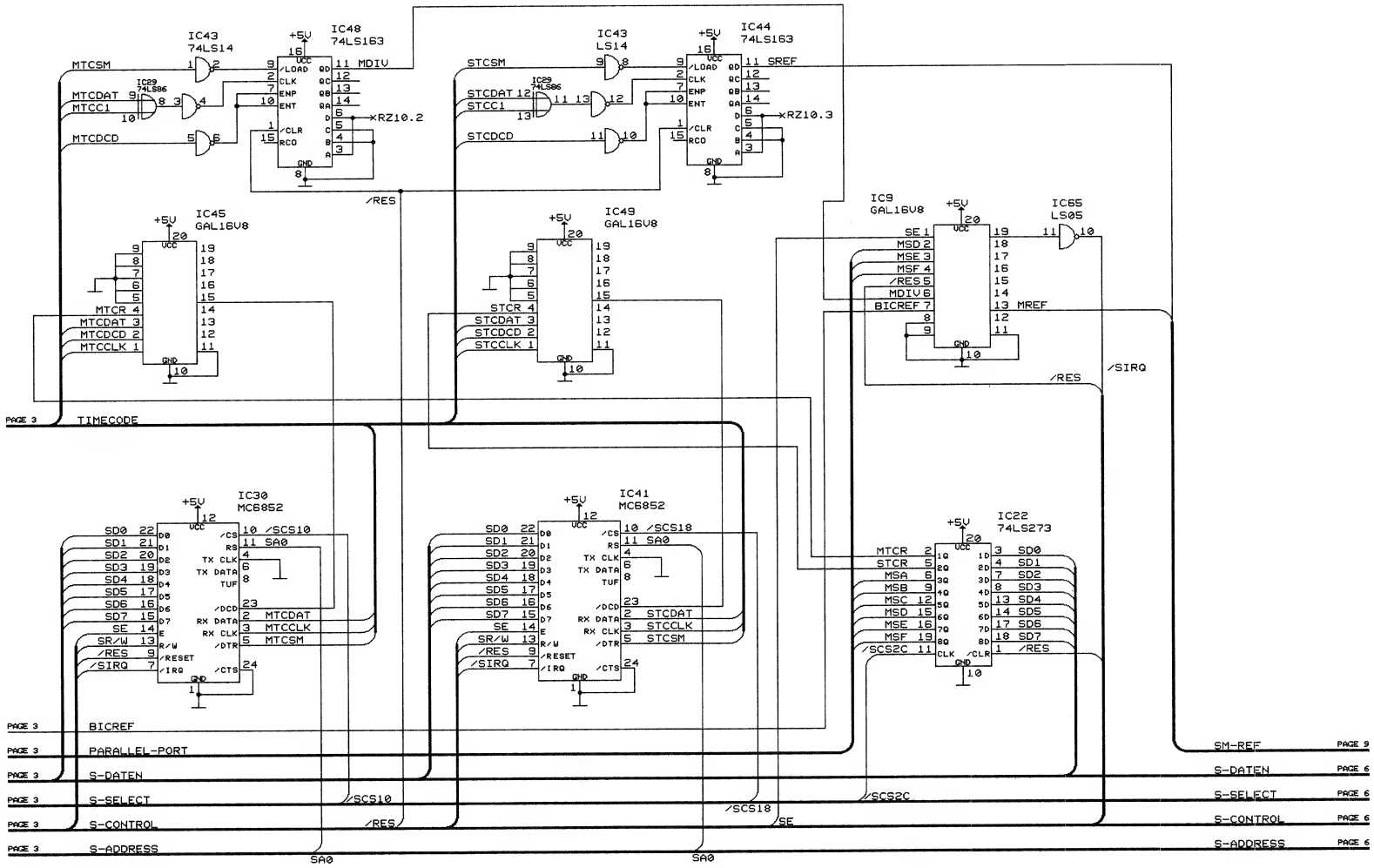

06/04/89 MST			
	D820 MULTICHANNEL		PAGE 5 OF 9
STUDER	SSTC BOARD	SC	1.862.659.22

SSTC BOARD 1.862.659.22

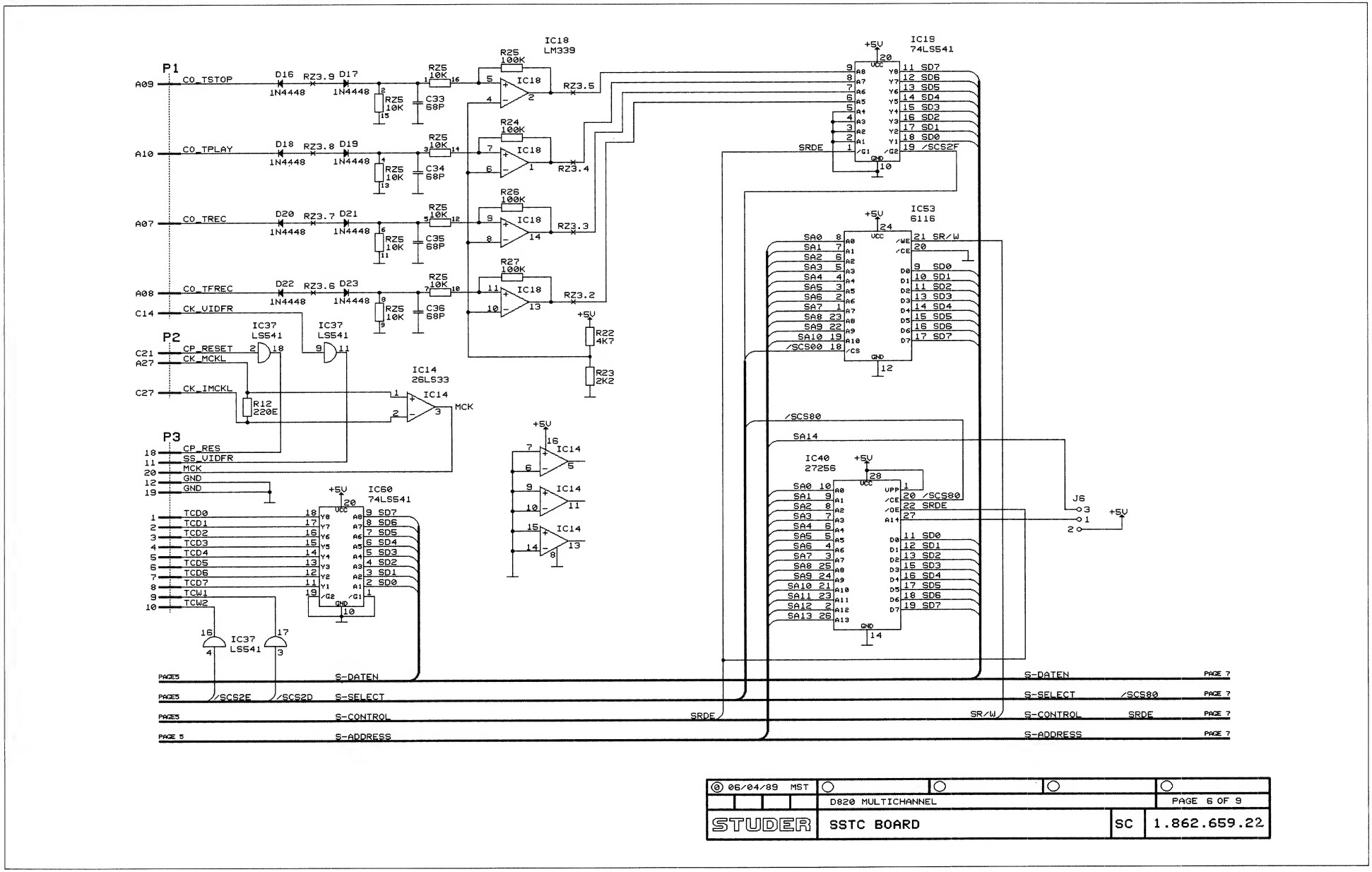

SSTC BOARD 1.862.659.22

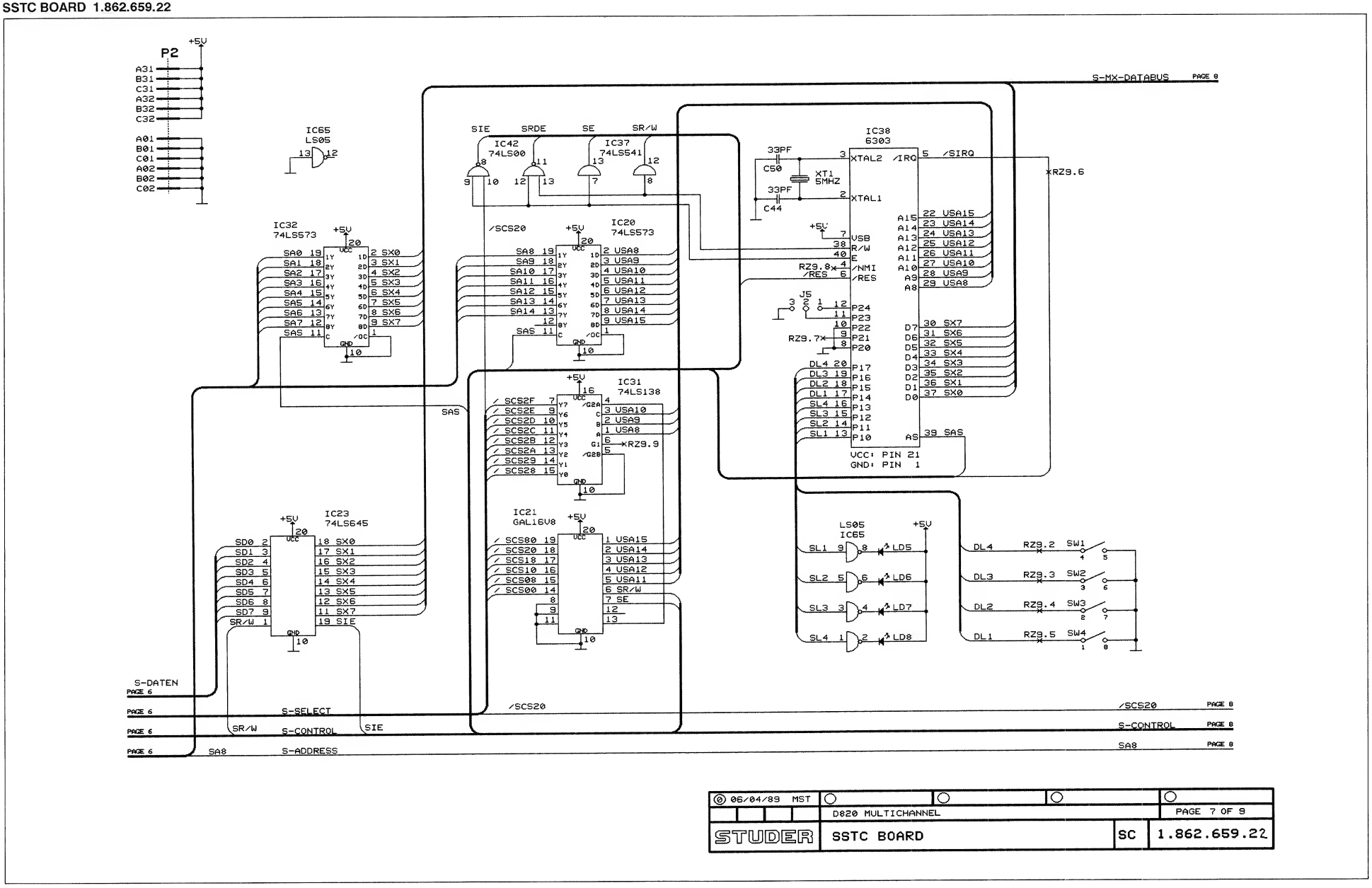

SSTC BOARD 1.862.659.22

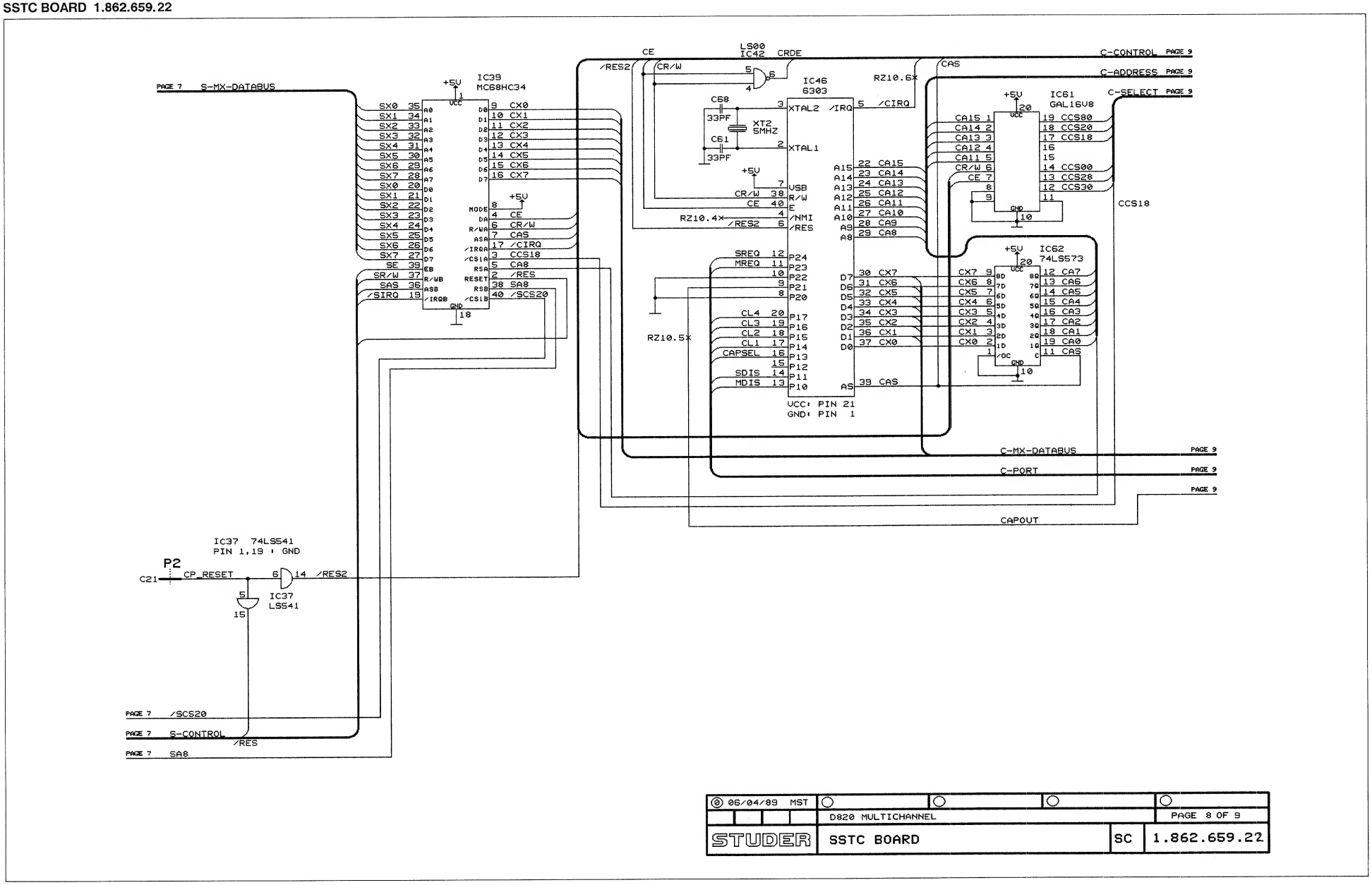

06/04/89 MST			
	D820 MULTICHANNEL		PAGE 8 OF 9
STUDER	SSTC BOARD	SC	1.862.659.22

SSTC BOARD 1.862.659.22

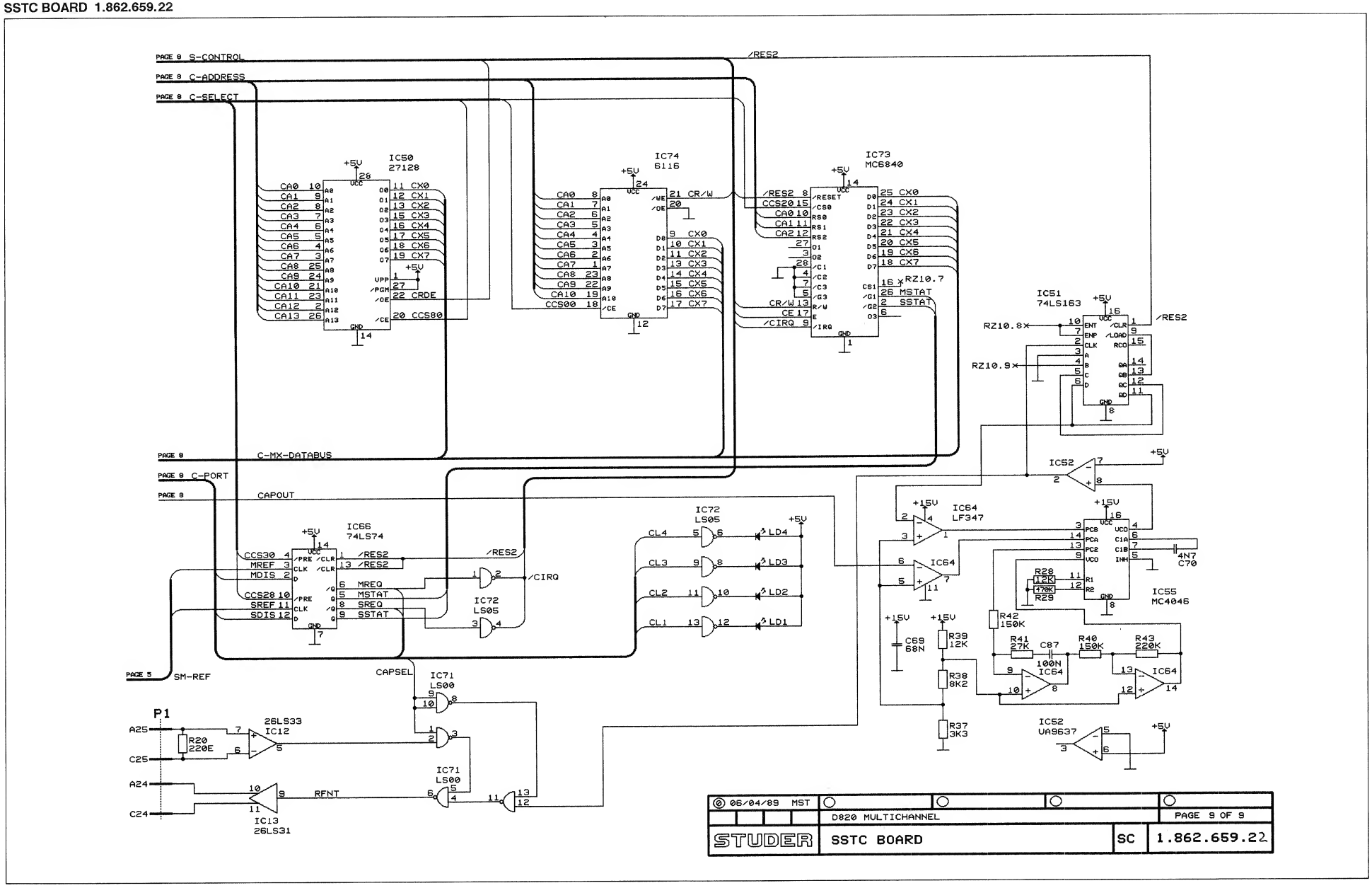

SSTC BOARD 1.862.659.22

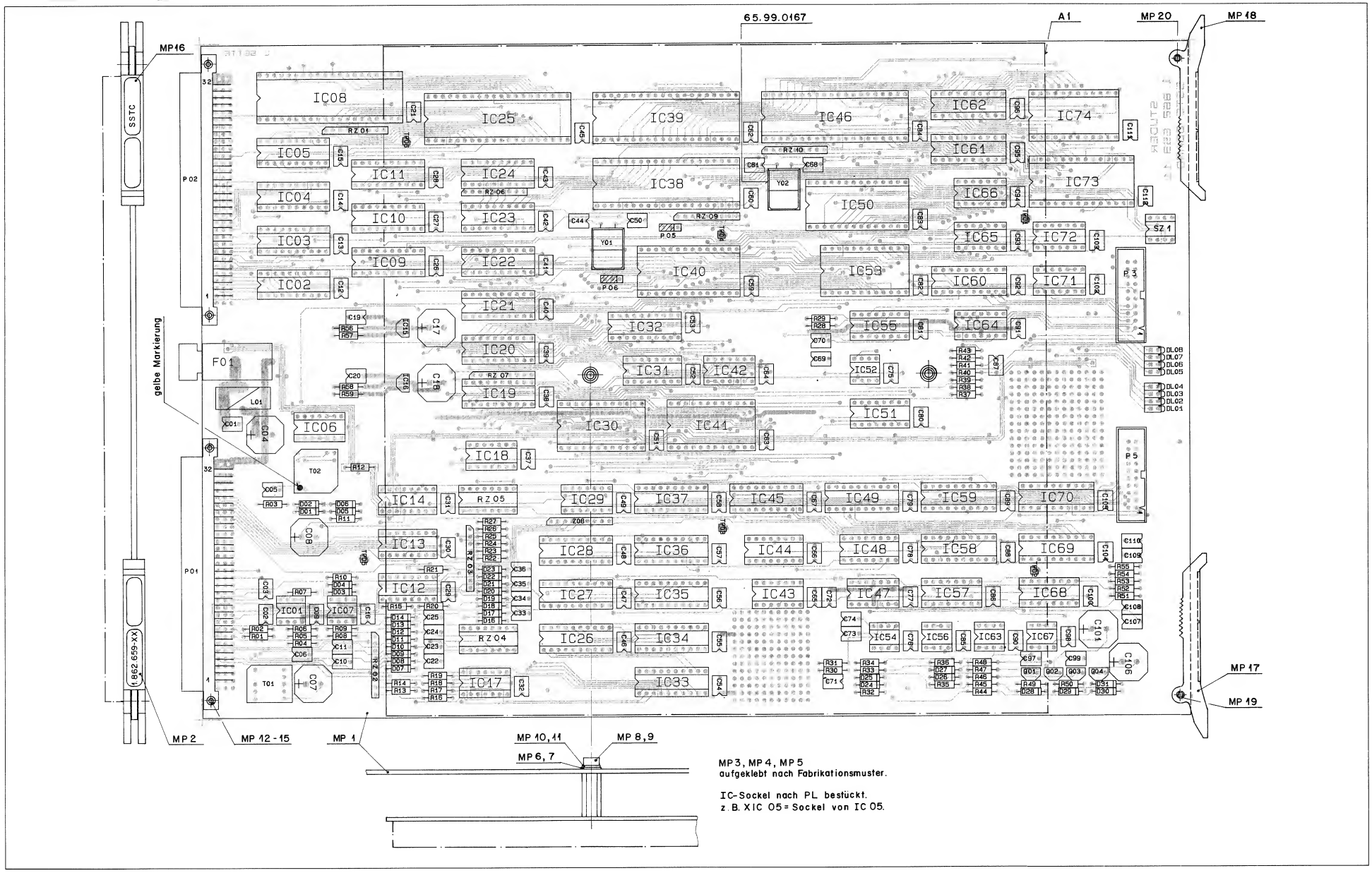

SSTC BOARD 1.862.659.22

IND.	POS.NO.	PART NO.	VALUE	SPECIFICATIONS / EQUIVALENT	MANUF.
	A.....1	1.862.685.21		TIME CODE BACKBAG	ST
	C.....1	59.06.0683	68 nF	10%, 63V, PETP	ANY
	C.....2	59.06.0683	68 nF	10%, 63V, PETP	ANY
	C.....3	59.06.0683	68 nF	10%, 63V, PETP	ANY
	C.....4	59.22.4101	100 uF	-20%, 16V, EL	ANY
	C.....5	59.06.0104	100 nF	10%, 63V, PETP	ANY
	C.....6	59.34.2390	39 pF	5%, CER	ANY
	C.....7	59.22.2471	470 uF	-20%, 6.3V, EL	ANY
	C.....8	59.30.4100	10 uF	20%, 16V, EL	ANY
	C.....9	59.06.0683	68 nF	10%, 63V, PETP	ANY
	C....10	59.06.0334	330 nF	10%, 63V, PETP	ANY
	C....11	59.06.0683	68 nF	10%, 63V, PETP	ANY
	C....12	59.06.0683	68 nF	10%, 63V, PETP	ANY
	C....13	59.06.0683	68 nF	10%, 63V, PETP	ANY
	C....14	59.06.0683	68 nF	10%, 63V, PETP	ANY
	C....15	59.06.0683	68 nF	10%, 63V, PETP	ANY
	C....16	59.06.0683	68 nF	10%, 63V, PETP	ANY
	C....17	59.30.6100	10 uF	-20%, 35V, EL	ANY
	C....18	59.30.6100	10 uF	-20%, 35V, EL	ANY
	C....19	59.06.0104	100 nF	10%, 63V, PETP	ANY
	C....20	59.06.0104	100 nF	10%, 63V, PETP	ANY
	C....21	59.06.0683	68 nF	10%, 63V, PETP	ANY
	C....22	59.32.1680	68 pF	10%, CER	ANY
	C....23	59.32.1680	68 pF	10%, CER	ANY
	C....24	59.32.1680	68 pF	10%, CER	ANY
	C....25	59.32.1680	68 pF	10%, CER	ANY
	C....26	59.06.0683	68 nF	10%, 63V, PETP	ANY
	C....27	59.06.0683	68 nF	10%, 63V, PETP	ANY
	C....28	59.06.0683	68 nF	10%, 63V, PETP	ANY
	C....29	59.06.0683	68 nF	10%, 63V, PETP	ANY
	C....30	59.06.0683	68 nF	10%, 63V, PETP	ANY
	C....31	59.06.0683	68 nF	10%, 63V, PETP	ANY
	C....32	59.06.0683	68 nF	10%, 63V, PETP	ANY
	C....33	59.32.1680	68 pF	10%, CER	ANY
	C....34	59.32.1680	68 pF	10%, CER	ANY
	C....35	59.32.1680	68 pF	10%, CER	ANY

IND.	POS.NO.	PART NO.	VALUE	SPECIFICATIONS / EQUIVALENT	MANUF.
	C....36	59.32.1680	68 pF	10%, CER	ANY
	C....37	59.06.0683	68 nF	10%, 63V, PETP	ANY
	C....38	59.06.0683	68 nF	10%, 63V, PETP	ANY
	C....39	59.06.0683	68 nF	10%, 63V, PETP	ANY
	C....40	59.06.0683	68 nF	10%, 63V, PETP	ANY
	C....41	59.06.0683	68 nF	10%, 63V, PETP	ANY
	C....42	59.06.0683	68 nF	10%, 63V, PETP	ANY
	C....43	59.06.0683	68 nF	10%, 63V, PETP	ANY
	C....44	59.32.1330	33 pF	10%, CER	ANY
	C....45	59.06.0683	68 nF	10%, 63V, PETP	ANY
	C....46	59.06.0683	68 nF	10%, 63V, PETP	ANY
	C....47	59.06.0683	68 nF	10%, 63V, PETP	ANY
	C....48	59.06.0683	68 nF	10%, 63V, PETP	ANY
	C....49	59.06.0683	68 nF	10%, 63V, PETP	ANY
	C....50	59.32.1330	33 pF	10%, CER	ANY
	C....51	59.06.0683	68 nF	10%, 63V, PETP	ANY
	C....52	59.06.0683	68 nF	10%, 63V, PETP	ANY
	C....53	59.06.0683	68 nF	10%, 63V, PETP	ANY
	C....54	59.06.0683	68 nF	10%, 63V, PETP	ANY
	C....55	59.06.0683	68 nF	10%, 63V, PETP	ANY
	C....56	59.06.0683	68 nF	10%, 63V, PETP	ANY
	C....57	59.06.0683	68 nF	10%, 63V, PETP	ANY
	C....58	59.06.0683	68 nF	10%, 63V, PETP	ANY
	C....59	59.06.0683	68 nF	10%, 63V, PETP	ANY
	C....60	59.06.0683	68 nF	10%, 63V, PETP	ANY
	C....61	59.32.1330	33 pF	10%, CER	ANY
	C....62	59.06.0683	68 nF	10%, 63V, PETP	ANY
	C....63	59.06.0683	68 nF	10%, 63V, PETP	ANY
	C....64	59.06.0683	68 nF	10%, 63V, PETP	ANY
	C....65	59.06.0683	68 nF	10%, 63V, PETP	ANY
	C....66	59.06.0683	68 nF	10%, 63V, PETP	ANY
	C....67	59.06.0683	68 nF	10%, 63V, PETP	ANY
	C....68	59.32.1330	33 pF	10%, CER	ANY
	C....69	59.06.0683	68 nF	10%, 63V, PETP	ANY
	C....70	59.06.0472	4.7 nF	10%, 63V, PETP	ANY
	C....71	59.06.0683	68 nF	10%, 63V, PETP	ANY
	C....72	59.06.0683	68 nF	10%, 63V, PETP	ANY

IND.	POS.NO.	PART NO.	VALUE	SPECIFICATIONS / EQUIVALENT	MANUF.
	C....73	59.06.0153	15 nF	10%, 63V, PETP	ANY
	C....74	59.06.0153	15 nF	10%, 63V, PETP	ANY
	C....75	59.06.0683	68 nF	10%, 63V, PETP	ANY
	C....76	59.06.0683	68 nF	10%, 63V, PETP	ANY
	C....77	59.06.0683	68 nF	10%, 63V, PETP	ANY
	C....78	59.06.0683	68 nF	10%, 63V, PETP	ANY
	C....79	59.06.0683	68 nF	10%, 63V, PETP	ANY
	C....80	59.06.0683	68 nF	10%, 63V, PETP	ANY
	C....81	59.06.0683	68 nF	10%, 63V, PETP	ANY
	C....82	59.06.0683	68 nF	10%, 63V, PETP	ANY
	C....83	59.06.0683	68 nF	10%, 63V, PETP	ANY
	C....84	59.06.0683	68 nF	10%, 63V, PETP	ANY
	C....85	59.06.0683	68 nF	10%, 63V, PETP	ANY
	C....86	59.06.0683	68 nF	10%, 63V, PETP	ANY
	C....87	59.06.0104	100 nF	10%, 63V, PETP	ANY
	C....88	59.06.0683	68 nF	10%, 63V, PETP	ANY
	C....89	59.06.0683	68 nF	10%, 63V, PETP	ANY
	C....90	59.06.0683	68 nF	10%, 63V, PETP	ANY
	C....91	59.06.0683	68 nF	10%, 63V, PETP	ANY
	C....92	59.06.0683	68 nF	10%, 63V, PETP	ANY
	C....93	59.06.0683	68 nF	10%, 63V, PETP	ANY
	C....94	59.06.0683	68 nF	10%, 63V, PETP	ANY
	C....95	59.06.0683	68 nF	10%, 63V, PETP	ANY
	C....96	59.06.0683	68 nF	10%, 63V, PETP	ANY
	C....97	59.06.0222	2.2 nF	10%, 63V, PETP	ANY
	C....98	59.06.0683	68 nF	10%, 63V, PETP	ANY
	C....99	59.06.0222	2.2 nF	10%, 63V, PETP	ANY
	C...100	59.06.0683	68 nF	10%, 63V, PETP	ANY
	C...101	59.30.4689	6.8 uF	20%, 16V, EL	ANY
	C...102	59.06.0683	68 nF	10%, 63V, PETP	ANY
	C...103	59.06.0683	68 nF	10%, 63V, PETP	ANY
	C...104	59.06.0683	68 nF	10%, 63V, PETP	ANY
	C...105	59.06.0683	68 nF	10%, 63V, PETP	ANY
	C...106	59.30.4689	6.8 uF	20%, 16V, EL	ANY
	C...107	59.06.0683	68 nF	10%, 63V, PETP	ANY
	C...108	59.06.0683	68 nF	10%, 63V, PETP	ANY
	C...109	59.06.0683	68 nF	10%, 63V, PETP	ANY

IND.	POS.NO.	PART NO.	VALUE	SPECIFICATIONS / EQUIVALENT	MANUF.
	C...110	59.06.0683	68 nF	10%, 63V, PETP	ANY
	C...111	59.06.0683	68 nF	10%, 63V, PETP	ANY
	C...112	59.06.0683	68 nF	10%, 63V, PETP	ANY
	D.....1	50.04.0125		1N 4448, Si	ANY
	D.....2	50.04.0125		1N 4448, Si	ANY
	D.....3	50.04.0125		1N 4448, Si	ANY
	D.....4	50.04.0125		1N 4448, Si	ANY
	D.....5	50.04.0125		1N 4448, Si	ANY
	D.....6	50.04.0125		1N 4448, Si	ANY
	D.....7	50.04.0125		1N 4448, Si	ANY
	D.....8	50.04.0125		1N 4448, Si	ANY
	D.....9	50.04.0125		1N 4448, Si	ANY
	D....10	50.04.0125		1N 4448, Si	ANY
	D....11	50.04.0125		1N 4448, Si	ANY
	D....12	50.04.0125		1N 4448, Si	ANY
	D....13	50.04.0125		1N 4448, Si	ANY
	D....14	50.04.0125		1N 4448, Si	ANY
	D....16	50.04.0125		1N 4448, Si	ANY
	D....17	50.04.0125		1N 4448, Si	ANY
	D....18	50.04.0125		1N 4448, Si	ANY
	D....19	50.04.0125		1N 4448, Si	ANY
	D....20	50.04.0125		1N 4448, Si	ANY
	D....21	50.04.0125		1N 4448, Si	ANY
	D....22	50.04.0125		1N 4448, Si	ANY
	D....23	50.04.0125		1N 4448, Si	ANY
	D....24	50.04.0134		FDH 300, 1N 3595	Fc
	D....25	50.04.0134		FDH 300, 1N 3595	Fc
	D....26	50.04.0134		FDH 300, 1N 3595	Fc
	D....27	50.04.0134		FDH 300, 1N 3595	Fc
	D....28	50.04.0125		1N 4448, SI	ANY
	D....29	50.04.0125		1N 4448, SI	ANY
	D....30	50.04.0125		1N 4448, SI	ANY
	D....31	50.04.0125		1N 4448, SI	ANY
	DL....1	50.04.2107		LED red, 555-2007	Di
	DL....2	50.04.2107		LED red, 555-2007	Di

IND.	POS.NO.	PART NO.	VALUE	SPECIFICATIONS / EQUIVALENT	MANUF.
	DL....3	50.04.2107		LED red, 555-2007	Di
	DL....4	50.04.2107		LED red, 555-2007	Di
	DL....5	50.04.2107		LED red, 555-2007	Di
	DL....6	50.04.2107		LED red, 555-2007	Di
	DL....7	50.04.2107		LED red, 555-2007	Di
	DL....8	50.04.2107		LED red, 555-2007	Di
	F.....1	51.99.0133		MINIFUSE 7A	ANY
	IC....1	50.11.0114		LM 311 N	ANY
	IC....2	50.06.0245		74 LS 245 N	ANY
	IC....3	50.06.0244		74 LS 244 N	ANY
	IC....4	50.06.0244		74 LS 244 N	ANY
	IC....5	50.18.0100		GAL 16V8-25LP (SW 1.862.962.20)	ANY
	IC....6	50.17.1132		74 HC 132	ANY
	IC....7	50.09.0103		TL 071 CP	ANY
	IC....8	50.16.0118		Z 8038 PS FIFO Port	ANY
	IC....9	50.18.0100		GAL 16V8-25LP (SW 1.862.966.20)	ANY
	IC...10	50.18.0100		GAL 16V8-25LP (SW 1.862.960.20)	ANY
	IC...11	50.06.1573		74 LS 573 N	ANY
	IC...12	50.15.0109		AM 26 LS 33 PC	ANY
	IC...13	50.15.0108		AM 26 LS 31 PC	ANY
	IC...14	50.15.0109		AM 26 LS 33 PC	ANY
	IC...15	50.10.0108		LM 317 LZ	ANY
	IC...16	50.10.0109		LM 337 LZ	ANY
	IC...17	50.11.0104		LM 339 N	ANY
	IC...18	50.11.0104		LM 339 N	ANY
	IC...19	50.06.0541		74 LS 541 N	ANY
	IC...20	50.06.1573		74 ALS 573 N	ANY
	IC...21	50.18.0100		GAL 16V8-25LP (SW 1.862.961.20)	ANY
	IC...22	50.06.0273		74 LS 273 N	ANY
	IC...23	50.06.0645		74 LS 645 N	ANY
	IC...24	50.06.0541		74 LS 541 N	ANY
	IC...25	50.16.0118		Z 8038 PS FIFO Port	ANY
	IC...26	50.06.0699		74 LS 699 N	ANY
	IC...27	50.06.0699		74 LS 699 N	ANY
	IC...28	50.06.0699		74 LS 699 N	ANY

IND.	POS.NO.	PART NO.	VALUE	SPECIFICATIONS / EQUIVALENT	MANUF.
	IC....29	50.06.0086		74 LS 86 N	ANY
	IC....30	50.16.0114		MC 68A52 P SSDA	ANY
	IC....31	50.06.0138		74 LS 138 N	ANY
	IC....32	50.06.1573		74 ALS 573 N	ANY
	IC....33	50.18.0100		GAL 16V8-25LP (SW 1.862.963.20)	ANY
	IC....34	50.06.0699		74 LS 699 N	ANY
	IC....35	50.06.0699		74 LS 699 N	ANY
	IC....36	50.06.0699		74 LS 699 N	ANY
	IC....37	50.06.0541		74 LS 541 N	ANY
	IC....38	50.16.0107		MC 6803-1 8BIT MCU	ANY
	IC....39	50.14.1701		MC 68HC54 P Dual Port RAM	ANY
	IC....40	50.14.0125		EPROM 27128 (SW 1.862.967.21)	ANY
	IC....41	50.16.0114		MC 68A52 P SSDA	ANY
	IC....42	50.06.0020		74 LS 00 N	ANY
	IC....43	50.06.0014		74 LS 14 N	ANY
	IC....44	50.06.0163		74 LS 163 N	ANY
	IC....45	50.18.0100		GAL 16V8-25LP (SW 1.862.965.20)	ANY
	IC....46	50.16.0107		MC 6803-1 8BIT MCU	ANY
	IC....47	50.09.0104		LF 347 N	ANY
	IC....48	50.06.0163		74 LS 163 N	ANY
	IC....49	50.18.0100		GAL 16V8-25LP (SW 1.862.965.20)	ANY
	IC....50	50.14.0125		EPROM 27128 (SW 1.862.968.20)	ANY
	IC....51	50.06.0163		74 LS 163 N	ANY
	IC....52	50.15.0114		uA 9637 ACP	ANY
	IC....53	50.14.0107		HM 6116-LP4 SRAM, 2K x 8, 200 NSEC	ANY
	IC....54	50.15.0114		uA 9637 ACP	ANY
	IC....55	50.07.0046		MC 14046 BCP	ANY
	IC....56	50.05.0203		75463 P	ANY
	IC....57	50.15.0104		MC 3486 P	ANY
	IC....58	50.18.0100		GAL 16V8-25LP (SW 1.862.964.20)	ANY
	IC....59	50.06.0373		74 LS 373 N	ANY
	IC....60	50.06.0541		74 LS 541 N	ANY
	IC....61	50.18.0100		GAL 16V8-25LP (SW 1.862.961.20)	ANY
	IC....62	50.06.1573		74 ALS 573 N	ANY
	IC....63	50.05.0227		75462 P	ANY
	IC....64	50.09.0104		LF 347 N	ANY
	IC....65	50.06.0005		74 LS 05 N	ANY

IND.	POS.NO.	PART NO.	VALUE	SPECIFICATIONS / EQUIVALENT	MANUF.
	IC...66	50.06.0074		74 LS 74 AN	ANY
	IC...67	50.05.0203		75463 P	ANY
	IC...68	50.15.0104		MC 3486 P	ANY
	IC...69	50.18.0100		GAL 16V8-25LP (SW 1.862.964.20)	ANY
	IC...70	50.06.0373		74 LS 373 N	ANY
	IC...71	50.06.0005		74 LS 05 N	ANY
	IC...73	50.16.0113	Timer	MC 68A40 P	ANY
	IC...74	50.14.0107	SRAM, 2K x 8, 200 nSEC	HM 6116-LP4	ANY
	J.....5	54.01.0020		STIFTLEISTE ** QTY 3 **********	ANY
	J.....6	54.01.0020		STIFTLEISTE ** QTY 3 **********	ANY
	JP....5	54.01.0021		JUMPER	ANY
	JP....6	54.01.0021		JUMPER	ANY
	L.....1	62.03.0040	100 uH	5 A, FILTER	ANY
	MP....1	1.862.659.11		SSTC-PCB	ANY
	MP....2	1.862.659.01		NR-ETIKETTE	ANY
	MP....3	1.010.130.51		TEXT-ETIK. 5x20 (F7.00A)	ST
	MP....4	1.101.001.20		TEXT-ETIK. 5x20 HARDWARE -20	St
	MP....5	49.01.0108		ESE-WARNSCHILD	ANY
	MP....6	23.01.1032		U-SCHEIBE D 3.2/ 6 x0.5	ANY
	MP....7	23.01.1032		U-SCHEIBE D 3.2/ 6 x0.5	ANY
	MP....8	21.51.8355		LIN-SCHR. IS / NI / M 3 x 8	ANY
	MP....9	21.51.8355		LIN-SCHR. IS / NI / M 3 x 8	ANY
	MP...10	24.16.1030		RIPPENSCHEIBE A, D 3.2	ANY
	MP...11	24.16.1030		RIPPENSCHEIBE A, D 3.2	ANY
	MP...12	28.99.0119		RIVETING NUT, D 2.5 x 0.15 x 10	ANY
	MP...13	28.99.0119		RIVETING NUT, D 2.5 x 0.15 x 10	ANY
	MP...14	28.99.0119		RIVETING NUT, D 2.5 x 0.15 x 10	ANY
	MP...15	28.99.0119		RIVETING NUT, D 2.5 x 0.15 x 10	ANY
	MP...16	1.862.659.02		LABEL 'SSTC'	ST
	MP...17	1.862.650.05		AUSWERFERHEBEL	ST
	MP...18	1.862.650.05		AUSWERFERHEBEL	ST
	MP...19	1.862.650.05		AUSWERFERSTIFT	ST

IND.	POS.NO.	PART NO.	VALUE	SPECIFICATIONS / EQUIVALENT	MANUF.
	MP...20	1.862.650.05		AUSWERFERSTIFT	ST
	P.....1	54.01.0358		Euro Card connector 3x32	ANY
	P.....2	54.01.0358		Euro Card connector 3x32	ANY
	P.....3	54.14.2008		PCB connector 20 p.	ANY
	P.....5	54.14.2008		PCB connector 20 p.	ANY
	Q.....1	50.03.0508		KPS 2369	ANY
	Q.....2	50.03.0496		BC 560	ANY
	Q.....3	50.03.0508		KPS 2369	ANY
	Q.....4	50.03.0496		BC 560	ANY
	R.....1	57.11.3472	4.7 k	1%, 0207 / MF	ANY
	R.....2	57.11.3472	4.7 k	1%, 0207 / MF	ANY
	R.....3	57.11.3101	100	1%, 0207 / MF	ANY
	R.....4	57.11.3103	10 k	1%, 0207 / MF	ANY
	R.....5	57.11.3151	150	1%, 0207 / MF	ANY
	R.....6	57.11.3332	3.3 k	1%, 0207 / MF	ANY
	R.....7	57.11.3102	1 k	1%, 0207 / MF	ANY
	R.....8	57.11.3390	39	1%, 0207 / MF	ANY
	R....09	57.11.3182	1.8 k	1%, 0207 / MF	ANY
	R....10	57.11.3272	2.7 k	1%, 0207 / MF	ANY
	R....11	57.11.3270	27	1%, 0207 / MF	ANY
	R....12	57.11.3221	220	1%, 0207 / MF	ANY
	R....13	57.11.3222	2.2 k	1%, 0207 / MF	ANY
	R....14	57.11.3472	4.7 k	1%, 0207 / MF	ANY
	R....15	57.11.3221	220	1%, 0207 / MF	ANY
	R....16	57.11.3104	100 k	1%, 0207 / MF	ANY
	R....17	57.11.3104	100 k	1%, 0207 / MF	ANY
	R....18	57.11.3104	100 k	1%, 0207 / MF	ANY
	R....19	57.11.3104	100 k	1%, 0207 / MF	ANY
	R....20	57.11.3221	220	1%, 0207 / MF	ANY
	R....21	57.11.3221	220	1%, 0207 / MF	ANY
	R....22	57.11.3472	4.7 k	1%, 0207 / MF	ANY
	R....23	57.11.3222	2.2 k	1%, 0207 / MF	ANY
	R....24	57.11.3104	100 k	1%, 0207 / MF	ANY
	R....25	57.11.3104	100 k	1%, 0207 / MF	ANY

IND.	POS.NO.	PART NO.	VALUE	SPECIFICATIONS / EQUIVALENT	MANUF.
	R....26	57.11.3104	100 k	1%, 0207 / MF	ANY
	R....27	57.11.3104	100 k	1%, 0207 / MF	ANY
	R....28	57.11.3123	12 k	1%, 0207 / MF	ANY
	R....29	57.11.3474	470 k	1%, 0207 / MF	ANY
	R....30	57.11.3682	6.8 k	1%, 0207 / MF	ANY
	R....31	57.11.3472	4.7 k	1%, 0207 / MF	ANY
	R....32	57.11.3393	39 k	1%, 0207 / MF	ANY
	R....33	57.11.3271	270	1%, 0207 / MF	ANY
	R....34	57.11.3152	1.5 k	1%, 0207 / MF	ANY
	R....35	57.11.3393	39 k	1%, 0207 / MF	ANY
	R....36	57.11.3271	270	1%, 0207 / MF	ANY
	R....37	57.11.3332	3.3 k	1%, 0207 / MF	ANY
	R....38	57.11.3822	8.2 k	1%, 0207 / MF	ANY
	R....39	57.11.3123	12 k	1%, 0207 / MF	ANY
	R....40	57.11.3154	150 k	1%, 0207 / MF	ANY
	R....41	57.11.3273	27 k	1%, 0207 / MF	ANY
	R....42	57.11.3154	150 k	1%, 0207 / MF	ANY
	R....43	57.11.3224	220 k	1%, 0207 / MF	ANY
	R....44	57.11.3102	1 k	1%, 0207 / MF	ANY
	R....45	57.11.3102	1 k	1%, 0207 / MF	ANY
	R....46	57.11.3271	270	1%, 0207 / MF	ANY
	R....47	57.11.3271	270	1%, 0207 / MF	ANY
	R....48	57.11.3152	1.5 k	1%, 0207 / MF	ANY
	R....49	57.11.3101	100	1%, 0207 / MF	ANY
	R....50	57.11.3101	100	1%, 0207 / MF	ANY
	R....51	57.11.3390	39	1%, 0207 / MF	ANY
	R....52	57.11.3270	27	1%, 0207 / MF	ANY
	R....53	57.11.3270	27	1%, 0207 / MF	ANY
	R....54	57.11.3560	56	1%, 0207 / MF	ANY
	R....55	57.11.3820	82	1%, 0207 / MF	ANY
	R....56	57.11.3221	220	1%, 0207 / MF	ANY
	R....57	57.11.3242	2.4 k	1%, 0207 / MF	ANY
	R....58	57.11.3221	220	1%, 0207 / MF	ANY
	R....59	57.11.3242	2.4 k	1%, 0207 / MF	ANY
	RZ....1	57.88.4332	8*3.3k	2%, 0.25W SIP	ANY
	RZ....2	57.88.4332	8*3.3k	2%, 0.25W SIP	ANY

IND.	POS.NO.	PART NO.	VALUE	SPECIFICATIONS / EQUIVALENT	MANUF.
	RZ....3	57.88.4332	8*3.3k	2%, 0.25W SIP	ANY
	RZ....4	57.88.3103	8* 10k	2%, 0.25W DIP	ANY
	RZ....5	57.88.3103	8* 10k	2%, 0.25W DIP	ANY
	RZ....6	57.88.4332	8*3.3k	2%, 0.25W SIP	ANY
	RZ....7	57.88.4332	8*3.3k	2%, 0.25W SIP	ANY
	RZ....8	57.88.4332	8*3.3k	2%, 0.25W SIP	ANY
	RZ....9	57.88.4332	8*3.3k	2%, 0.25W SIP	ANY
	RZ...10	57.88.4332	8*3.3k	2%, 0.25W SIP	ANY
	SZ....1	55.01.0164	4 * A	DIL Switch	ANY
	T.....1	1.022.409.00		Trafo	St
	T.....2	1.022.215.00		TIME CODE OUTPUT TRANSFORMER	St
	TP....1	54.02.0320		SOLDERING PIN	ANY
	TP....2	54.02.0320		SOLDERING PIN	ANY
	TP....3	54.02.0320		SOLDERING PIN	ANY
	TP....4	54.02.0320		SOLDERING PIN	ANY
	TP....5	54.02.0320		SOLDERING PIN	ANY
	TP....6	54.02.0320		SOLDERING PIN	ANY
	XIC...5	53.03.0165		DIL 20-POL, LOET	ANY
	XIC...8	53.03.0172		DIL 40-POL, LOET	ANY
	XIC...9	53.03.0165		DIL 20-POL, LOET	ANY
	XIC..10	53.03.0165		DIL 20-POL, LOET	ANY
	XIC..21	53.03.0165		DIL 20-POL, LOET	ANY
	XIC..25	53.03.0172		DIL 40-POL, LOET	ANY
	XIC..30	53.03.0169		DIL 24-POL, LOET	ANY
	XIC..33	53.03.0165		DIL 20-POL, LOET	ANY
	XIC..38	53.03.0172		DIL 40-POL, LOET	ANY
	XIC..39	53.03.0172		DIL 40-POL, LOET	ANY
	XIC..40	53.03.0173		DIL 28-POL, LOET	ANY
	XIC..41	53.03.0169		DIL 24-POL LOET	ANY
	XIC..45	53.03.0165		DIL 20-POL, LOET	ANY
	XIC..46	53.03.0172		DIL 40-POL, LOET	ANY
	XIC..49	53.03.0165		DIL 20-POL, LOET	ANY
	XIC..50	53.03.0173		DIL 28-POL, LOET	ANY

IND.	POS.NO.	PART NO.	VALUE	SPECIFICATIONS / EQUIVALENT	MANUF.
	XIC..53	53.03.0169		DIL 24-POL LOET	ANY
	XIC..58	53.03.0165		DIL 20-POL, LOET	ANY
	XIC..61	53.03.0165		DIL 20-POL, LOET	ANY
	XIC..69	53.03.0165		DIL 20-POL, LOET	ANY
	XIC..73	53.03.0173		DIL 28-POL, LOET	ANY
	XIC..74	53.03.0169		DIL 24-POL LOET	ANY
	Y.....1	89.01.0560	4.9152 MHz	par. resonance, Rs < 100 ohm	ANY
	Y.....2	89.01.0560	4.9152 MHz	par. resonance, Rs < 100 ohm	ANY

REMARKS:

MANUFACTURERS : Di = Dialco, Fc = Fairchild, Hi = Hitachi, Lat = Lattice
MOT = MOTOROLA, NS = NATIONAL SEMICONDUCTORS
St = Studer, Zi = Zilog

ORIG 91/02/15

BLOCK DIAGRAM CLOCK BOARD

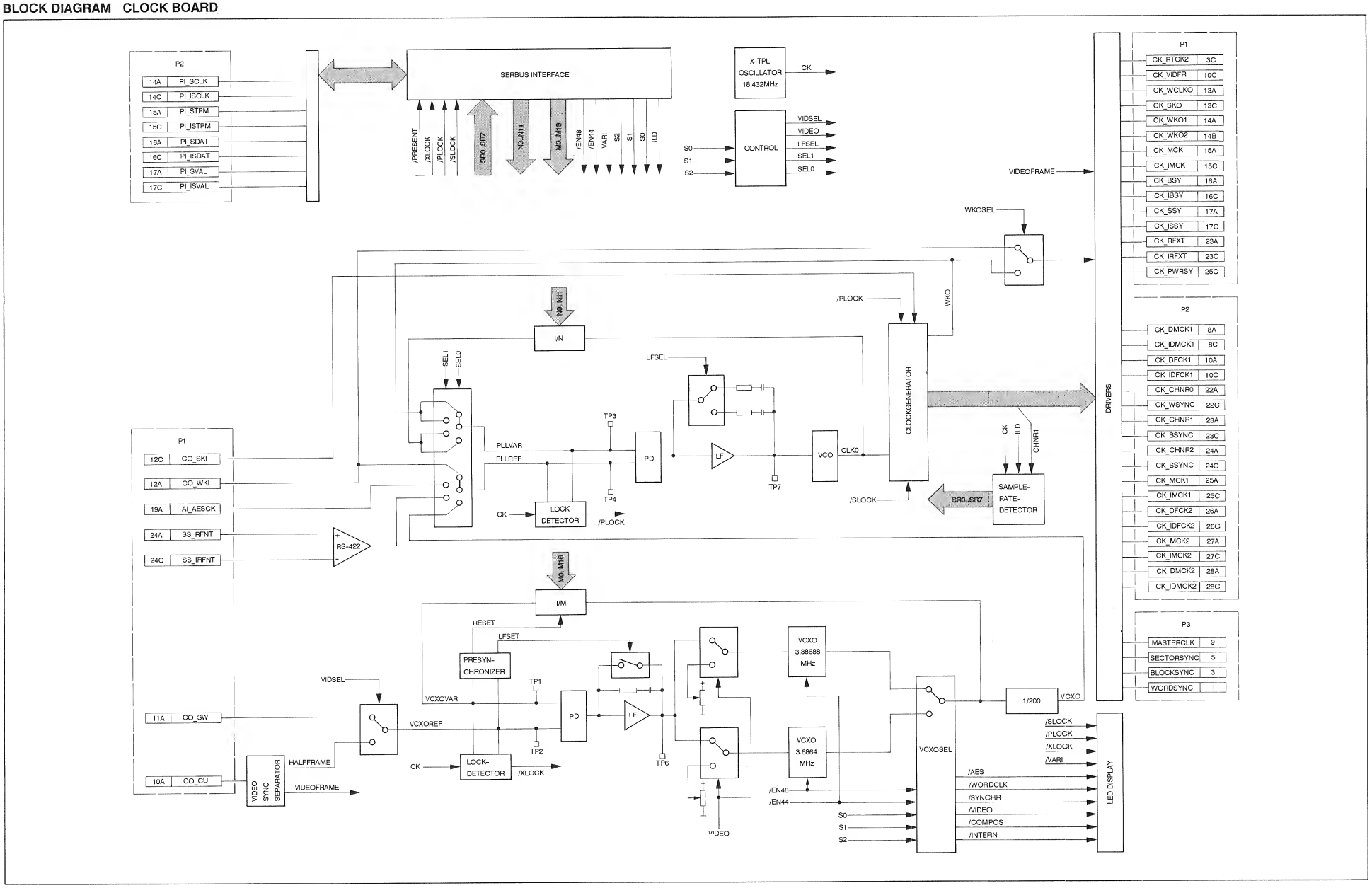

CLOCK BOARD 1.862.660.22

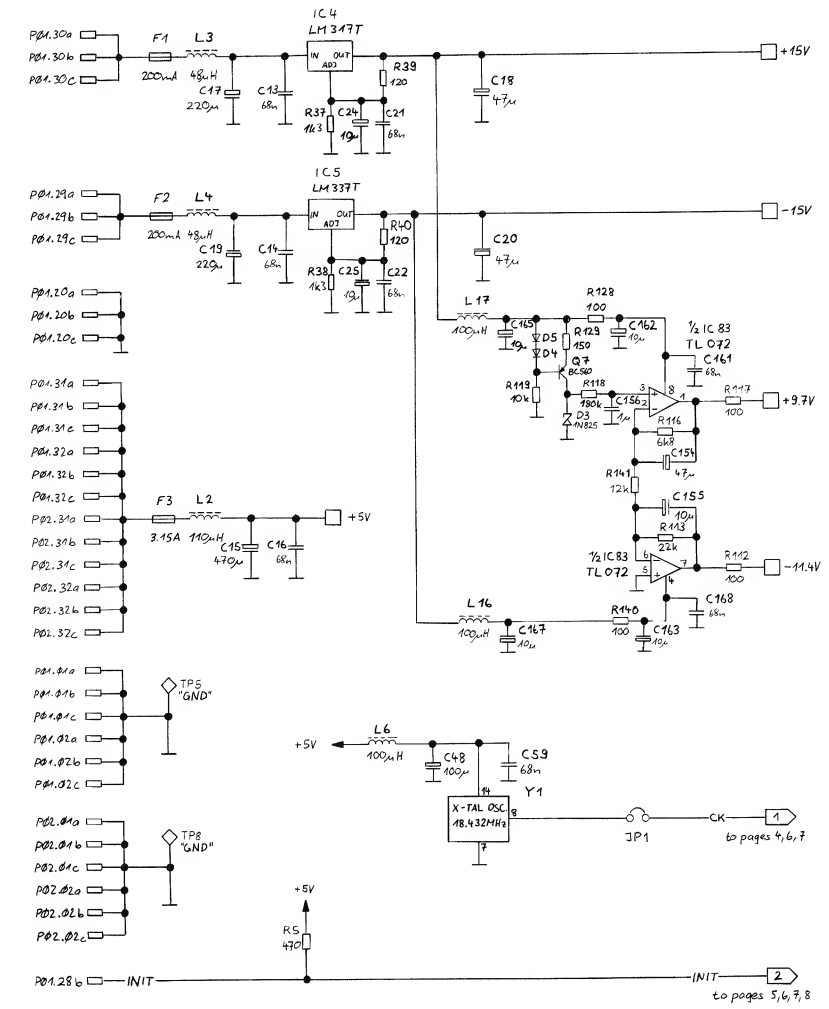

0 7.3.89 A.Bonan			PAGE 1 OF 11
	D820 MCH CLOCK-BOARD		
STUDER	POWERSUPPLY	SC	1.862.660.22

CLOCK BOARD 1.862.660.22

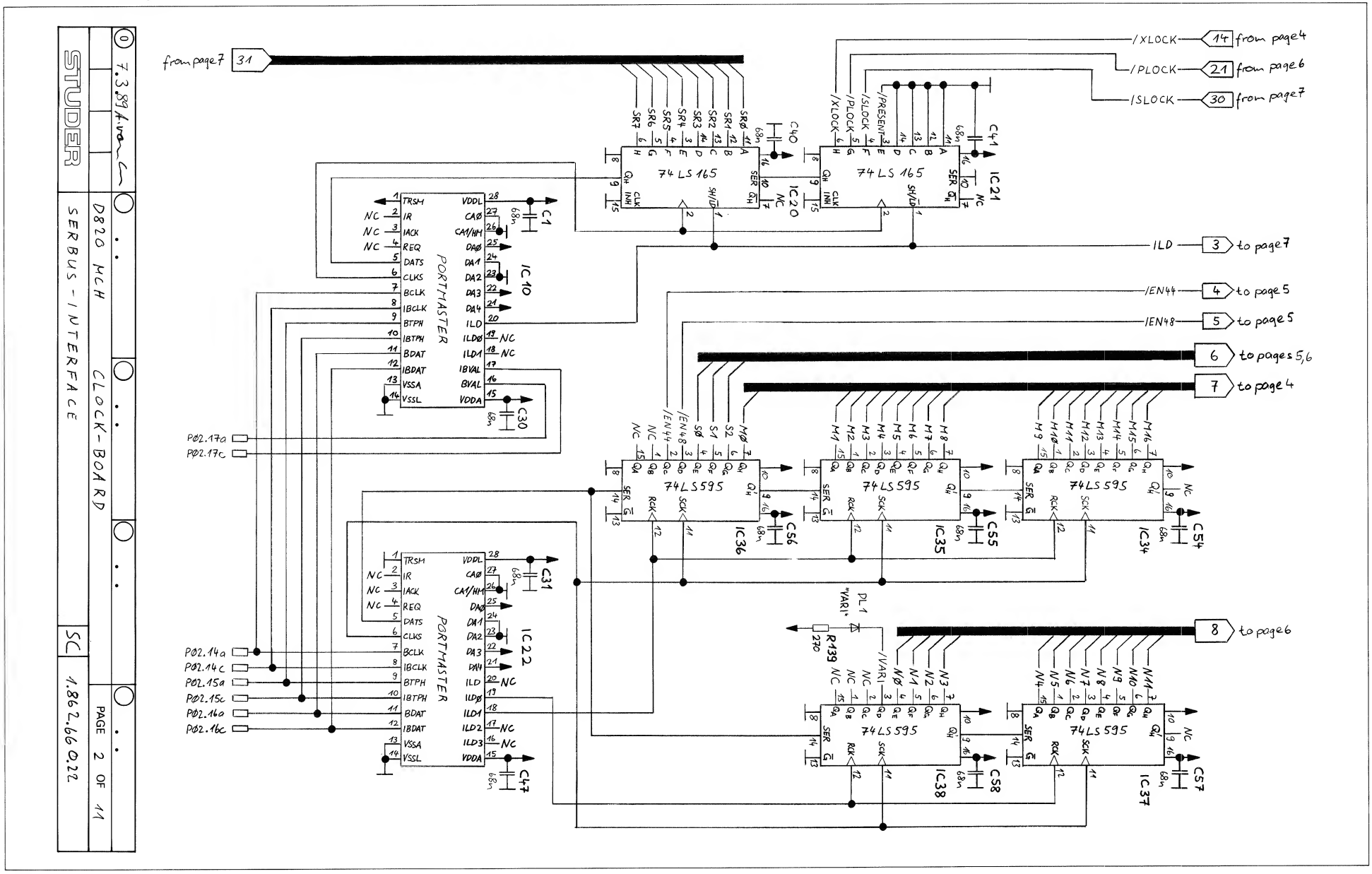

CLOCK BOARD 1.862.660.22

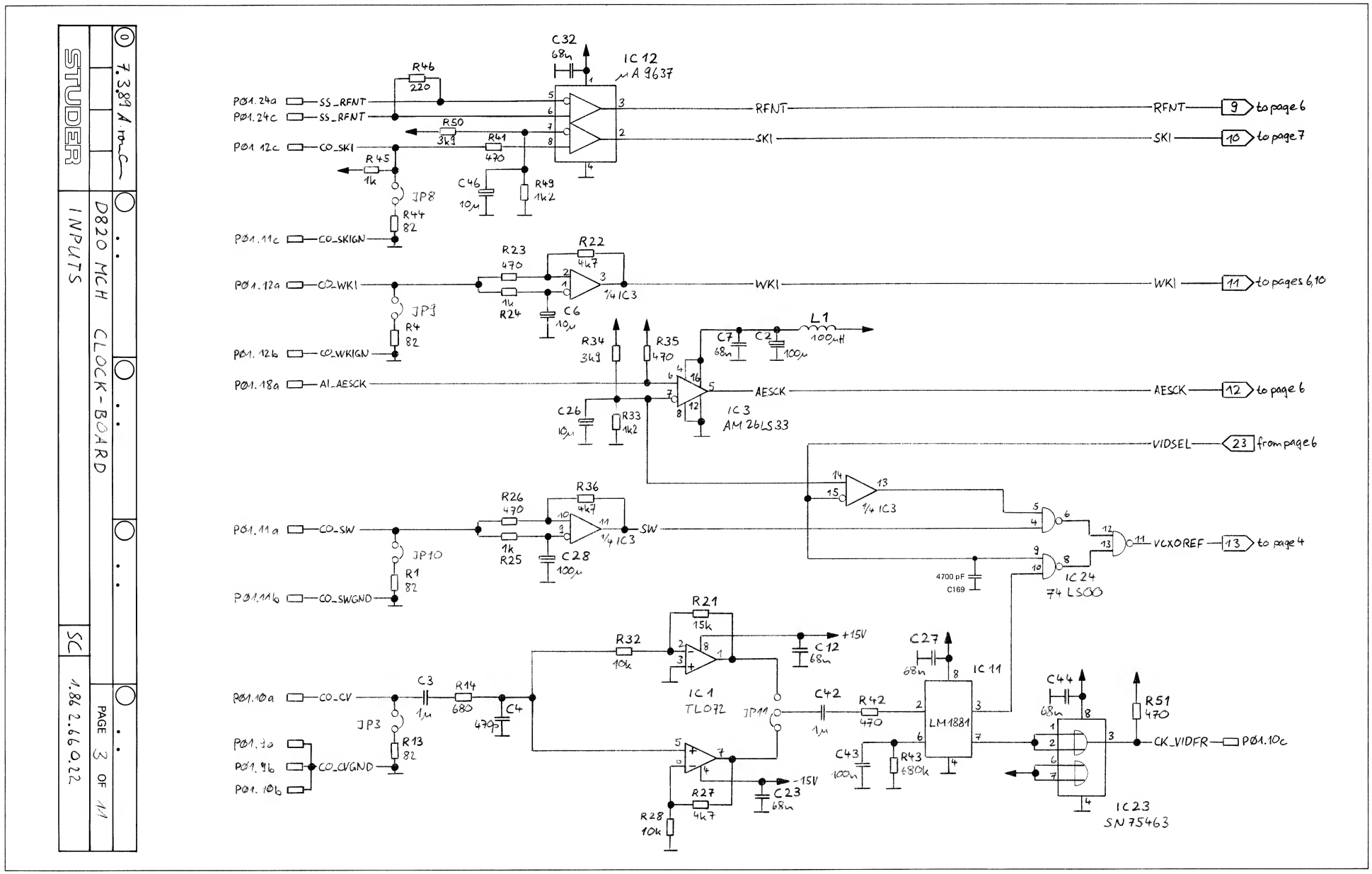

CLOCK BOARD 1.862.660.22

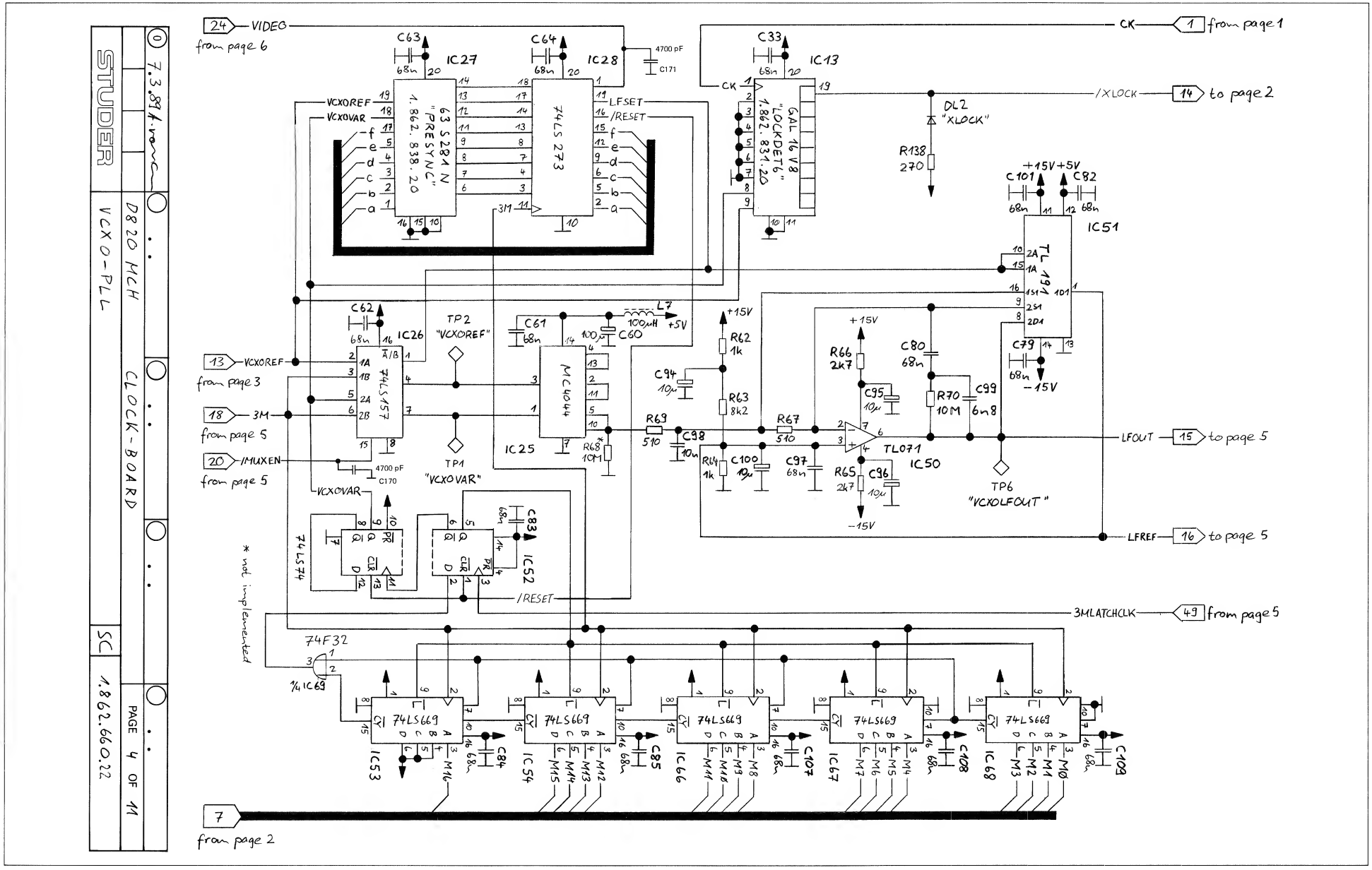

CLOCK BOARD 1.862.660.22

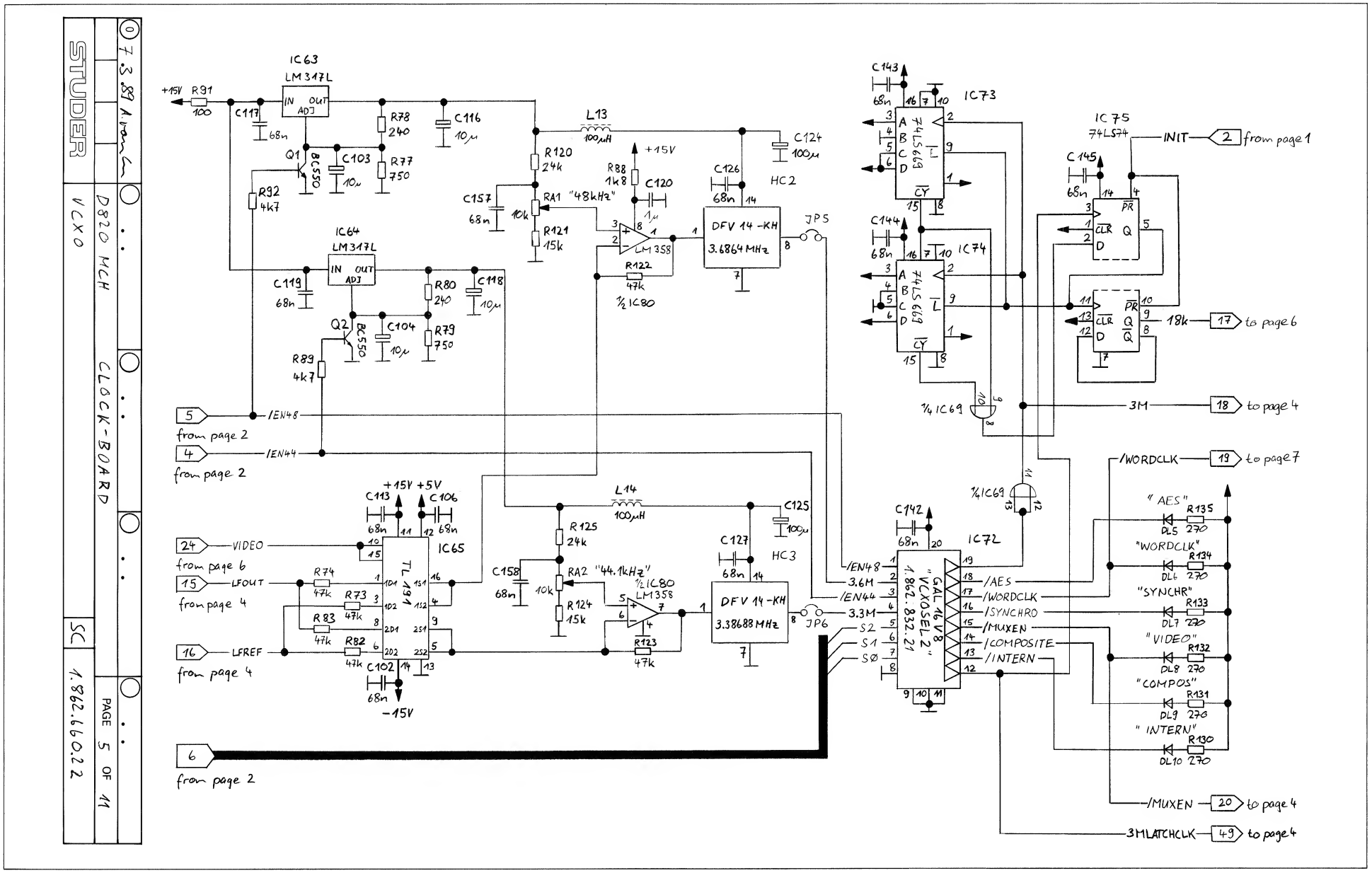

CLOCK BOARD 1.862.660.22

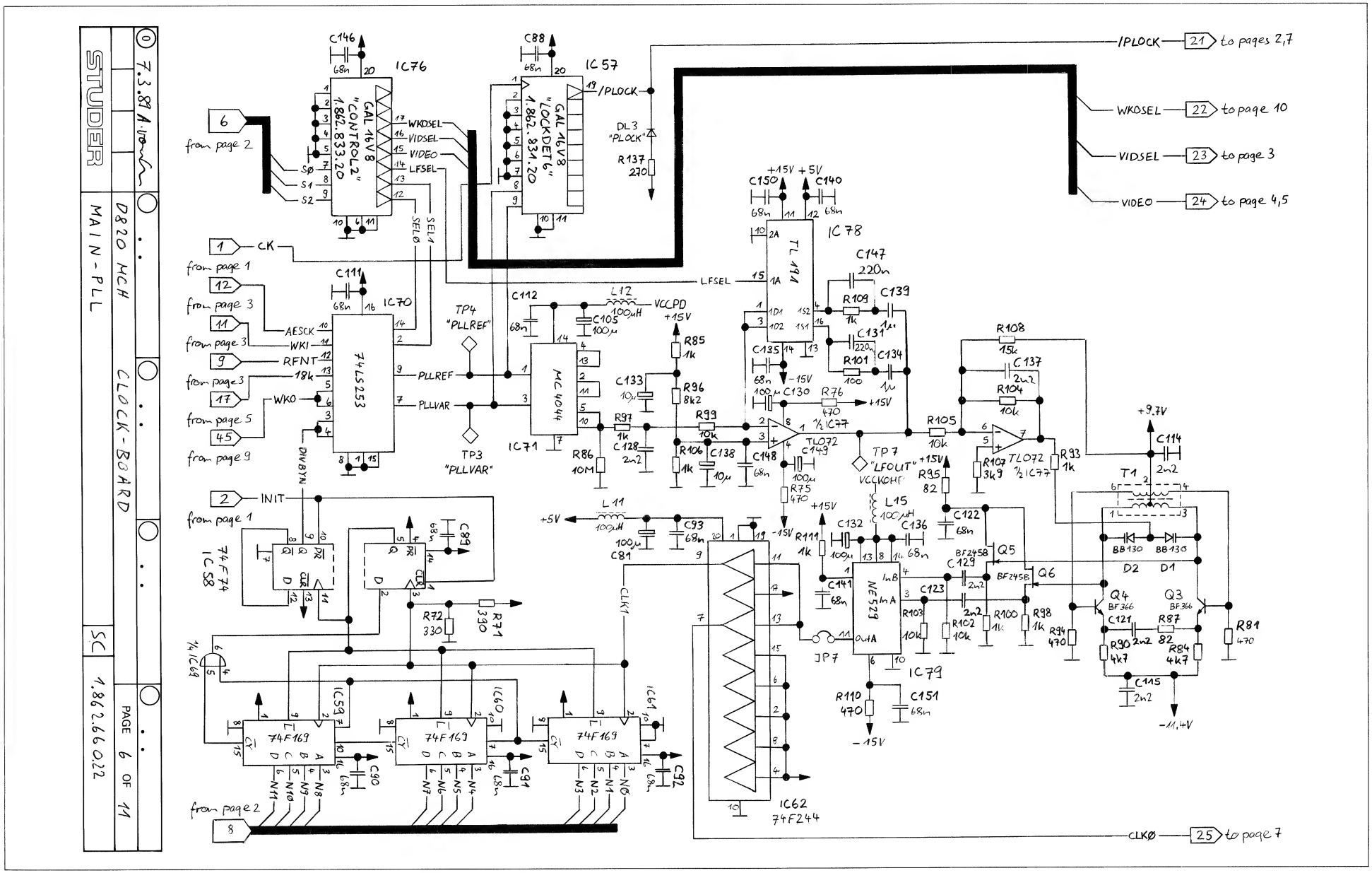

CLOCK BOARD 1.862.660.22

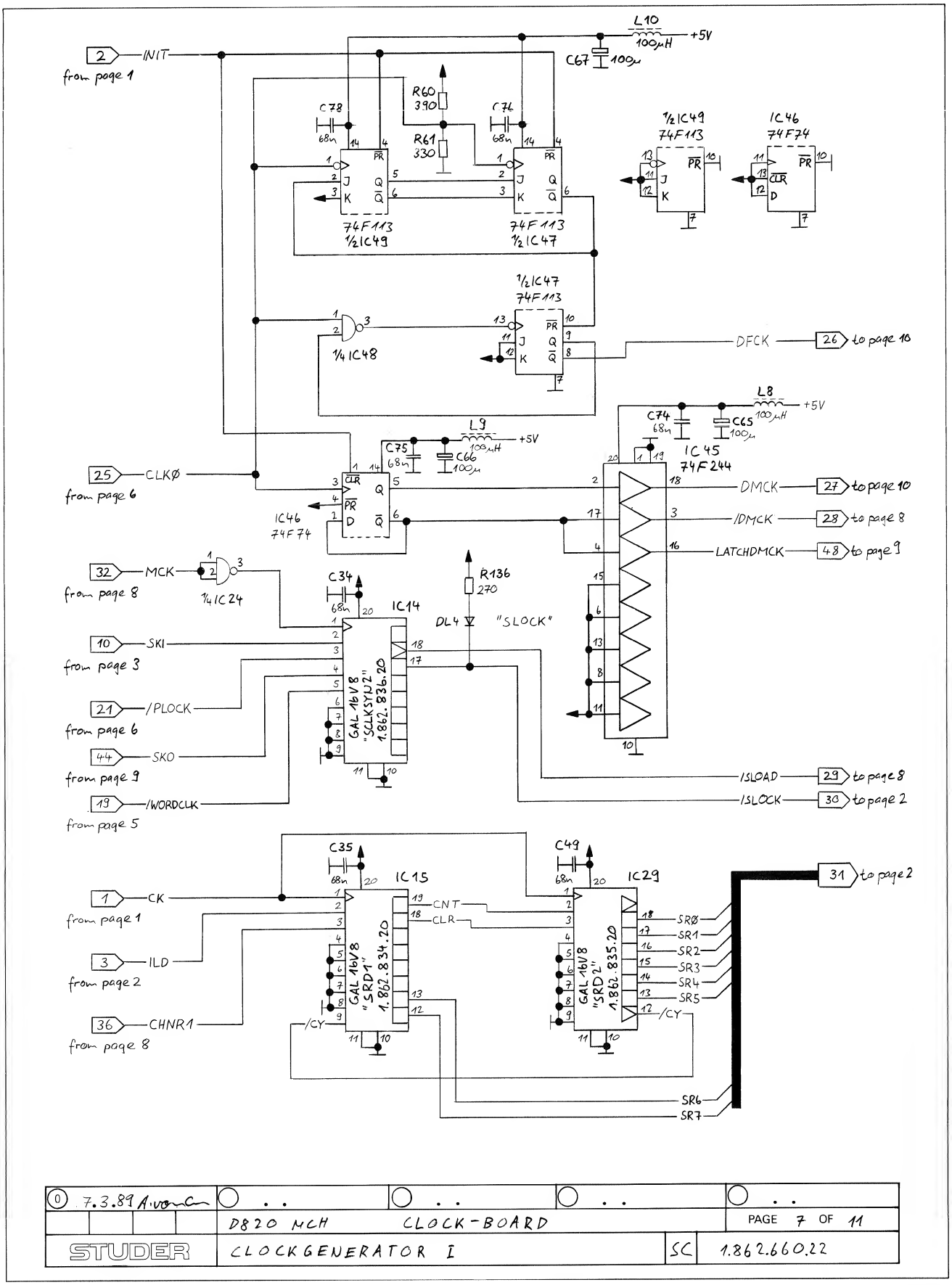

0 7.3.89 A. von Cu	. .	. .	. .	. .
	D820 MCH	CLOCK-BOARD		PAGE 7 OF 11
STUDER	CLOCKGENERATOR I		SC	1.862.660.22

CLOCK BOARD 1.862.660.22

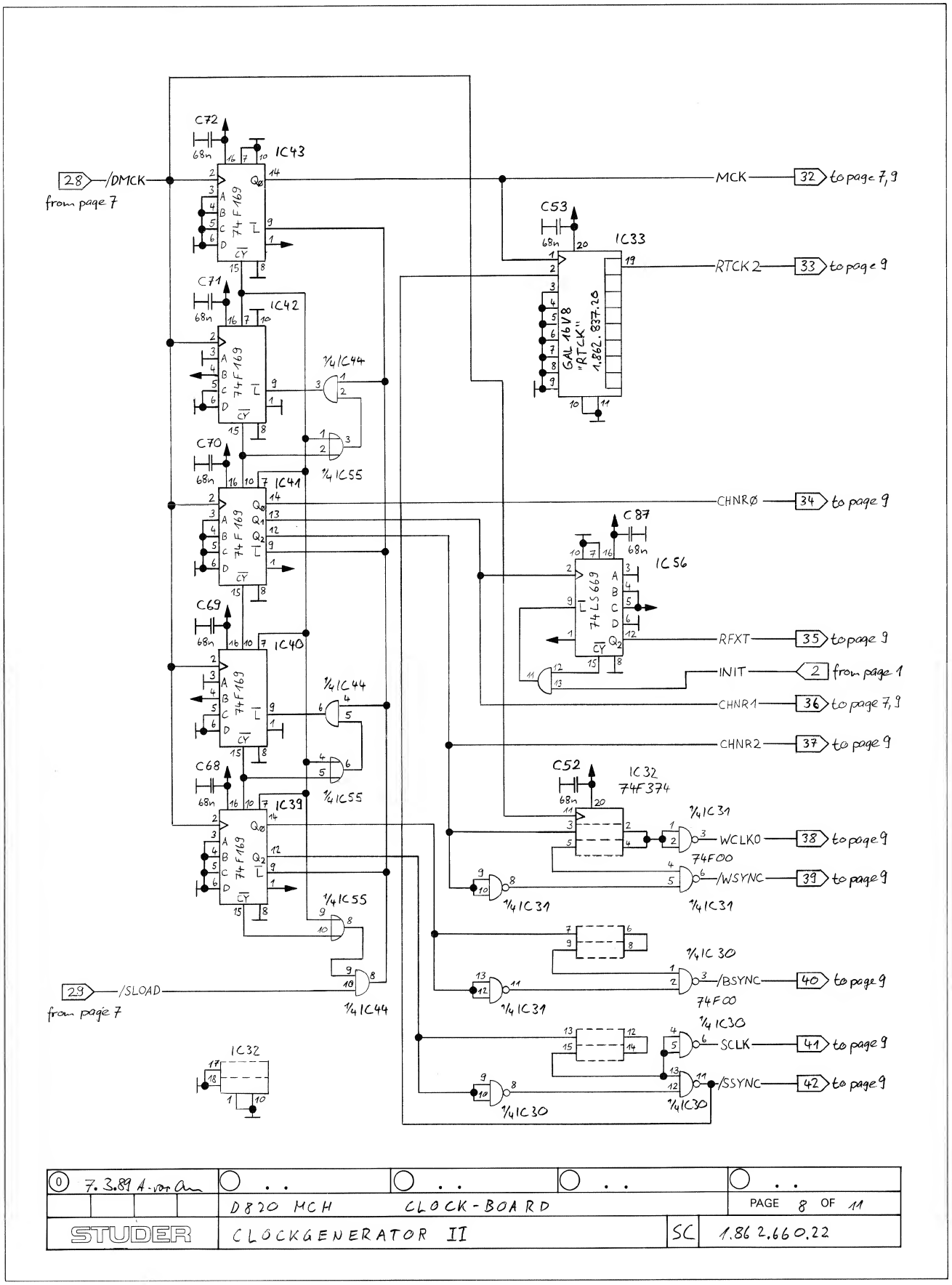

0 7.3.89 A. von Arx	. .	. .	. .	. .
	D820 MCH	CLOCK-BOARD		PAGE 8 OF 11
STUDER	CLOCKGENERATOR II		SC	1.862.660.22

CLOCK BOARD 1.862.660.22

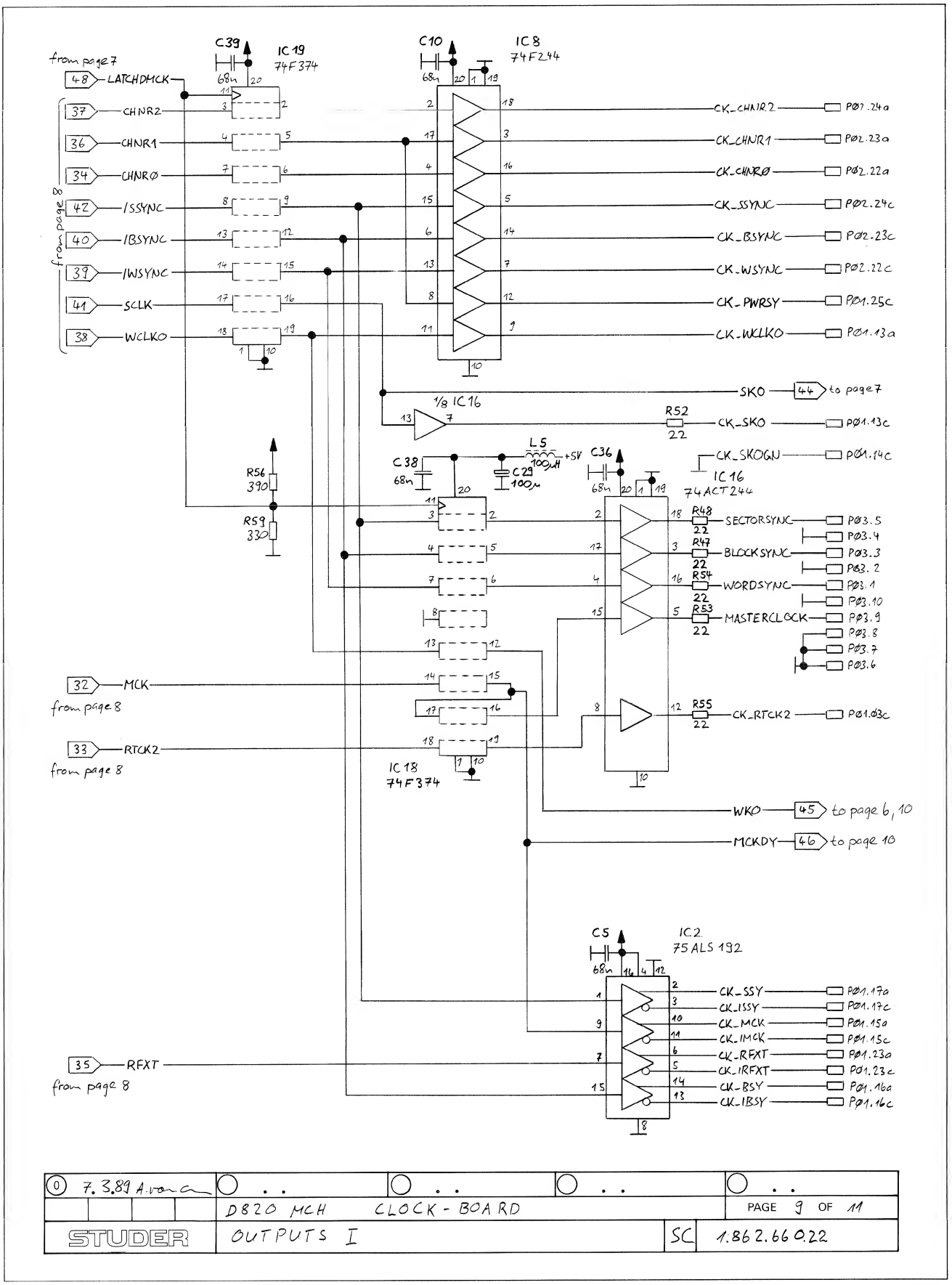

0 7.3.89 A. von A.	. .	. .	. .	. .
	D820 MCH CLOCK - BOARD			PAGE 9 OF 11
STUDER	OUTPUTS I		SC	1.862.660.22

CLOCK BOARD 1.862.660.22

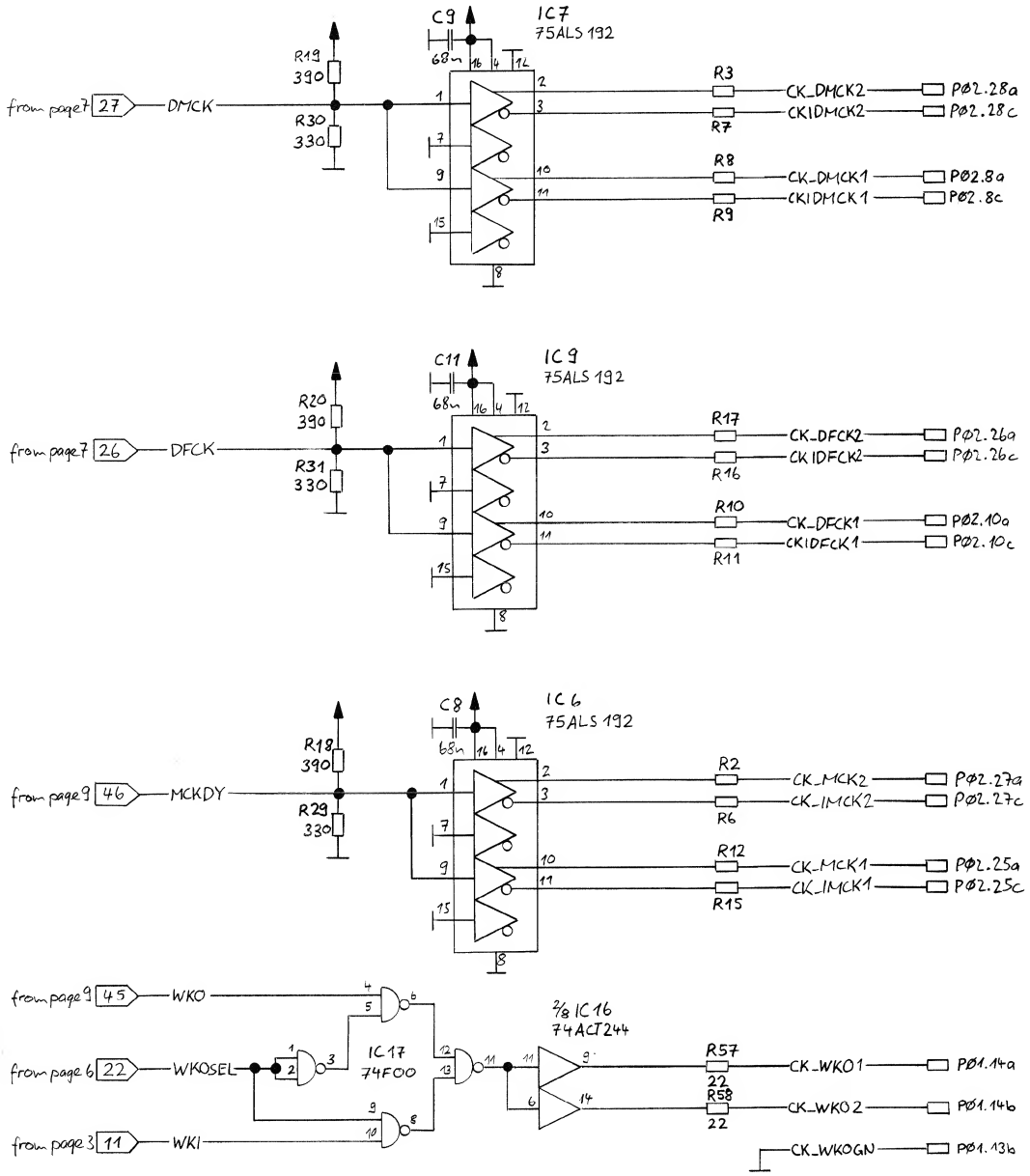

0 7.3.89 A. von Gunten	. .	. .	. .	. .
	D820 MCH CLOCK-BOARD			PAGE 10 OF 11
STUDER	OUTPUTS II		SC	1.862.660.22

CLOCK BOARD 1.862.660.22

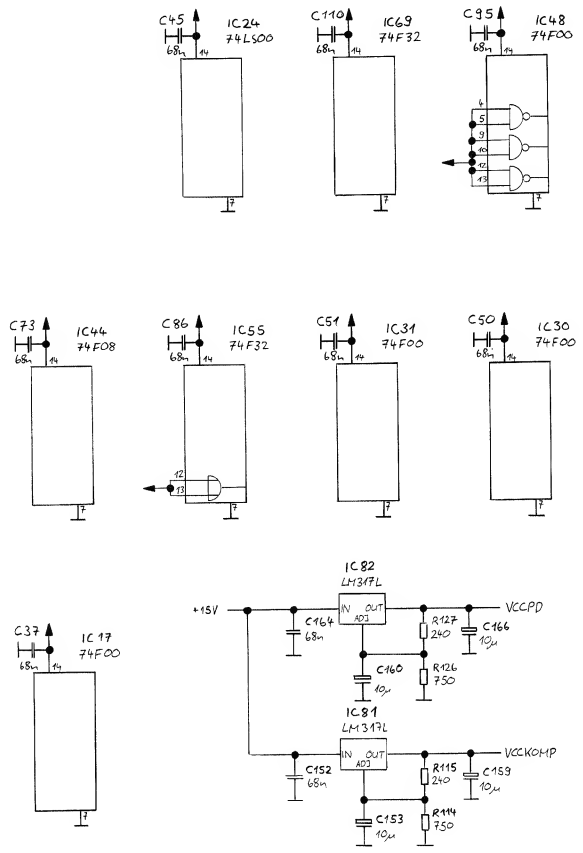

0 7.3.89 A. von C	. .	. .	. .	. .
	D820 MCH CLOCK-BOARD			PAGE 11 OF 11
STUDER			SC	1.862.660.22

CLOCK BOARD 1.862.660.22

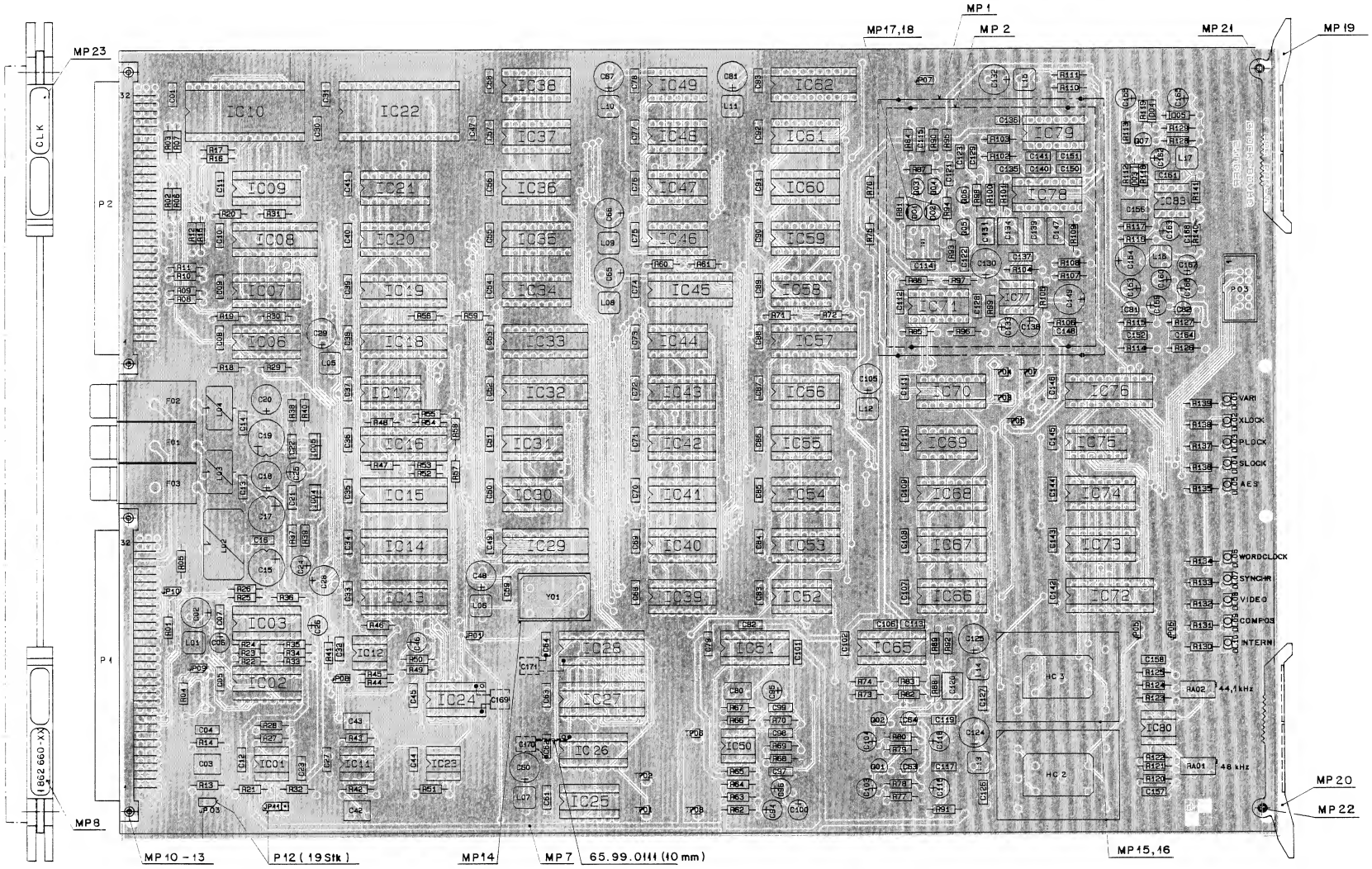

CLOCK BOARD 1.862.660.22

IND.	POS.NO.	PART NO.	VALUE	SPECIFICATIONS / EQUIVALENT	MANUF.
	C.....1	59.06.0683	.068 u	10%, 63V , PETP	ANY
	C.....2	59.22.3101	100 u	-20%, 10V , EL	ANY
	C.....3	59.06.0105	1.0 u	10%, 50V , PETP	ANY
	C.....4	59.32.1471	470 p	10%, 400V , CER	ANY
	C.....5	59.06.0683	.068 u	10%, 63V , PETP	ANY
	C.....6	59.22.6100	10 u	-20%, 35V , EL	ANY
	C.....7	59.06.0683	.068 u	10%, 63V , PETP	ANY
	C.....8	59.06.0683	.068 u	10%, 63V , PETP	ANY
	C.....9	59.06.0683	.068 u	10%, 63V , PETP	ANY
	C....10	59.06.0683	.068 u	10%, 63V , PETP	ANY
	C....11	59.06.0683	.068 u	10%, 63V , PETP	ANY
	C....12	59.06.0683	.068 u	10%, 63V , PETP	ANY
	C....13	59.06.0683	.068 u	10%, 63V , PETP	ANY
	C....14	59.06.0683	.068 u	10%, 63V , PETP	ANY
	C....15	59.22.3471	470 u	-20%, 10V , EL	ANY
	C....16	59.06.0683	.068 u	10%, 63V , PETP	ANY
	C....17	59.22.5221	220 u	-20%, 25V , EL	ANY
	C....18	59.22.6470	47 u	-20%, 40V , EL	ANY
	C....19	59.22.5221	220 u	-20%, 25V , EL	ANY
	C....20	59.22.6470	47 u	-20%, 40V , EL	ANY
	C....21	59.06.0683	.068 u	10%, 63V , PETP	ANY
	C....22	59.06.0683	.068 u	10%, 63V , PETP	ANY
	C....23	59.06.0683	.068 u	10%, 63V , PETP	ANY
	C....24	59.22.6100	10 u	-20%, 35V , EL	ANY
	C....25	59.22.6100	10 u	-20%, 35V , EL	ANY
	C....26	59.22.6100	10 u	-20%, 35V , EL	ANY
	C....27	59.06.0683	.068 u	10%, 63V , PETP	ANY
	C....28	59.22.3101	100 u	-20%, 10V , EL	ANY
	C....29	59.22.5101	100 u	-20%, 25V , EL	ANY
	C....30	59.06.0683	.068 u	10%, 63V , PETP	ANY
	C....31	59.06.0683	.068 u	10%, 63V , PETP	ANY
	C....32	59.06.0683	.068 u	10%, 63V , PETP	ANY
	C....33	59.06.0683	.068 u	10%, 63V , PETP	ANY
	C....34	59.06.0683	.068 u	10%, 63V , PETP	ANY
	C....35	59.06.0683	.068 u	10%, 63V , PETP	ANY
	C....36	59.06.0683	.068 u	10%, 63V , PETP	ANY
	C....37	59.06.0683	.068 u	10%, 63V , PETP	ANY

STUDER (00) 91/14/02 LAR CLOCK BOARD PL 1.862.660.22 PAGE 1

IND.	POS.NO.	PART NO.	VALUE	SPECIFICATIONS / EQUIVALENT	MANUF.
	C....38	59.06.0683	.068 u	10%, 63V , PETP	ANY
	C....39	59.06.0683	.068 u	10%, 63V , PETP	ANY
	C....40	59.06.0683	.068 u	10%, 63V , PETP	ANY
	C....41	59.06.0683	.068 u	10%, 63V , PETP	ANY
	C....42	59.06.0105	1.0 u	10%, 50V , PETP	ANY
	C....43	59.06.0104	100 n	10%, 63V , PETP	ANY
	C....44	59.06.0683	.068 u	10%, 63V , PETP	ANY
	C....45	59.06.0683	.068 u	10%, 63V , PETP	ANY
	C....46	59.22.6100	10 u	-20%, 35V , EL	ANY
	C....47	59.06.0683	.068 u	10%, 63V , PETP	ANY
	C....48	59.22.5101	100 u	-20%, 25V , EL	ANY
	C....49	59.06.0683	.068 u	10%, 63V , PETP	ANY
	C....50	59.06.0683	.068 u	10%, 63V , PETP	ANY
	C....51	59.06.0683	.068 u	10%, 63V , PETP	ANY
	C....52	59.06.0683	.068 u	10%, 63V , PETP	ANY
	C....53	59.06.0683	.068 u	10%, 63V , PETP	ANY
	C....54	59.06.0683	.068 u	10%, 63V , PETP	ANY
	C....55	59.06.0683	.068 u	10%, 63V , PETP	ANY
	C....56	59.06.0683	.068 u	10%, 63V , PETP	ANY
	C....57	59.06.0683	.068 u	10%, 63V , PETP	ANY
	C....58	59.06.0683	.068 u	10%, 63V , PETP	ANY
	C....59	59.06.0683	.068 u	10%, 63V , PETP	ANY
	C....60	59.22.5101	100 u	-20%, 25V , EL	ANY
	C....61	59.06.0683	.068 u	10%, 63V , PETP	ANY
	C....62	59.06.0683	.068 u	10%, 63V , PETP	ANY
	C....63	59.06.0683	.068 u	10%, 63V , PETP	ANY
	C....64	59.06.0683	.068 u	10%, 63V , PETP	ANY
	C....65	59.22.5101	100 u	-20%, 25V , EL	ANY
	C....66	59.22.5101	100 u	-20%, 25V , EL	ANY
	C....67	59.22.5101	100 u	-20%, 25V , EL	ANY
	C....68	59.06.0683	.068 u	10%, 63V , PETP	ANY
	C....69	59.06.0683	.068 u	10%, 63V , PETP	ANY
	C....70	59.06.0683	.068 u	10%, 63V , PETP	ANY
	C....71	59.06.0683	.068 u	10%, 63V , PETP	ANY
	C....72	59.06.0683	.068 u	10%, 63V , PETP	ANY
	C....73	59.06.0683	.068 u	10%, 63V , PETP	ANY
	C....74	59.06.0683	.068 u	10%, 63V , PETP	ANY

STUDER (00) 91/14/02 LAR CLOCK BOARD PL 1.862.660.22 PAGE 2

IND.	POS.NO.	PART NO.	VALUE	SPECIFICATIONS / EQUIVALENT	MANUF.
	C....75	59.06.0683	.068 u	10%, 63V , PETP	ANY
	C....76	59.06.0683	.068 u	10%, 63V , PETP	ANY
	C....77	59.06.0683	.068 u	10%, 63V , PETP	ANY
	C....78	59.06.0683	.068 u	10%, 63V , PETP	ANY
	C....79	59.06.0683	.068 u	10%, 63V , PETP	ANY
	C....80	59.06.0683	.068 u	10%, 63V , PETP	ANY
	C....81	59.22.5101	100 u	-20%, 25V , EL	ANY
	C....82	59.06.0683	.068 u	10%, 63V , PETP	ANY
	C....83	59.06.0683	.068 u	10%, 63V , PETP	ANY
	C....84	59.06.0683	.068 u	10%, 63V , PETP	ANY
	C....85	59.06.0683	.068 u	10%, 63V , PETP	ANY
	C....86	59.06.0683	.068 u	10%, 63V , PETP	ANY
	C....87	59.06.0683	.068 u	10%, 63V , PETP	ANY
	C....88	59.06.0683	.068 u	10%, 63V , PETP	ANY
	C....89	59.06.0683	.068 u	10%, 63V , PETP	ANY
	C....90	59.06.0683	.068 u	10%, 63V , PETP	ANY
	C....91	59.06.0683	.068 u	10%, 63V , PETP	ANY
	C....92	59.06.0683	.068 u	10%, 63V , PETP	ANY
	C....93	59.06.0683	.068 u	10%, 63V , PETP	ANY
	C....94	59.22.6100	10 u	-20%, 35V , EL	ANY
	C....95	59.22.6100	10 u	-20%, 35V , EL	ANY
	C....96	59.22.6100	10 u	-20%, 35V , EL	ANY
	C....97	59.06.0683	.068 u	10%, 63V , PETP	ANY
	C....98	59.06.0103	10 n	10%, 63V , PETP	ANY
	C....99	59.06.0682	6800 p	10%, 63V , PETP	ANY
	C...100	59.22.6100	10 u	-20%, 35V , EL	ANY
	C...101	59.06.0683	.068 u	10%, 63V , PETP	ANY
	C...102	59.06.0683	.068 u	10%, 63V , PETP	ANY
	C...103	59.22.6100	10 u	-20%, 35V , EL	ANY
	C...104	59.22.6100	10 u	-20%, 35V , EL	ANY
	C...105	59.22.5101	100 u	-20%, 25V , EL	ANY
	C...106	59.06.0683	.068 u	10%, 63V , PETP	ANY
	C...107	59.06.0683	.068 u	10%, 63V , PETP	ANY
	C...108	59.06.0683	.068 u	10%, 63V , PETP	ANY
	C...109	59.06.0683	.068 u	10%, 63V , PETP	ANY
	C...110	59.06.0683	.068 u	10%, 63V , PETP	ANY
	C...111	59.06.0683	.068 u	10%, 63V , PETP	ANY

STUDER (00) 91/14/02 LAR CLOCK BOARD PL 1.862.660.22 PAGE 3

IND.	POS.NO.	PART NO.	VALUE	SPECIFICATIONS / EQUIVALENT	MANUF.
	C...112	59.06.0683	.068 u	10%, 63V , PETP	ANY
	C...113	59.06.0683	.068 u	10%, 63V , PETP	ANY
	C...114	59.06.0222	2200 p	10%, 63V , PETP	ANY
	C...115	59.06.0222	2200 p	10%, 63V , PETP	ANY
	C...116	59.22.6100	10 u	-20%, 35V , EL	ANY
	C...117	59.06.0683	.068 u	10%, 63V , PETP	ANY
	C...118	59.22.6100	10 u	-20%, 35V , EL	ANY
	C...119	59.06.0683	.068 u	10%, 63V , PETP	ANY
	C...120	59.06.0105	1.0 u	10%, 50V , PETP	ANY
	C...121	59.06.0222	2200 p	10%, 63V , PETP	ANY
	C...122	59.06.0683	.068 u	10%, 63V , PETP	ANY
	C...123	59.06.0222	2200 p	10%, 63V , PETP	ANY
	C...124	59.22.5101	100 u	-20%, 25V , EL	ANY
	C...125	59.22.5101	100 u	-20%, 25V , EL	ANY
	C...126	59.06.0683	.068 u	10%, 63V , PETP	ANY
	C...127	59.06.0683	.068 u	10%, 63V , PETP	ANY
	C...128	59.06.0222	2200 p	10%, 63V , PETP	ANY
	C...129	59.06.0222	2200 p	10%, 63V , PETP	ANY
	C...130	59.22.5101	100 u	-20%, 25V , EL	ANY
	C...131	59.06.0224	.22 u	10%, 63V , PETP	ANY
	C...132	59.22.5101	100 u	-20%, 25V , EL	ANY
	C...133	59.22.6100	10 U	-20%, 35V , EL	ANY
	C...134	59.06.0105	1.0 u	10%, 50V , PETP	ANY
	C...135	59.06.0683	.068 u	10%, 63V , PETP	ANY
	C...136	59.06.0683	.068 u	10%, 63V , PETP	ANY
	C...137	59.06.0222	2200 p	10%, 63V , PETP	ANY
	C...138	59.22.6100	10 U	-20%, 35V , EL	ANY
	C...139	59.06.0105	1.0 u	10%, 50V , PETP	ANY
	C...140	59.06.0683	.068 u	10%, 63V , PETP	ANY
	C...141	59.06.0683	.068 u	10%, 63V , PETP	ANY
	C...142	59.06.0683	.068 u	10%, 63V , PETP	ANY
	C...143	59.06.0683	.068 u	10%, 63V , PETP	ANY
	C...144	59.06.0683	.068 u	10% 63V , PETP	ANY
	C...145	59.06.0683	.068 u	10%, 63V , PETP	ANY
	C...146	59.06.0683	.068 u	10%, 63V , PETP	ANY
	C...147	59.06.0224	.22 u	10%, 63V , PETP	ANY
	C...148	59.06.0683	.068 u	10%, 63V , PETP	ANY

STUDER (00) 91/14/02 LAR CLOCK BOARD PL 1.862.660.22 PAGE 4

IND.	POS.NO.	PART NO.	VALUE	SPECIFICATIONS / EQUIVALENT	MANUF.
	C...149	59.22.5101	100 u	-20%, 25V , EL	ANY
	C...150	59.06.0683	.068 u	10%, 63V , PETP	ANY
	C...151	59.06.0683	.068 u	10%, 63V , PETP	ANY
	C...152	59.06.0683	.068 u	10%, 63V , PETP	ANY
	C...153	59.22.6100	10 u	-20%, 35V , EL	ANY
	C...154	59.22.6470	47 u	-20%, 40V , EL	ANY
	C...155	59.22.6100	10 u	-20%, 35V , EL	ANY
	C...156	59.06.0105	1.0 u	10%, 50V , PETP	ANY
	C...157	59.06.0683	.068 u	10%, 63V , PETP	ANY
	C...158	59.06.0683	.068 u	10%, 63V , PETP	ANY
	C...159	59.22.6100	10 u	-20%, 35V , EL	ANY
	C...160	59.22.6100	10 u	-20%, 35V , EL	ANY
	C...161	59.06.0683	.068 u	10%, 63V , PETP	ANY
	C...162	59.22.6100	10 u	-20%, 35V , EL	ANY
	C...163	59.22.6100	10 u	-20%, 35V , EL	ANY
	C...164	59.06.0683	.068 u	10%, 63V , PETP	ANY
	C...165	59.22.6100	10 u	-20%, 35V , EL	ANY
	C...166	59.22.6100	10 u	-20%, 35V , EL	ANY
	C...167	59.22.6100	10 u	-20%, 35V , EL	ANY
	C...168	59.06.0683	.068 u	10%, 63V , PETP	ANY
	C...169	59.44.2472	4700 p	10%, 50V, CER	ANY
	C...170	59.44.2472	4700 p	10%, 50V, CER	ANY
	C...171	59.44.2472	4700 p	10%, 50V, CER	ANY
	D.....1	50.99.0168		BB 130	ANY
	D.....2	50.99.0168		BB 130	ANY
	D.....3	50.99.0169		1N 825	ANY
	D.....4	50.04.0125		1N 4448	ANY
	D.....5	50.04.0125		1N 4448	ANY
	DL....1	50.04.2132		TLUG 2400 GN	ANY
	DL....2	50.04.2121		TLUG 2400 RT	ANY
	DL....3	50.04.2121		TLUG 2400 RT	ANY
	DL....4	50.04.2121		TLUG 2400 RT	ANY
	DL....5	50.04.2132		TLUG 2400 GN	ANY
	DL....6	50.04.2132		TLUG 2400 GN	ANY
	DL....7	50.04.2132		TLUG 2400 GN	ANY

STUDER (00) 91/14/02 LAR CLOCK BOARD PL 1.862.660.22 PAGE 5

IND.	POS.NO.	PART NO.	VALUE	SPECIFICATIONS / EQUIVALENT	MANUF.
	DL....8	50.04.2132		TLUG 2400 GN	ANY
	DL....9	50.04.2132		TLUG 2400 GN	ANY
	DL...10	50.04.2132		TLUG 2400 GN	ANY
	F.....1	51.01.0110		T200mA /250V, 5 * 20	ANY
	F.....2	51.01.0110		T200mA /250V, 5 * 20	ANY
	F.....3	51.99.0133		MINIFUSE 7A	ANY
	HC....2	89.01.1505		3.6864 MHZ, VCXO	ANY
	HC....3	89.01.1504		3.38688 MHZ, VCXO	ANY
	IC....1	50.09.0121		TL 072 BCP	ANY
	IC....2	50.15.0123		SN75 ALS 192N	ANY
	IC....3	50.15.0109		AM26 LS33 PC,DS26 LS33 CN	ANY
	IC....4	50.10.0104		LM 317	ANY
	IC....5	50.10.0105		LM 337	ANY
	IC....6	50.15.0123		SN75 ALS 192N	ANY
	IC....7	50.15.0123		SN75 ALS 192N	ANY
	IC....8	50.21.0244		74 F 244	ANY
	IC....9	50.15.0123		SN75 ALS 192N	ANY
	IC...10	50.50.0010		PORTMASTER	St
	IC...11	50.11.0145		LM 1881 N	ANY
	IC...12	50.15.0114		UA 9637 ACP, 9637 ATC	ANY
	IC...13	50.18.0100		16 V 8 - 25 LP (SW 1.862.831.20)	ANY
	IC...14	50.18.0100		16 V 8 - 25 LP (SW 1.862.836.20)	ANY
	IC...15	50.18.0100		16 V 8 - 25 LP (SW 1.862.834.20)	ANY
	IC...16	50.17.7244		74 ACT 244	ANY
	IC...17	50.21.0000		74 F 00	ANY
	IC...18	50.21.0374		74 F 374	ANY
	IC...19	50.21.0374		74 F 374	ANY
	IC...20	50.06.0165		SN 74 LS 165 N TTL	ANY
	IC...21	50.06.0165		SN 74 LS 165 N TTL	ANY
	IC...22	50.50.0010		PORTMASTER	St
	IC...23	50.05.0203		SN 75 463 P	ANY
	IC...24	50.06.0000		SN 74 LS 00 N	ANY
	IC...25	50.05.0149		MC 4044 L MC 4344 L	ANY
	IC...26	50.06.0157		SN 74 LS 157 N	ANY

STUDER (00) 91/14/02 LAR CLOCK BOARD PL 1.862.660.22 PAGE 6

IND.	POS.NO.	PART NO.	VALUE	SPECIFICATIONS / EQUIVALENT	MANUF.
	IC...27	50.14.0114		63 S 281 N (SW 1.862.838.20)	ANY
	IC...28	50.06.0273		SN 74 LS 273 N	ANY
	IC...29	50.18.0100		16 V 8 - 25 LP (SW 1.862.835.20)	ANY
	IC...30	50.21.0000		74 F 00	ANY
	IC...31	50.21.0000		74 F 00	ANY
	IC...32	50.21.0374		74 F 374	ANY
	IC...33	50.18.0100		16 V 8 - 25 LP (SW 1.862.837.20)	ANY
	IC...34	50.06.0595		SN 74 LS 595 N TTL	ANY
	IC...35	50.06.0595		SN 74 LS 595 N TTL	ANY
	IC...36	50.06.0595		SN 74 LS 595 N TTL	ANY
	IC...37	50.06.0595		SN 74 LS 595 N TTL	ANY
	IC...38	50.06.0595		SN 74 LS 595 N TTL	ANY
	IC...39	50.21.0169		74 F 169	ANY
	IC...40	50.21.0169		74 F 169	ANY
	IC...41	50.21.0169		74 F 169	ANY
	IC...42	50.21.0169		74 F 169	ANY
	IC...43	50.21.0169		74 F 169	ANY
	IC...44	50.21.0008		74 F 08	ANY
	IC...45	50.21.0244		74 F 244	ANY
	IC...46	50.21.0074		74 F 74	ANY
	IC...47	50.21.0113		74 F 113	ANY
	IC...48	50.21.0000		74 F 00	ANY
	IC...49	50.21.0113		74 F 113	ANY
	IC...50	50.09.0103		TL 071 CP	ANY
	IC...51	50.11.0120		TL 191 CN	ANY
	IC...52	50.06.0074		SN 74 LS 74 N	ANY
	IC...53	50.06.0669		SN 74 LS 669 N	ANY
	IC...54	50.06.0669		SN 74 LS 669 N	ANY
	IC...55	50.21.0032		74 F 32	ANY
	IC...56	50.06.0669		74 LS 669	ANY
	IC...57	50.18.0100		16 V 8 - 25 LP (SW 1.862.831.20)	ANY
	IC...58	50.21.0074		74 F 74	ANY
	IC...59	50.21.0169		74 F 169	ANY
	IC...60	50.21.0169		74 F 169	ANY
	IC...61	50.21.0169		74 F 169	ANY
	IC...62	50.21.0244		74 F 244	ANY
	IC...63	50.10.0108		LM 317 LZ	ANY

STUDER (00) 91/14/02 LAR CLOCK BOARD PL 1.862.660.22 PAGE 7

IND.	POS.NO.	PART NO.	VALUE	SPECIFICATIONS / EQUIVALENT	MANUF.
	IC...64	50.10.0108		LM 317 LZ	ANY
	IC...65	50.11.0120		TL 191 CN	ANY
	IC...66	50.06.0669		SN 74 LS 669 N	ANY
	IC...67	50.06.0669		SN 74 LS 669 N	ANY
	IC...68	50.06.0669		SN 74 LS 669 N	ANY
	IC...69	50.21.0032		74 F 32	ANY
	IC...70	50.06.0253		74 LS 253	ANY
	IC...71	50.05.0149		MC 4044 L MC 4344 L	ANY
	IC...72	50.18.0100		16 V 8 - 25 LP (SW 1.862.832.22)	ANY
	IC...73	50.06.0669		74 LS 669	ANY
	IC...74	50.06.0669		74 LS 669	ANY
	IC...75	50.06.0074		SN 74 LS 74 N	ANY
	IC...76	50.18.0100		16 V 8 - 25 LP (SW 1.862.833.21)	ANY
	IC...77	50.09.0121		TL 072 BCP	ANY
	IC...78	50.11.0120		TL 191 CN	ANY
	IC...79	50.11.0115		NE 529 N	ANY
	IC...80	50.05.0286		LM 358 N	ANY
	IC...81	50.10.0108		LM 317 LZ	ANY
	IC...82	50.10.0108		LM 317 LZ	ANY
	IC...83	50.09.0121		TL 072 BCP	ANY
	J.....1	54.01.0021		JUMPER CONNECTOR	ANY
	J.....3	54.01.0021		JUMPER CONNECTOR	ANY
	J.....4	54.01.0021		JUMPER CONNECTOR	ANY
	J.....5	54.01.0021		JUMPER CONNECTOR	ANY
	J.....6	54.01.0021		JUMPER CONNECTOR	ANY
	J.....7	54.01.0021		JUMPER CONNECTOR	ANY
	J.....8	54.01.0021		JUMPER CONNECTOR	ANY
	J.....9	54.01.0021		JUMPER CONNECTOR	ANY
	J....10	54.01.0021		JUMPER CONNECTOR	ANY
	L.....1	62.02.3101	100 uH	10%, RAD., RM 5	ANY
	L.....2	62.03.0030	110 uH	3 A, FILTER	ANY
	L.....3	62.03.0010	48 uH	2 A, FILTER	ANY
	L.....4	62.03.0010	48 uH	2 A, FILTER	ANY
	L.....5	62.02.3101	100 uH	10%, RAD., RM 5	ANY
	L.....6	62.02.3101	100 uH	10%, RAD., RM 5	ANY

STUDER (00) 91/14/02 LAR CLOCK BOARD PL 1.862.660.22 PAGE 8

IND.	POS.NO.	PART NO.	VALUE	SPECIFICATIONS / EQUIVALENT	MANUF.
	L.....7	62.02.3101	100 uH	10%, RAD., RM 5	ANY
	L.....8	62.02.3101	100 uH	10%, RAD., RM 5	ANY
	L.....9	62.02.3101	100 uH	10%, RAD., RM 5	ANY
	L....10	62.02.3101	100 uH	10%, RAD., RM 5	ANY
	L....11	62.02.3101	100 uH	10%, RAD., RM 5	ANY
	L....12	62.02.3101	100 uH	10%, RAD., RM 5	ANY
	L....13	62.02.3101	100 uH	10%, RAD., RM 5	ANY
	L....14	62.02.3101	100 uH	10%, RAD., RM 5	ANY
	L....15	62.02.3101	100 uH	10%, RAD., RM 5	ANY
	L....16	62.02.3101	100 uH	10%, RAD., RM 5	ANY
	L....17	62.02.3101	100 uH	10%, RAD., RM 5	ANY
	MP....1	1.862.660.03		ABSCHIRMBLECH OBEN	St
	MP....2	1.862.660.02		ABSCHIRMBLECH UNTEN	St
	MP....3	1.010.108.51		TEXT-ETIK. 5*20 (T200mA)	St
	MP....4	1.010.108.51		TEXT-ETIK. 5*20 (T200mA)	St
	MP....5	1.010.130.51		TEXT-ETIK. 5*20 (F7.00A)	St
	MP....6	43.01.0108		ESE-WARNSCHILD	ANY
	MP....7	1.862.660.11		CLOCK PCB	Pi
	MP....8	1.862.660.01		NR-ETIKETTE	ANY
	MP....9	1.101.001.22		TEXT-ETIK. 5*20 HARDWARE -22	St
	MP...10	28.99.0119		ROHRNIETE D 2.5*0.15* 10	ANY
	MP...11	28.99.0119		ROHRNIETE D 2.5*0.15* 10	ANY
	MP...12	28.99.0119		ROHRNIETE D 2.5*0.15* 10	ANY
	MP...13	28.99.0119		ROHRNIETE D 2.5*0.15* 10	ANY
	MP...14	1.010.003.89		QUARZ _ ISOLIERPLATTE	St
	MP...15	1.010.003.89		QUARZ _ ISOLIERPLATTE	St
	MP...16	1.010.003.89		QUARZ _ ISOLIERPLATTE	St
	MP...17	55.03.0350		DISTANZSTUECK FUER D01	ANY
	MP...18	55.03.0350		DISTANZSTUECK FUER D02	ANY
	MP...19	1.862.650.05		AUSWERFERHEBEL	St
	MP...20	1.862.650.05		AUSWERFERHEBEL	St
	MP...21	1.862.650.06		AUSWERFERSTIFT	St
	MP...22	1.862.650.06		AUSWERFERSTIFT	St
	MP...23	1.862.660.04		TEXT-ETIKETTE	ST
	P.....1	54.01.0358		CONNECTOR 3 * 32	ANY

STUDER (00) 91/14/02 LAR CLOCK BOARD PL 1.862.660.22 PAGE 9

IND.	POS.NO.	PART NO.	VALUE	SPECIFICATIONS / EQUIVALENT	MANUF.
	P.....2	54.01.0358		CONNECTOR 3 * 32	ANY
	P.....3	54.14.2001		10-PIN PRINT CONNECTOR	ANY
	P....12	54.01.0020		Stiftleiste **** QTY19 ***************	ANY
	Q.....1	50.03.0524		BC 550	ANY
	Q.....2	50.03.0524		BC 550	ANY
	Q.....3	50.03.0514		BF 366	ANY
	Q.....4	50.03.0514		BF 366	ANY
	Q.....5	50.03.1100		BF 245 B	ANY
	Q.....6	50.03.1100		BF 245 B	ANY
	Q.....7	50.03.0496		BC 560	ANY
	R.....1	57.11.3820	82	1%, 0207 , MF	ANY
	R.....2	57.11.3220	22	1%, 0207 , MF	ANY
	R.....3	57.11.3220	22	1%, 0207 , MF	ANY
	R.....4	57.11.3820	82	1%, 0207 , MF	ANY
	R.....5	57.11.3471	470	1%, 0207 , MF	ANY
	R.....6	57.11.3220	22	1%, 0207 , MF	ANY
	R.....7	57.11.3220	22	1%, 0207 , MF	ANY
	R.....8	57.11.3220	22	1%, 0207 , MF	ANY
	R.....9	57.11.3220	22	1%, 0207 , MF	ANY
	R....10	57.11.3220	22	1%, 0207 , MF	ANY
	R....11	57.11.3220	22	1%, 0207 , MF	ANY
	R....12	57.11.3220	22	1%, 0207 , MF	ANY
	R....13	57.11.3820	82	1%, 0207 , MF	ANY
	R....14	57.11.3681	680	1%, 0207 , MF	ANY
	R....15	57.11.3220	22	1%, 0207 , MF	ANY
	R....16	57.11.3220	22	1%, 0207 , MF	ANY
	R....17	57.11.3220	22	1%, 0207 , MF	ANY
	R....18	57.11.3391	390	1%, 0207 , MF	ANY
	R....19	57.11.3391	390	1%, 0207 , MF	ANY
	R....20	57.11.3391	390	1%, 0207 , MF	ANY
	R....21	57.11.3153	15 k	1%, 0207 , MF	ANY
	R....22	57.11.3472	4.7 k	1%, 0207 , MF	ANY
	R....23	57.11.3471	470	1% 0207 , MF	ANY
	R....24	57.11.3102	1 k	1%, 0207 , MF	ANY
	R....25	57.11.3102	1 k	1%, 0207 , MF	ANY

STUDER (00) 91/14/02 LAR CLOCK BOARD PL 1.862.660.22 PAGE 10

IND.	POS.NO.	PART NO.	VALUE	SPECIFICATIONS / EQUIVALENT	MANUF.
	R....26	57.11.3471	470	1% 0207 , MF	ANY
	R....27	57.11.3472	4.7 k	1%, 0207 , MF	ANY
	R....28	57.11.3103	10 k	1%, 0207 , MF	ANY
	R....29	57.11.3331	330	1%, 0207 , MF	ANY
	R....30	57.11.3331	330	1%, 0207 , MF	ANY
	R....31	57.11.3331	330	1%, 0207 , MF	ANY
	R....32	57.11.3103	10 k	1%, 0207 , MF	ANY
	R....33	57.11.3122	1.2 k	1%, 0207 , MF	ANY
	R....34	57.11.3392	3.9 k	1%, 0207 , MF	ANY
	R....35	57.11.3471	470	1% 0207 , MF	ANY
	R....36	57.11.3472	4.7 k	1%, 0207 , MF	ANY
	R....37	57.11.3132	1.3 k	1%, 0207 , MF	ANY
	R....38	57.11.3132	1.3 k	1%, 0207 , MF	ANY
	R....39	57.11.3121	120	1%, 0207 , MF	ANY
	R....40	57.11.3121	120	1%, 0207 , MF	ANY
	R....41	57.11.3471	470	1% 0207 , MF	ANY
	R....42	57.11.3471	470	1% 0207 , MF	ANY
	R....43	57.11.3684	680 k	1%, 0207 , MF	ANY
	R....44	57.11.3820	82	1%, 0207 , MF	ANY
	R....45	57.11.3102	1 k	1%, 0207 , MF	ANY
	R....46	57.11.3221	220	1%, 0207 , MF	ANY
	R....47	57.11.3220	22	1%, 0207 , MF	ANY
	R....48	57.11.3220	22	1%, 0207 , MF	ANY
	R....49	57.11.3122	1.2 k	1%, 0207 , MF	ANY
	R....50	57.11.3392	3.9 k	1%, 0207 , MF	ANY
	R....51	57.11.3471	470	1% 0207 , MF	ANY
	R....52	57.11.3220	22	1%, 0207 , MF	ANY
	R....53	57.11.3220	22	1%, 0207 , MF	ANY
	R....54	57.11.3220	22	1%, 0207 , MF	ANY
	R....55	57.11.3220	22	1%, 0207 , MF	ANY
	R....56	57.11.3391	390	1%, 0207 , MF	ANY
	R....57	57.11.3220	22	1%, 0207 , MF	ANY
	R....58	57.11.3220	22	1%, 0207 , MF	ANY
	R....59	57.11.3331	330	1%, 0207 , MF	ANY
	R....60	57.11.3391	390	1%, 0207 , MF	ANY
	R....61	57.11.3331	330	1%, 0207 , MF	ANY
	R....62	57.11.3102	1 k	1%, 0207 , MF	ANY

STUDER (00) 91/14/02 LAR CLOCK BOARD PL 1.862.660.22 PAGE 11

IND.	POS.NO.	PART NO.	VALUE	SPECIFICATIONS / EQUIVALENT	MANUF.
	R....63	57.11.3822	8.2 k	1%, 0207 , MF	ANY
	R....64	57.11.3102	1 k	1%, 0207 , MF	ANY
	R....65	57.11.3272	2.7 k	1%, 0207 , MF	ANY
	R....66	57.11.3272	2.7 k	1%, 0207 , MF	ANY
	R....67	57.11.3511	510	1%, 0207 , MF	ANY
	R....69	57.11.3511	510	1% 0207 , MF	ANY
	R....70	57.11.5106	10 M	1%, 0207 , MF	ANY
	R....71	57.11.3391	390	1%, 0207 , MF	ANY
	R....72	57.11.3331	330	1%, 0207 , MF	ANY
	R....73	57.11.3473	47 k	1%, 0207 , MF	ANY
	R....74	57.11.3473	47 k	1%, 0207 , MF	ANY
	R....75	57.11.3471	470	1% 0207 , MF	ANY
	R....76	57.11.3471	470	1% 0207 , MF	ANY
	R....77	57.11.3751	750	1%, 0207 , MF	ANY
	R....78	57.11.3241	240	1%, 0207 , MF	ANY
	R....79	57.11.3751	750	1%, 0207 , MF	ANY
	R....80	57.11.3241	240	1%, 0207 , MF	ANY
	R....81	57.11.3471	470	1% 0207 , MF	ANY
	R....82	57.11.3473	47 k	1%, 0207 , MF	ANY
	R....83	57.11.3473	47 k	1%, 0207 , MF	ANY
	R....84	57.11.3472	4.7 k	1%, 0207 , MF	ANY
	R....85	57.11.3102	1 k	1%, 0207 , MF	ANY
	R....86	57.11.5106	10 M	10%,0207 , MF	ANY
	R....87	57.11.3820	82	1%, 0207 , MF	ANY
	R....88	57.11.3182	1.8 k	1%, 0207 , MF	ANY
	R....89	57.11.3472	4.7 k	1%, 0207 , MF	ANY
	R....90	57.11.3472	4.7 k	1%, 0207 , MF	ANY
	R....91	57.11.3101	100	1%, 0207 , MF	ANY
	R....92	57.11.3472	4.7 k	1%, 0207 , MF	ANY
	R....93	57.11.3102	1 k	1%, 0207 , MF	ANY
	R....94	57.11.3471	470	1% 0207 , MF	ANY
	R....95	57.11.3820	82	1% 0207 , MF	ANY
	R....96	57.11.3822	8.2 k	1%, 0207 , MF	ANY
	R....97	57.11.3102	1 k	1%, 0207 , MF	ANY
	R....98	57.11.3102	1 k	1%, 0207 , MF	ANY
	R....99	57.11.3103	10 k	1%, 0207 , MF	ANY
	R...100	57.11.3102	1 k	1%, 0207 , MF	ANY

STUDER (00) 91/14/02 LAR CLOCK BOARD PL 1.862.660.22 PAGE 12

CLOCK BOARD 1.862.660.22

IND.	POS.NO.	PART NO.	VALUE	SPECIFICATIONS / EQUIVALENT	MANUF.
	R...101	57.11.3101	100	1%, 0207 , MF	ANY
	R...102	57.11.3103	10 k	1%, 0207 , MF	ANY
	R...103	57.11.3103	10 k	1%, 0207 , MF	ANY
	R...104	57.11.3103	10 k	1%, 0207 , MF	ANY
	R...105	57.11.3103	10 k	1%, 0207 , MF	ANY
	R...106	57.11.3102	1 k	1%, 0207 , MF	ANY
	R...107	57.11.3392	3.9 k	1%, 0207 , MF	ANY
	R...108	57.11.3153	15 k	1%, 0207 , MF	ANY
	R...109	57.11.3102	1 k	1%, 0207 , MF	ANY
	R...110	57.11.3471	470	1% 0207 , MF	ANY
	R...111	57.11.3102	1 k	1%, 0207 , MF	ANY
	R...112	57.11.3101	100	1%, 0207 , MF	ANY
	R...113	57.11.3223	22 k	1%, 0207 , MF	ANY
	R...114	57.11.3751	750	1%, 0207 , MF	ANY
	R...115	57.11.3241	240	1%, 0207 , MF	ANY
	R...116	57.11.3682	6.8 k	1%, 0207 , MF	ANY
	R...117	57.11.3101	100	1%, 0207 , MF	ANY
	R...118	57.11.3184	180 k	1%, 0207 , MF	ANY
	R...119	57.11.3103	10 k	1%, 0207 , MF	ANY
	R...120	57.11.3243	24 k	1%, 0207 , MF	ANY
	R...121	57.11.3153	15 k	1%, 0207 , MF	ANY
	R...122	57.11.3473	47 k	1%, 0207 , MF	ANY
	R...123	57.11.3473	47 k	1%, 0207 , MF	ANY
	R...124	57.11.3153	15 k	1%, 0207 , MF	ANY
	R...125	57.11.3243	24 k	1%, 0207 , MF	ANY
	R...126	57.11.3751	750	1%, 0207 , MF	ANY
	R...127	57.11.3241	240	1%, 0207 , MF	ANY
	R...128	57.11.3101	100	1%, 0207 , MF	ANY
	R...129	57.11.3151	150	1%, 0207 , MF	ANY
	R...130	57.11.3271	270	1%, 0207 , MF	ANY
	R...131	57.11.3271	270	1%, 0207 , MF	ANY
	R...132	57.11.3271	270	1%, 0207 , MF	ANY
	R...133	57.11.3271	270	1%, 0207 , MF	ANY
	R...134	57.11.3271	270	1%, 0207 , MF	ANY
	R...135	57.11.3271	270	1%, 0207 , MF	ANY
	R...136	57.11.3271	270	1%, 0207 , MF	ANY
	R...137	57.11.3271	270	1%, 0207 , MF	ANY

IND.	POS.NO.	PART NO.	VALUE	SPECIFICATIONS / EQUIVALENT	MANUF.
	R...138	57.11.3271	270	1%, 0207 , MF	ANY
	R...139	57.11.3271	270	1%, 0207 , MF	ANY
	R...140	57.11.3101	100	1%, 0207 , MF	ANY
	R...141	57.11.3125	12 k	1%, 0207 , MF	ANY
	RA....1	58.05.0103	10 k	10%, .5 W , PMS	ANY
	RA....2	58.05.0103	10 k	10%, .5 W , PMS	ANY
	T.....1	1.726.250.21		IF-COIL 3.1	St
	TP....1	54.02.0320		TESTPOINT	ANY
	TP....2	54.02.0320		TESTPOINT	ANY
	TP....3	54.02.0320		TESTPOINT	ANY
	TP....4	54.02.0320		TESTPOINT	ANY
	TP....5	54.02.0320		TESTPOINT	ANY
	TP....6	54.02.0320		TESTPOINT	ANY
	TP....7	54.02.0320		TESTPOINT	ANY
	TP....8	54.02.0320		TESTPOINT	ANY
	XF....1	53.03.0118	5 * 20	FUSE-HOLDER	ANY
	XF....2	53.03.0118	5 * 20	FUSE-HOLDER	ANY
	XIC...2	53.03.0168		DIL 16-POL	ANY
	XIC...3	53.03.0168		DIL 16-POL	ANY
	XIC...6	53.03.0168		DIL 16-POL	ANY
	XIC...7	53.03.0168		DIL 16-POL	ANY
	XIC...8	53.03.0165		DIL 20-POL	ANY
	XIC...9	53.03.0168		DIL 16-POL	ANY
	XIC..10	53.03.0173		DIL 28-POL	ANY
	XIC..12	53.03.0166		DIL 8-POL	ANY
	XIC..13	53.03.0165		DIL 20-POL	ANY
	XIC..14	53.03.0165		DIL 20-POL	ANY
	XIC..15	53.03.0165		DIL 20-POL	ANY
	XIC..16	53.03.0165		DIL 20-POL	ANY
	XIC..22	53.03.0173		DIL 28-POL	ANY
	XIC..27	53.03.0165		DIL 20-POL	ANY
	XIC..29	53.03.0165		DIL 20-POL	ANY

IND.	POS.NO.	PART NO.	VALUE	SPECIFICATIONS / EQUIVALENT	MANUF.
	XIC..33	53.03.0165		DIL 20-POL	ANY
	XIC..57	53.03.0165		DIL 20-POL	ANY
	XIC..72	53.03.0165		DIL 20-POL	ANY
	XIC..76	53.03.0165		DIL 20-POL	ANY
	Y.....1	89.01.0590		Y-OSC 18.4326 MHZ, SPEZ.	ANY

REMARKS:
21: SW-Aenderung SW 1.862.832.21 (IC 72) 05.03.90
22: SW-Aenderung SW 1.862.832.22 (IC 72) 14.02.91
22: SW-Aenderung SW 1.862.833.21 (IC 76) 14.02.91
22: Neu: C 169, C170, C171 14.02.91

MANUFACTURERS:
St = STUDER, Ph = PHILIPS, BB = BURR BROWN, Ha = HARRIS, Pi = PHOTOCHEMIE

ABBREVIATIONS:
CER = CERAMIC / FILM = FILM TYPE / XF = CLAMP FOR FUSES /
XIC = IC SOCKET

ORIG 91/14/02

BLOCK DIAGRAM CUE MODULATOR

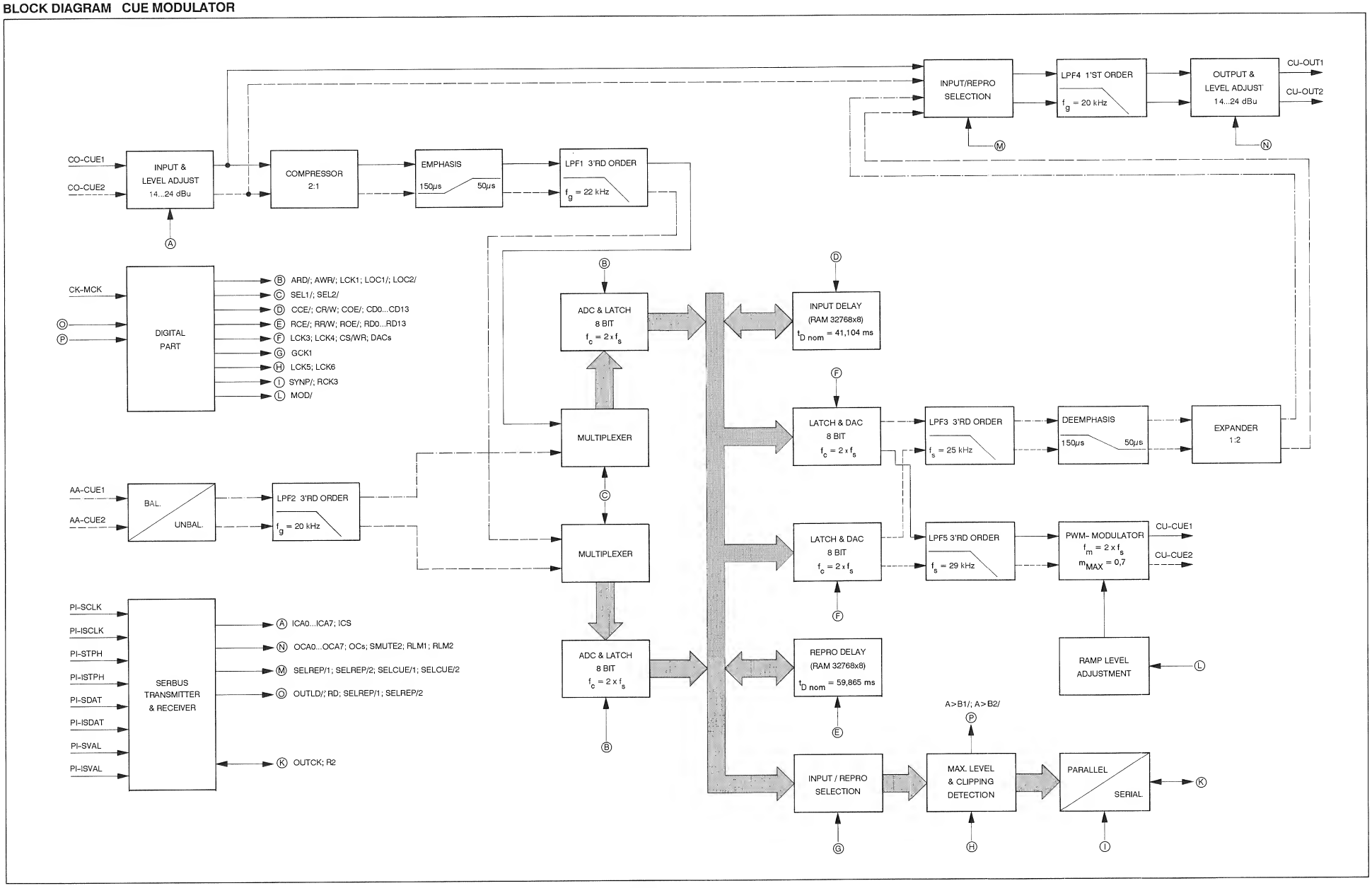

CUE MODULATOR 1.862.661.20

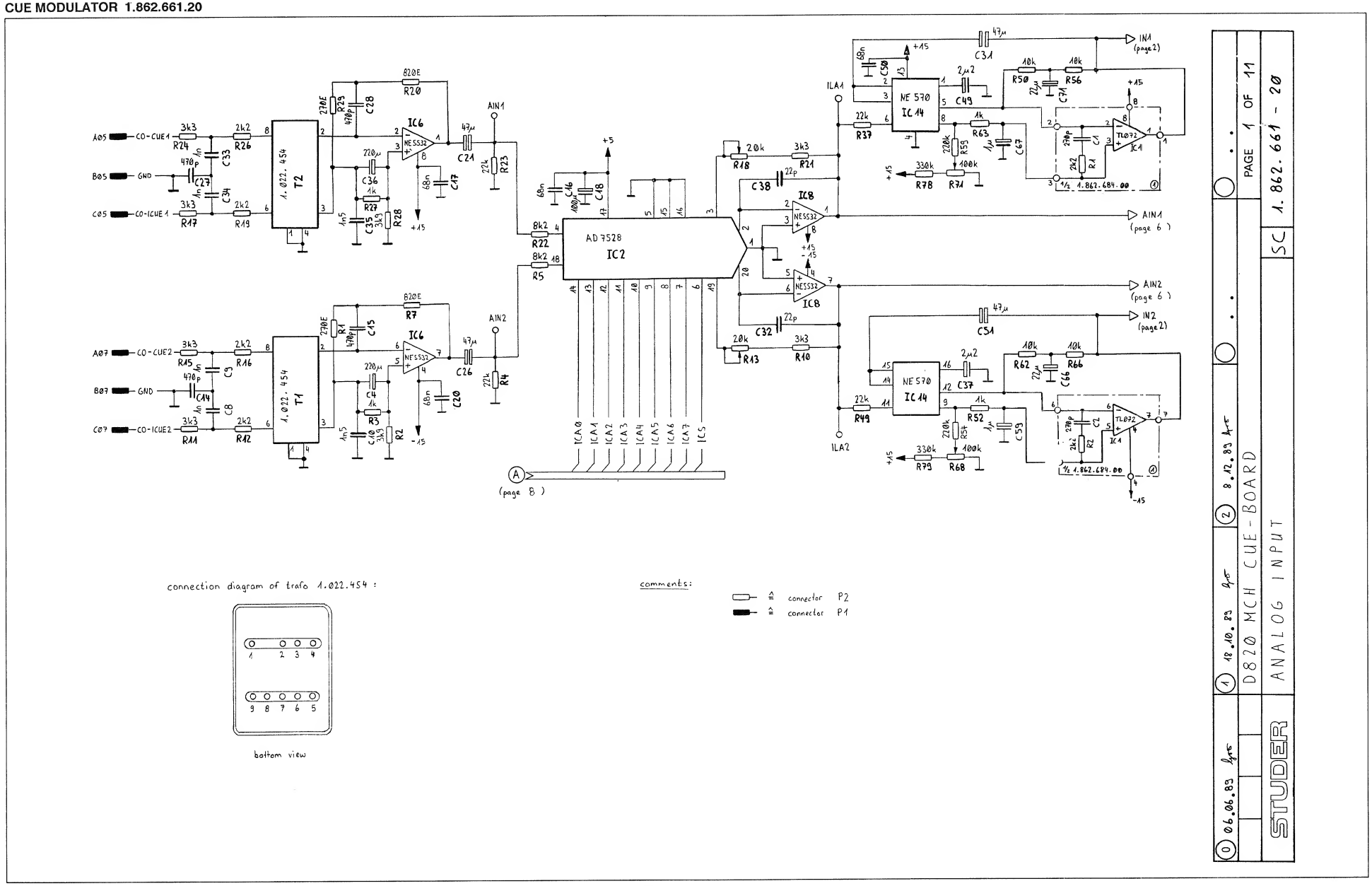

connection diagram of trafo 1.022.454 :

bottom view

comments:

≙ connector P2

≙ connector P1

CUE MODULATOR 1.862.661.20

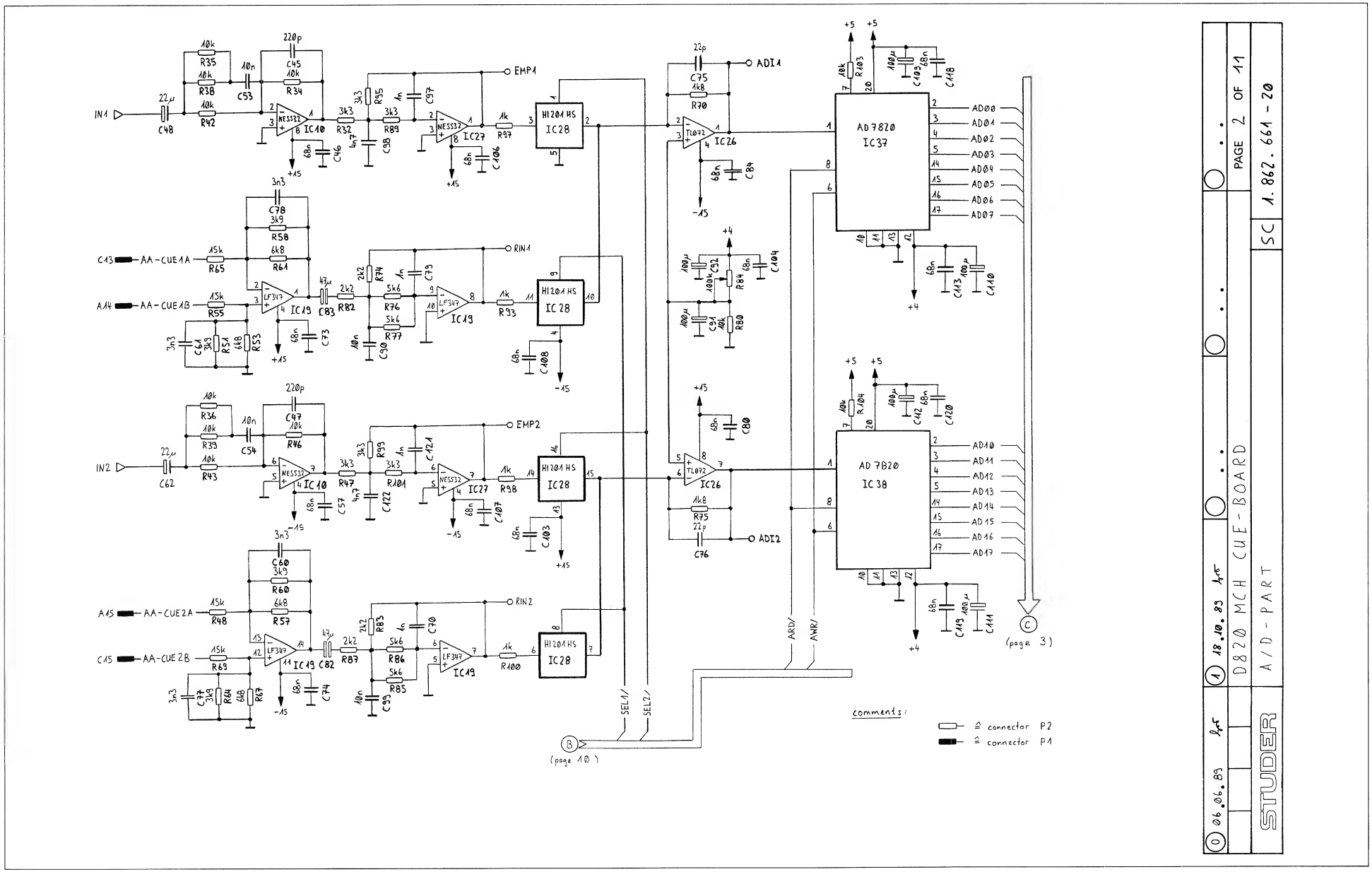

CUE MODULATOR 1.862.661.20

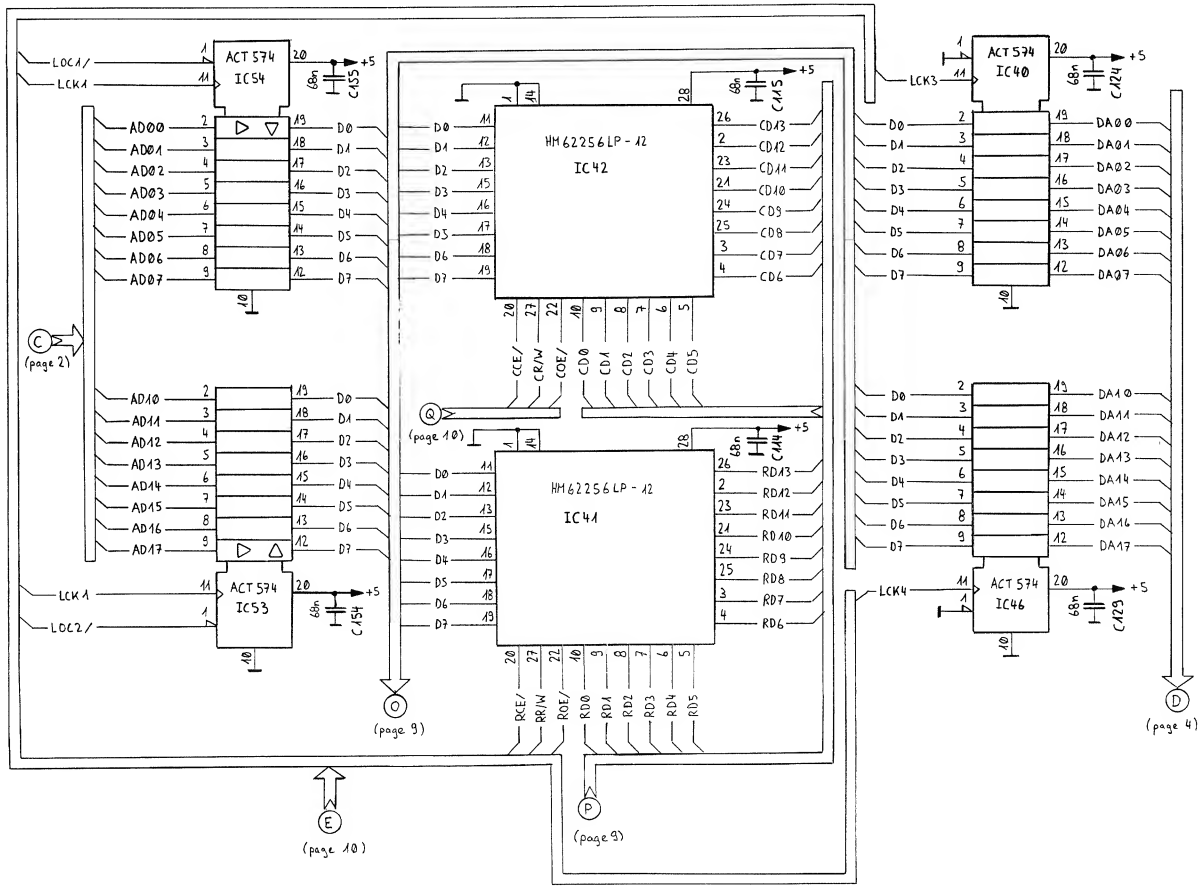

0 06.06.89	D820 MCH CUE-BOARD	PAGE 3 OF 11
STUDER	DELAY-PART	SC 1.862.661-20

CUE MODULATOR 1.862.661.20

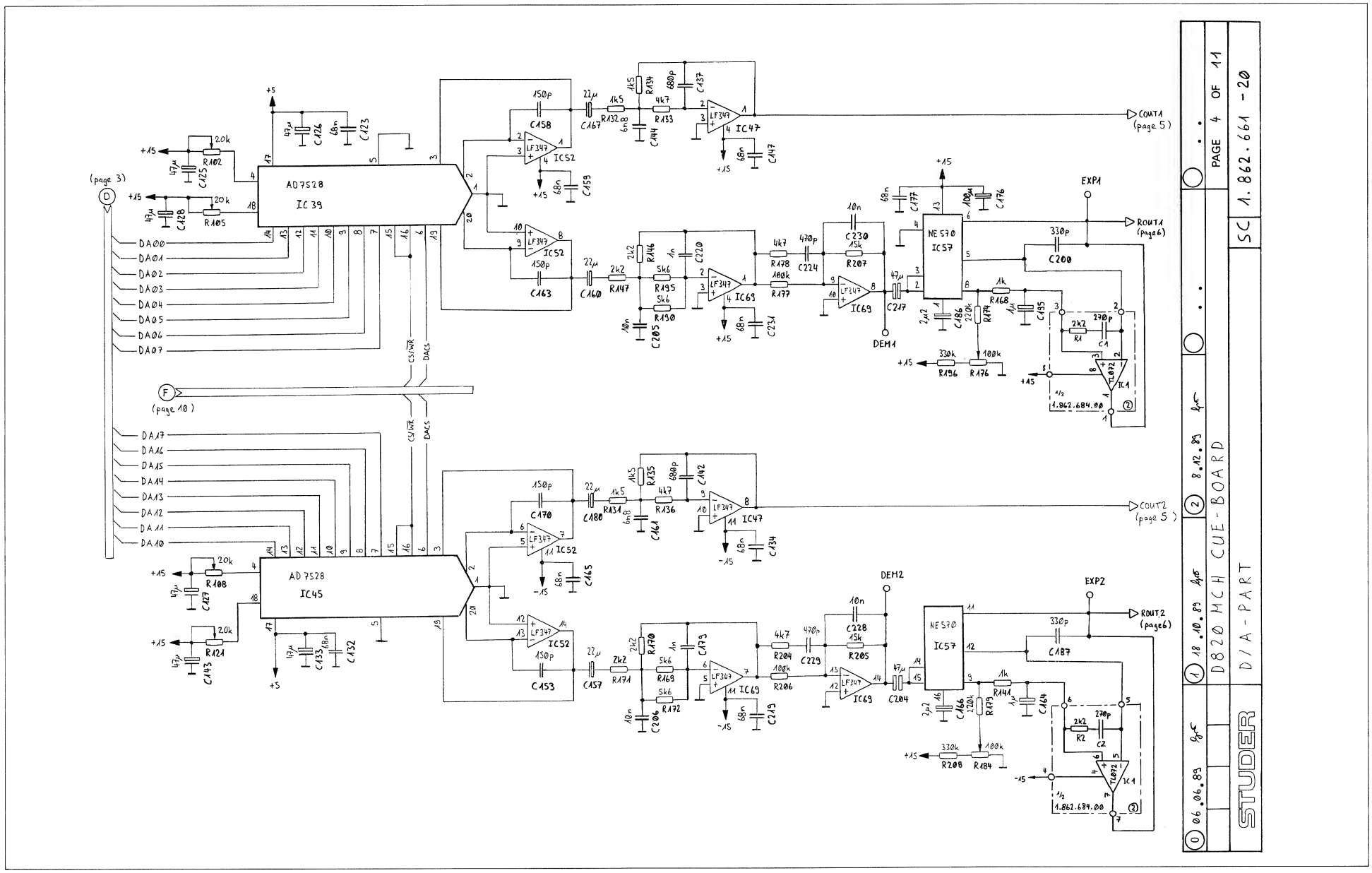

CUE MODULATOR 1.862.661.20

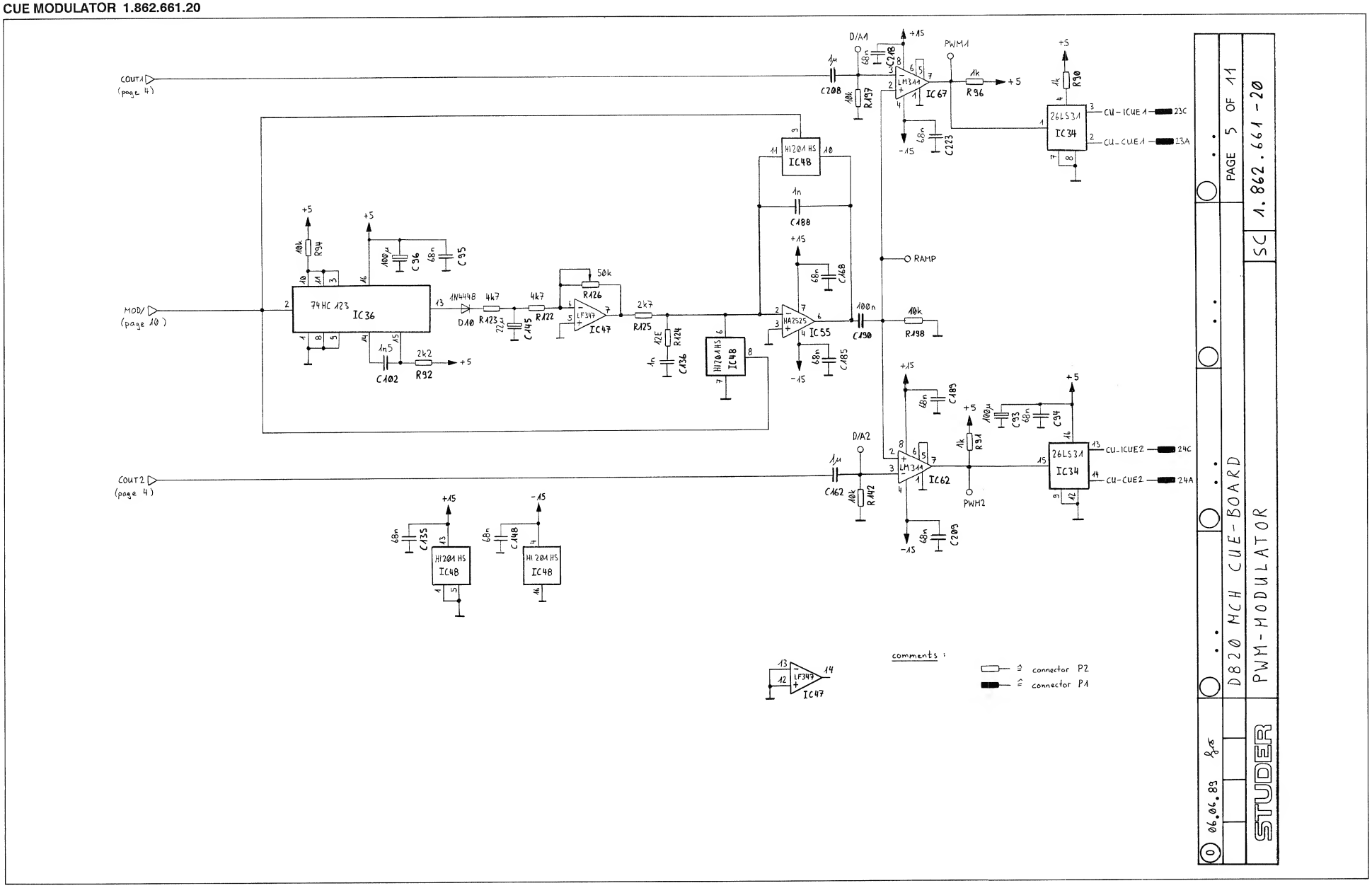

CUE MODULATOR 1.862.661.20

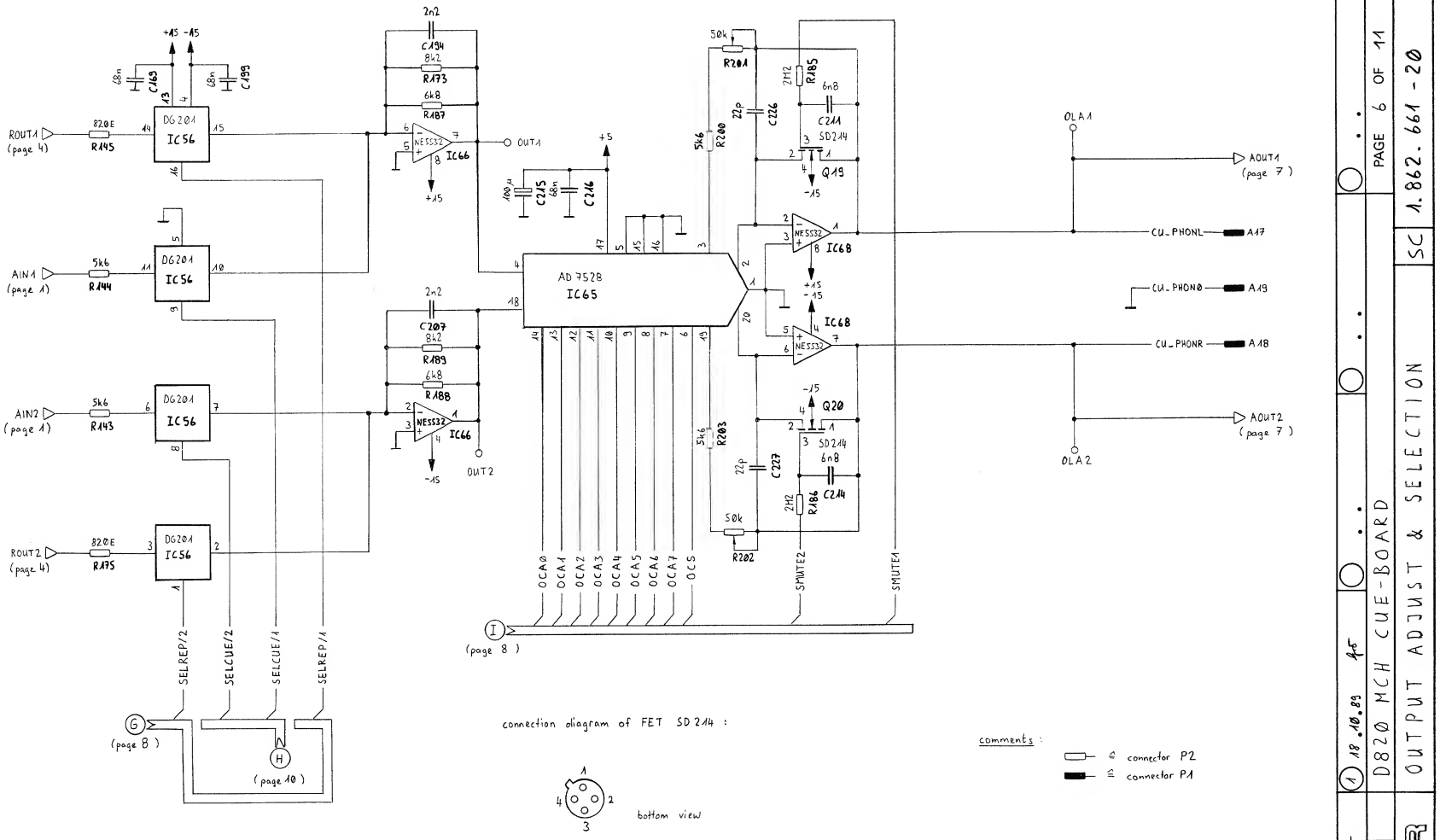

CUE MODULATOR 1.862.661.20

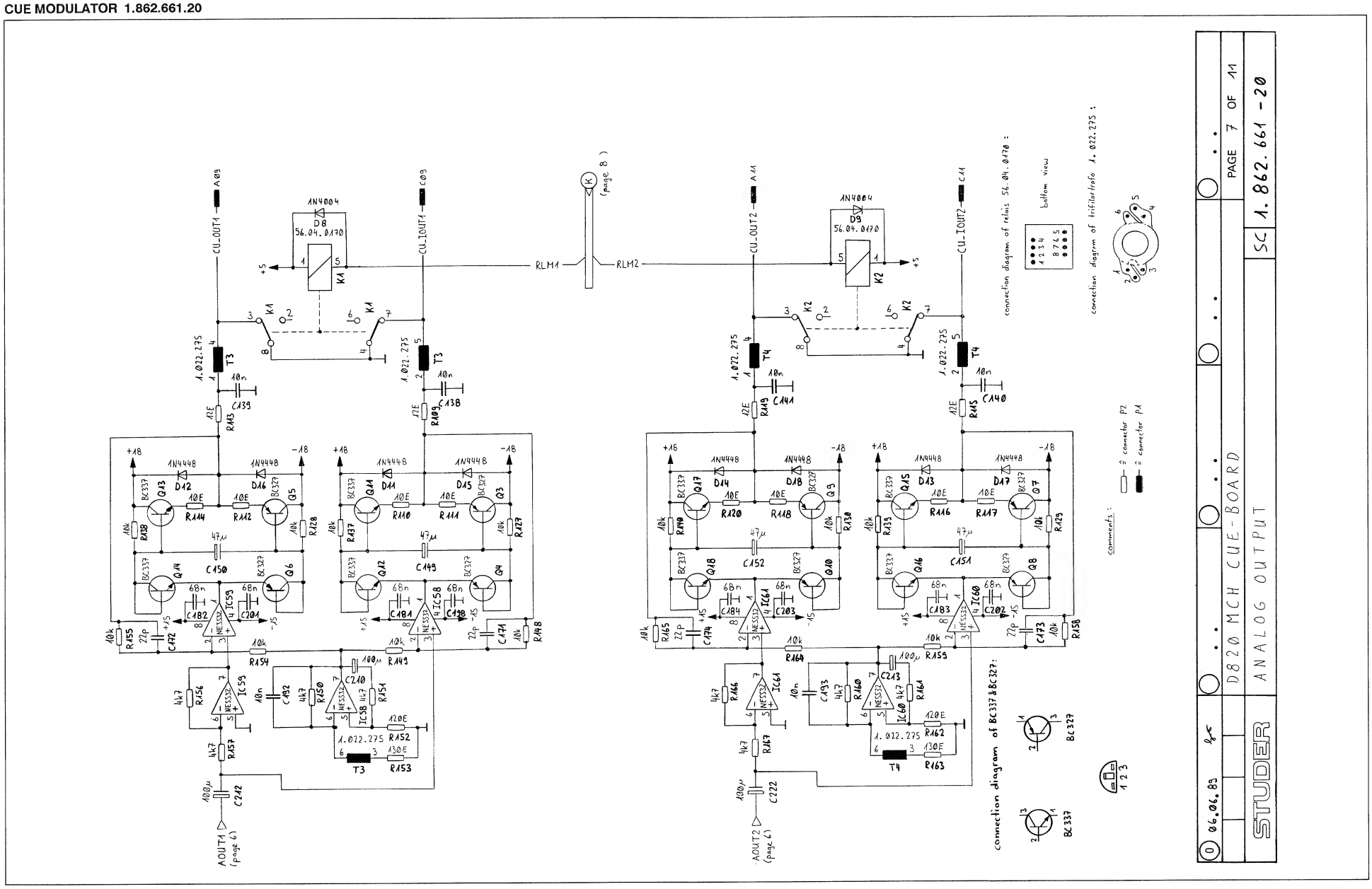

CUE MODULATOR 1.862.661.20

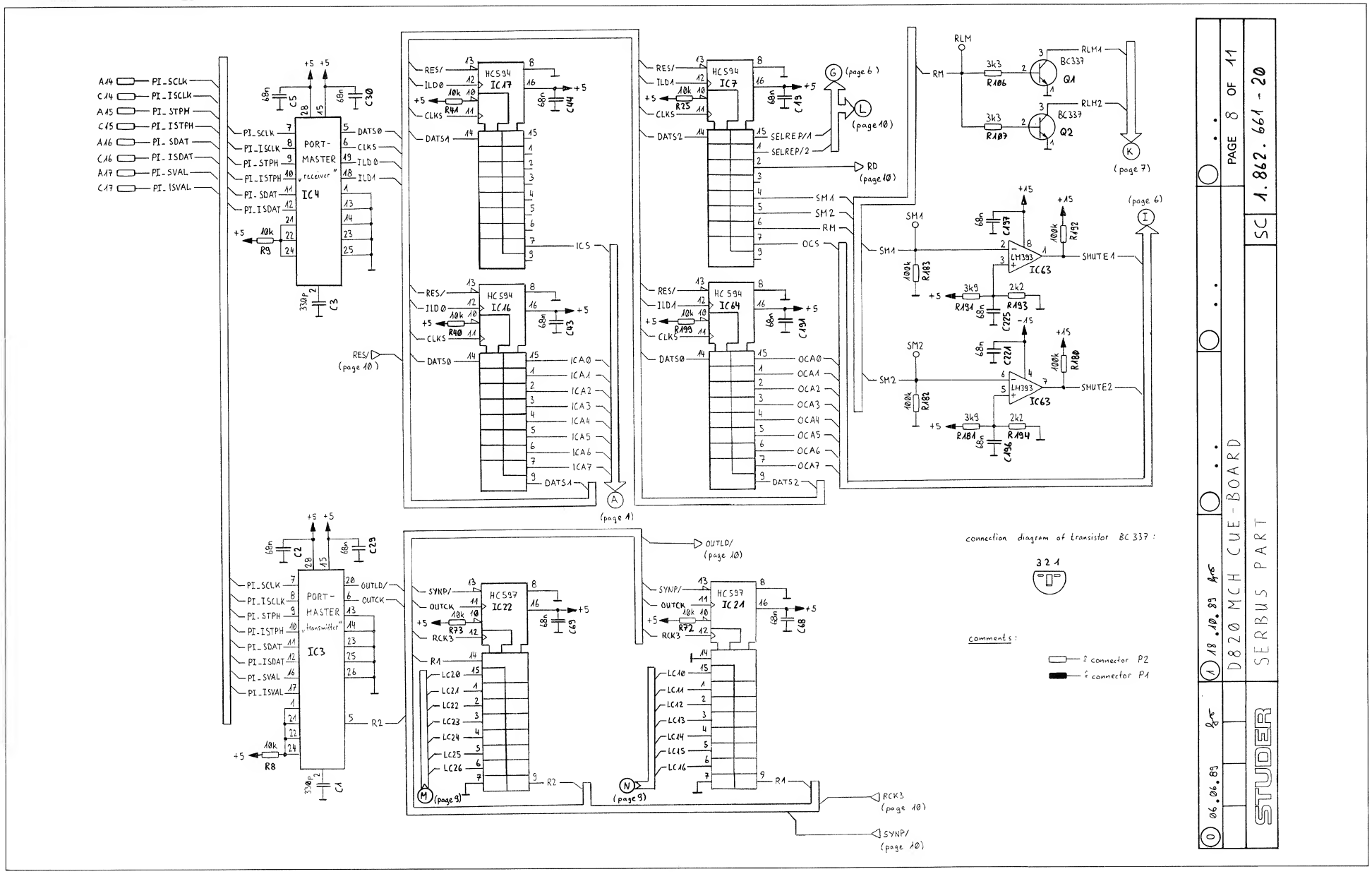

CUE MODULATOR 1.862.661.20

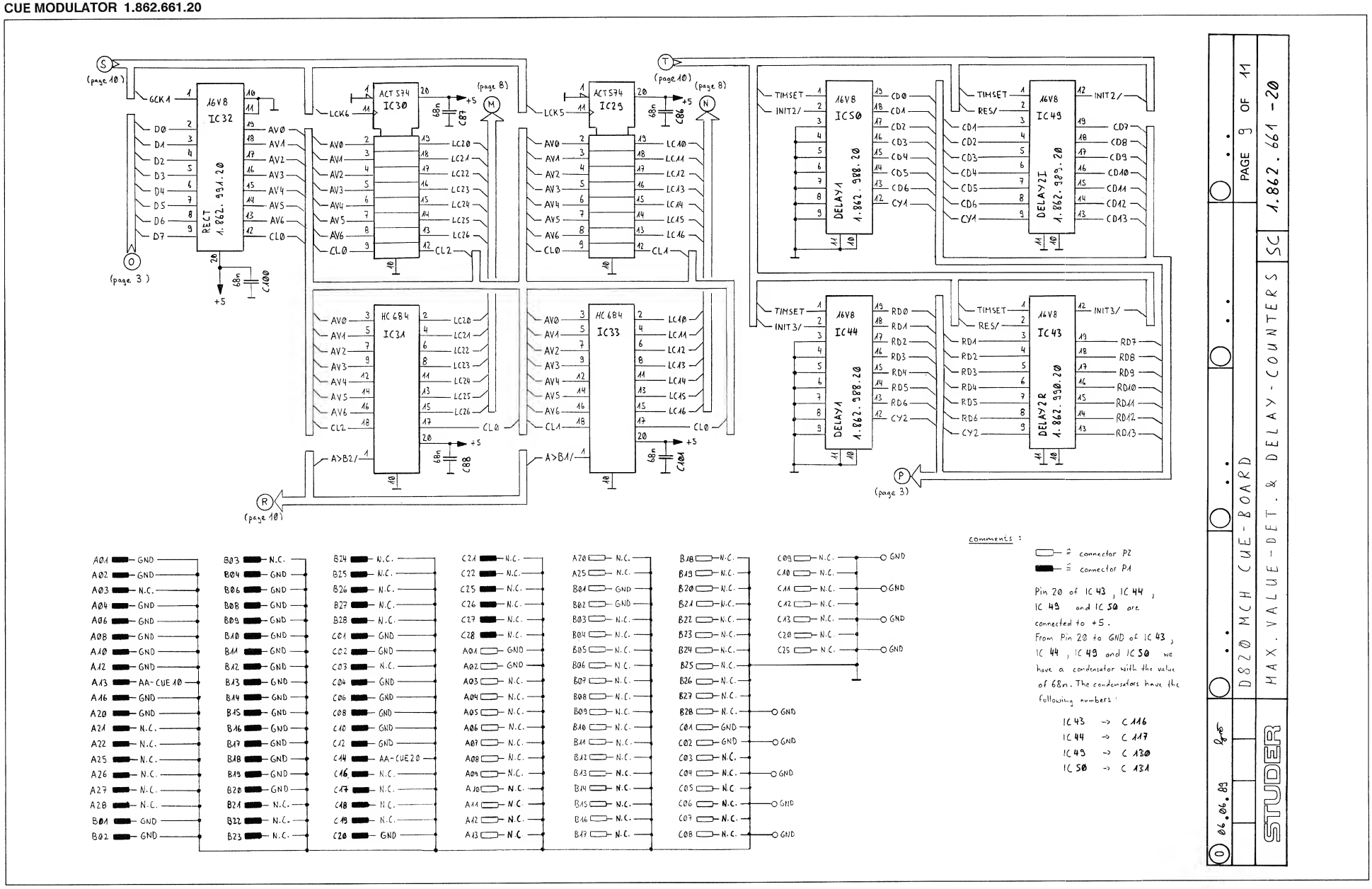

CUE MODULATOR 1.862.661.20

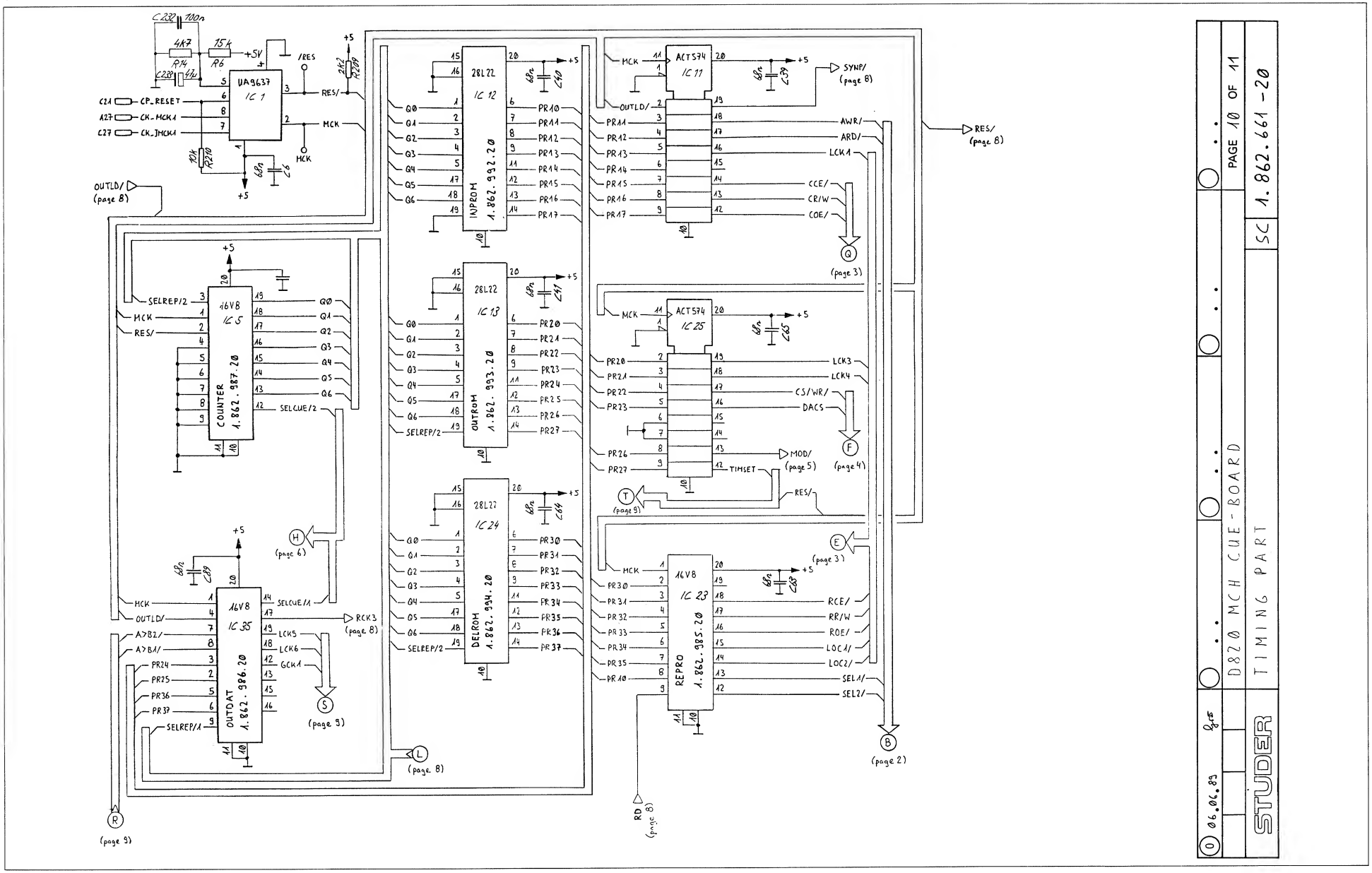

CUE MODULATOR 1.862.661.20

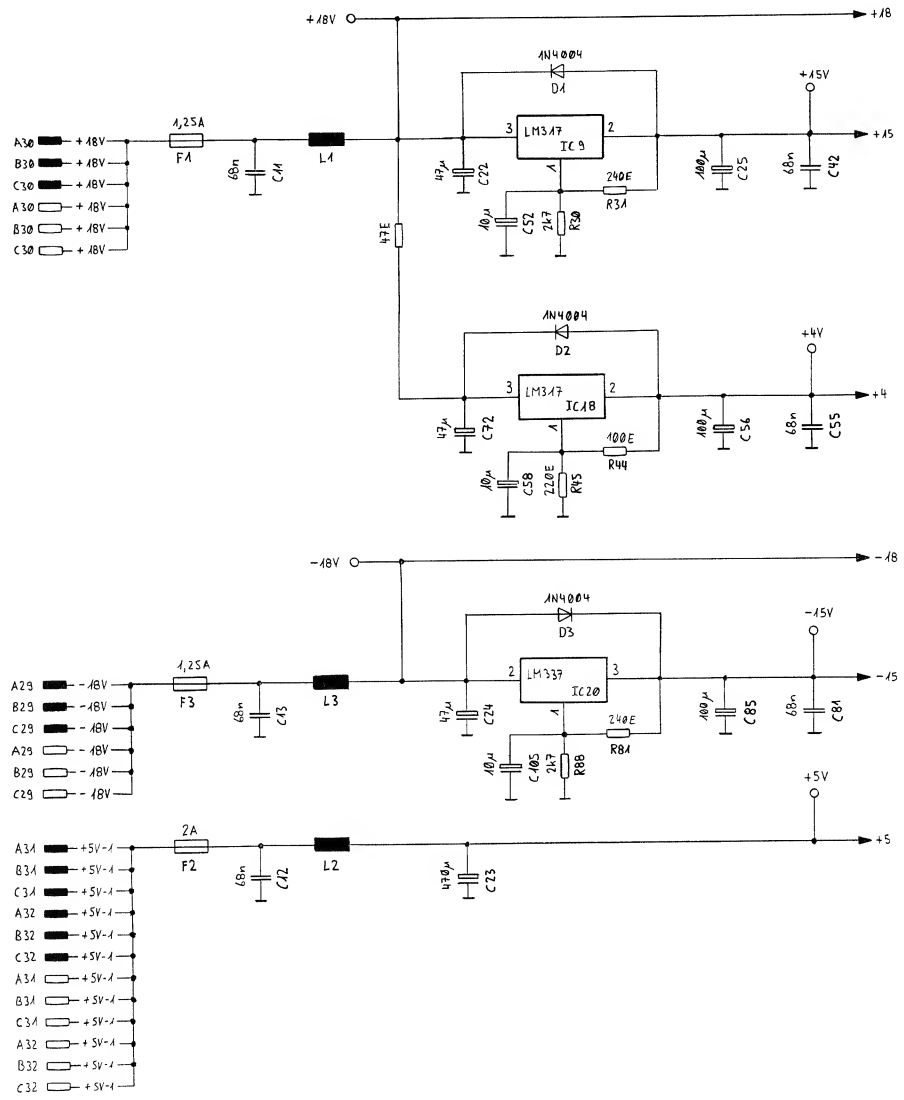

connection diagram of LM317 & LM337 (TO220):

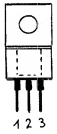

comments :

- connector P1
- connector P2

0	06.06.89	D820 MCH CUE-BOARD	PAGE 11 OF 11
		POWER SUPPLIES	SC 1.862.661-20
		STUDER	

CUE MODULATOR 1.862.661.20

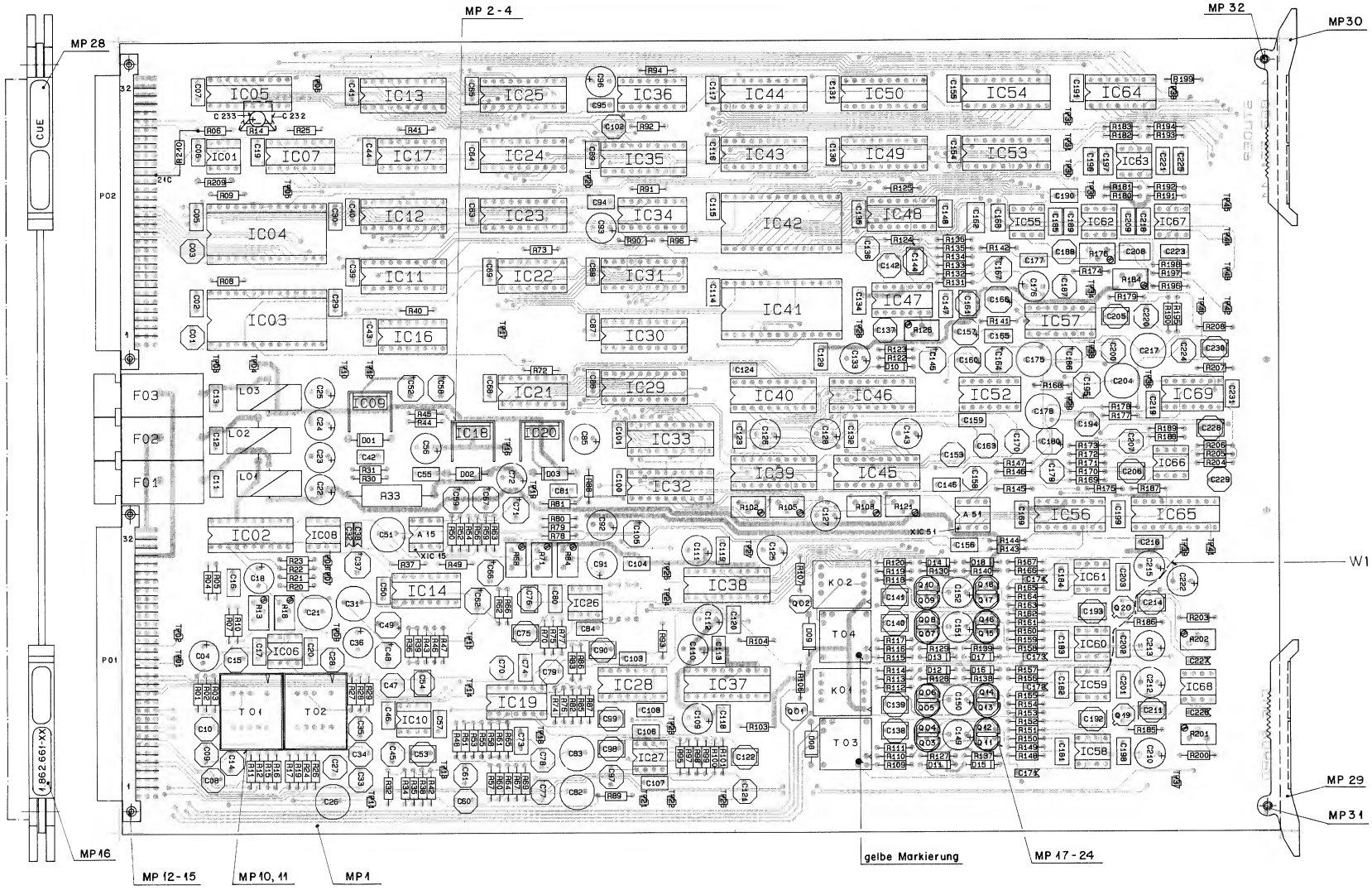

Schilder MP 5, 6, 7, 8, 9
aufgeklebt nach Fabrikationsmuster.

IC-Sockel nach PL bestückt
z.B. XIC 43 = Sockel von IC 43

C 232 auf Lötseite

CUE MODULATOR 1.862.661.20

IND.	POS.NO.	PART NO.	VALUE	SPECIFICATIONS / EQUIVALENT	MANUF.
(04)	A....15	1.862.684.00		CUE PIGGI BACK	St
(04)	A....51	1.862.684.00		CUE PIGGI BACK	St
	C.....1	59.34.4331	330 p	5% , 10V	ANY
	C.....2	59.06.0683	68 n	20% , 10V	ANY
	C.....3	59.34.4331	330 p	5% , 10V	ANY
	C.....4	59.22.2221	220 u	20% , 3V , EL	ANY
	C.....5	59.06.0683	68 n	20% , 10V	ANY
	C.....6	59.06.0683	68 n	20% , 10V	ANY
	C.....7	59.06.0683	68 n	20% , 10V	ANY
	C.....8	59.05.1102	1 n	1% , 100V , PP	ANY
	C.....9	59.05.1102	1 n	1% , 100V , PP	ANY
	C....10	59.05.1152	1.5 n	1% , 20V , PP	ANY
	C....11	59.06.0683	68 n	20% , 25V	ANY
	C....12	59.06.0683	68 n	20% , 25V	ANY
	C....13	59.06.0683	68 n	20% , 25V	ANY
	C....14	59.05.2471	470 p	2.5%, 500V , PP	ANY
	C....15	59.05.1471	470 p	1% , 40V , PP	ANY
	C....16	59.06.0683	68 n	20% , 10V	ANY
	C....17	59.06.0683	68 n	20% , 20V	ANY
	C....18	59.22.3101	100 u	20% , 10V , EL	ANY
	C....19	59.06.0683	68 n	20% , 10V	ANY
	C....20	59.06.0683	68 n	20% , 20V	ANY
	C....21	59.99.0401	47 u	20% , 16V , bipolar	ANY
	C....22	59.22.5470	47 u	20% , 25V , EL	ANY
	C....23	59.22.3471	470 u	20% , 10V , EL	ANY
	C....24	59.22.5470	47 u	20% , 25V , EL	ANY
	C....25	59.22.5101	100 u	20% , 25V , EL	ANY
	C....26	59.99.0401	47 u	20% , 16V , bipolar	ANY
	C....27	59.05.2471	470 p	2.5%, 500V , PP	ANY
	C....28	59.05.1471	470 p	1% , 40V , PP	ANY
	C....29	59.06.0683	68 n	20% , 10V	ANY
	C....30	59.06.0683	68 n	20% , 10V	ANY
	C....31	59.99.0401	47 u	20% , 16V , bipolar	ANY
	C....32	59.34.2220	22 p	5% , 25V , CER	ANY
	C....33	59.05.1102	1 n	1% , 100V , PP	ANY
	C....34	59.05.1102	1 n	1% , 100V , PP	ANY

IND.	POS.NO.	PART NO.	VALUE	SPECIFICATIONS / EQUIVALENT	MANUF.
	C....35	59.05.1152	1.5 n	1% , 25V , PP	ANY
	C....36	59.22.2221	220 u	20% , 3V , EL	ANY
	C....37	59.22.8229	2.2 u	20% , 25V , EL	ANY
	C....38	59.34.2220	22 p	5% , 25V , CER	ANY
	C....39	59.06.0683	68 n	20% , 10V	ANY
	C....40	59.06.0683	68 n	20% , 10V	ANY
	C....41	59.06.0683	68 n	20% , 10V	ANY
	C....42	59.06.0683	68 n	20% , 20V	ANY
	C....43	59.06.0683	68 n	20% , 10V	ANY
	C....44	59.06.0683	68 n	20% , 10V	ANY
	C....45	59.05.2221	220 p	2.5%, 25V , PP	ANY
	C....46	59.06.0683	68 n	20% , 20V	ANY
	C....47	59.05.2221	220 p	2.5%, 25V , PP	ANY
	C....48	59.22.5220	22 u	20% , 25V , EL	ANY
	C....49	59.22.8229	2.2 u	20% , 25V , EL	ANY
	C....50	59.06.0683	68 n	20% , 20V	ANY
	C....51	59.99.0401	47 u	20% , 16V , bipolar	ANY
	C....52	59.22.6100	10 u	20% , 25V , EL	ANY
	C....53	59.05.2103	10 n	2.5%, 25V , PP	ANY
	C....54	59.05.2103	10 n	2.5%, 25V , PP	ANY
	C....55	59.06.0683	68 n	20% , 10V	ANY
	C....56	59.22.3101	100 u	20% , 10V , EL	ANY
	C....57	59.06.0683	68 n	20% , 20V	ANY
	C....58	59.22.6100	10 u	20% , 25V , EL	ANY
	C....59	59.22.8109	1 u	20% , 25V , EL	ANY
	C....60	59.05.2332	3.3 n	2.5%, 40V , PP	ANY
	C....61	59.05.2332	3.3 n	2.5%, 40V , PP	ANY
	C....62	59.22.5220	22 u	20% , 25V , EL	ANY
	C....63	59.06.0683	68 n	20% , 10V	ANY
	C....64	59.06.0683	68 n	20% , 10V	ANY
	C....65	59.06.0683	68 n	20% , 10V	ANY
	C....66	59.22.5220	22 u	20% , 25V , EL	ANY
	C....67	59.22.8109	1 u	20% , 25V , EL	ANY
	C....68	59.06.0683	68 n	20% , 10V	ANY
	C....69	59.06.0683	68 n	20% , 10V	ANY
	C....70	59.05.2102	1 n	2.5%, 25V , PP	ANY
	C....71	59.22.5220	22 u	20% , 25V , EL	ANY

IND.	POS.NO.	PART NO.	VALUE	SPECIFICATIONS / EQUIVALENT	MANUF.
	C....72	59.22.5470	47 u	20% , 25V , EL	ANY
	C....73	59.06.0683	68 n	20% , 20V	ANY
	C....74	59.06.0683	68 n	20% , 20V	ANY
	C....75	59.34.2220	22 p	2.5%, 20V , PP	ANY
	C....76	59.34.2220	22 p	2.5%, 20V , PP	ANY
	C....77	59.05.2332	3.3 n	2.5%, 40V , PP	ANY
	C....78	59.05.2332	3.3 n	2.5%, 40V , PP	ANY
	C....79	59.05.2102	1 n	2.5%, 25V , PP	ANY
	C....80	59.06.0683	68 n	20% , 20V	ANY
	C....81	59.06.0683	68 n	20% , 20V	ANY
	C....82	59.99.0401	47 u	10% , 16V , bipolar	ANY
	C....83	59.99.0401	47 u	10% , 16V , bipolar	ANY
	C....84	59.06.0683	68 n	20% , 20V	ANY
	C....85	59.22.5101	100 u	20% , 25V , EL	ANY
	C....86	59.06.0683	68 n	20% , 10V	ANY
	C....87	59.06.0683	68 n	20% , 10V	ANY
	C....88	59.06.0683	68 n	20% , 10V	ANY
	C....89	59.06.0683	68 n	20% , 10V	ANY
	C....90	59.05.2103	10 n	2.5%, 25V , PP	ANY
	C....91	59.22.3101	100 u	20% , 10V , EL	ANY
	C....92	59.22.3101	100 u	20% , 10V , EL	ANY
	C....93	59.22.3101	100 u	20% , 10V , EL	ANY
	C....94	59.06.0683	68 n	20% , 10V	ANY
	C....95	59.06.0683	68 n	20% , 10V	ANY
	C....96	59.22.3101	100 u	20% , 10V , EL	ANY
	C....97	59.05.2102	1 n	2.5%, 25V , PP	ANY
	C....98	59.05.2472	4.7 n	2.5%, 25V , PP	ANY
	C....99	59.05.2103	10 n	2.5%, 25V , PP	ANY
	C...100	59.06.0683	68 n	20% , 10V	ANY
	C...101	59.06.0683	68 n	20% , 10V	ANY
	C...102	59.05.2152	1.5 n	2.5%, 10V , PP	ANY
	C...103	59.06.0683	68 n	20% , 20V	ANY
	C...104	59.06.0683	68 n	20% , 10V	ANY
	C...105	59.22.6100	10 u	20% , 25V , EL	ANY
	C...106	59.06.0683	68 n	20% , 20V	ANY
	C...107	59.06.0683	68 n	20% , 20V	ANY
	C...108	59.06.0683	68 n	20% , 20V	ANY

IND.	POS.NO.	PART NO.	VALUE	SPECIFICATIONS / EQUIVALENT	MANUF.
	C...109	59.22.3101	100 u	20% , 10V , EL	ANY
	C...110	59.22.3101	100 u	20% , 10V , EL	ANY
	C...111	59.22.3101	100 u	20% , 10V , EL	ANY
	C...112	59.22.3101	100 u	20% , 10V , EL	ANY
	C...113	59.06.0683	68 n	20% , 10V	ANY
	C...114	59.06.0683	68 n	20% , 10V	ANY
	C...115	59.06.0683	68 n	20% , 10V	ANY
	C...116	59.06.0683	68 n	20% , 10V	ANY
	C...117	59.06.0683	68 n	20% , 10V	ANY
	C...118	59.06.0683	68 n	20% , 10V	ANY
	C...119	59.06.0683	68 n	20% , 10V	ANY
	C...120	59.06.0683	68 n	20% , 10V	ANY
	C...121	59.05.2102	1 n	2.5%, 25V , PP	ANY
	C...122	59.05.2472	4.7 n	2.5%, 25V , PP	ANY
	C...123	59.06.0683	68 n	20% , 10V	ANY
	C...124	59.06.0683	68 n	20% , 10V	ANY
	C...125	59.22.5470	47 u	20% , 25V , EL	ANY
	C...126	59.22.3470	47 u	20% , 10V , EL	ANY
	C...127	59.22.5470	47 u	20% , 25V , EL	ANY
	C...128	59.22.5470	47 u	20% , 25V , EL	ANY
	C...129	59.06.0683	68 n	20% , 10V	ANY
	C...130	59.06.0683	68 n	20% , 10V	ANY
	C...131	59.06.0683	68 n	20% , 10V	ANY
	C...132	59.06.0683	68 n	20% , 10V	ANY
	C...133	59.22.3470	47 u	20% , 10V , EL	ANY
	C...134	59.06.0683	68 n	20% , 20V	ANY
	C...135	59.06.0683	68 n	20% , 20V	ANY
	C...136	59.05.2102	1 n	2.5%, 25V , PP	ANY
	C...137	59.05.2681	680 p	2.5%, 25V , PP	ANY
	C...138	59.05.2103	10 n	2.5%, 25V , PP	ANY
	C...139	59.05.2103	10 n	2.5%, 25V , PP	ANY
	C...140	59.05.2103	10 n	2.5%, 25V , PP	ANY
	C...141	59.05.2103	10 n	2.5%, 25V , PP	ANY
	C...142	59.05.2681	680 p	2.5%, 25V , PP	ANY
	C...143	59.22.5470	47 u	20% , 25V , EL	ANY
	C...144	59.05.2682	6.8 n	2.5%, 25V , PP	ANY
	C...145	59.22.5220	22 u	20% , 25V , EL	ANY

IND.	POS.NO.	PART NO.	VALUE	SPECIFICATIONS / EQUIVALENT	MANUF.
	C...146	59.06.0683	68 n	20% , 20V	ANY
	C...147	59.06.0683	68 n	20% , 20V	ANY
	C...148	59.06.0683	68 n	20% , 20V	ANY
	C...149	59.22.6470	47 u	20% , 40V , EL	ANY
	C...150	59.22.6470	47 u	20% , 40V , EL	ANY
	C...151	59.22.6470	47 u	20% , 40V , EL	ANY
	C...152	59.22.6470	47 u	20% , 40V , EL	ANY
	C...153	59.05.2151	150 p	2.5%, 25V , PP	ANY
	C...154	59.06.0683	68 n	20% , 10V	ANY
	C...155	59.06.0683	68 n	20% , 10V	ANY
	C...156	59.06.0683	68 n	20% , 20V	ANY
	C...157	59.22.5220	22 u	20% , 25V , EL	ANY
	C...158	59.05.2151	150 p	2.5%, 25V , PP	ANY
	C...159	59.06.0683	68 n	20% , 20V	ANY
	C...160	59.22.5220	22 u	20% , 25V , EL	ANY
	C...161	59.05.2682	6.8 n	2.5%, 25V , PP	ANY
	C...162	59.06.5105	1 u	20% , 25V , bipolar	ANY
	C...163	59.05.2151	150 p	2.5%, 25V , PP	ANY
	C...164	59.22.8109	1 u	20% , 25V , EL	ANY
	C...165	59.06.0683	68 n	20% , 20V	ANY
	C...166	59.22.8229	2.2 u	20% , 25V , EL	ANY
	C...167	59.22.5220	22 u	20% , 25V , EL	ANY
	C...168	59.06.0683	68 n	20% , 20V	ANY
	C...169	59.06.0683	68 n	20% , 20V	ANY
	C...170	59.05.2151	150 p	2.5%, 25V , PP	ANY
	C...171	59.34.2220	22 p	5% , 40V , CER	ANY
	C...172	59.34.2220	22 p	5% , 40V , CER	ANY
	C...173	59.34.2220	22 p	5% , 40V , CER	ANY
	C...174	59.34.2220	22 p	5% , 40V , CER	ANY
	C...175	59.99.0401	47 u	20% , 16V , bipolar	ANY
	C...176	59.22.5101	100 u	20% , 25V , EL	ANY
	C...177	59.06.0683	68 n	20% , 20V	ANY
	C...178	59.99.0401	47 u	20% , 16V , bipolar	ANY
	C...179	59.05.2102	1 n	2.5%, 25V , PP	ANY
	C...180	59.22.5220	22 u	20% , 25V , EL	ANY
	C...181	59.06.0683	68 n	20% , 20V	ANY
	C...182	59.06.0683	68 n	20% , 20V	ANY

IND.	POS.NO.	PART NO.	VALUE	SPECIFICATIONS / EQUIVALENT	MANUF.
	C...183	59.06.0683	68 n	20% , 20V	ANY
	C...184	59.06.0683	68 n	20% , 20V	ANY
	C...185	59.06.0683	68 n	20% , 20V	ANY
	C...186	59.22.8229	2.2 u	20% , 25V , EL	ANY
	C...187	59.05.2331	330 p	2.5%, 25V , PP	ANY
	C...188	59.05.2102	1 n	2.5%, 25V , PP	ANY
	C...189	59.06.0683	68 n	20% , 20V	ANY
	C...190	59.06.0104	100 n	10% , 25V , PETP	ANY
	C...191	59.06.0683	68 n	20% , 10V	ANY
	C...192	59.05.2103	10 n	2.5%, 40V , PP	ANY
	C...193	59.05.2103	10 n	2.5%, 40V , PP	ANY
	C...194	59.05.2222	2.2 n	2.5%, 25V , PP	ANY
	C...195	59.22.8109	1 u	20% , 25V , EL	ANY
	C...196	59.06.0683	68 n	20% , 10V	ANY
	C...197	59.06.0683	68 n	20% , 20V	ANY
	C...198	59.06.0683	68 n	20% , 20V	ANY
	C...199	59.06.0683	68 n	20% , 20V	ANY
	C...200	59.05.2331	330 p	2.5%, 25V , PP	ANY
	C...201	59.06.0683	68 n	20% , 20V	ANY
	C...202	59.06.0683	68 n	20% , 20V	ANY
	C...203	59.06.0683	68 n	20% , 20V	ANY
	C...204	59.99.0401	47 u	10% , 16V , bipolar	ANY
	C...205	59.05.2103	10 n	2.5%, 25V , PP	ANY
	C...206	59.05.2103	10 n	2.5%, 25V , PP	ANY
	C...207	59.05.2222	2.2 n	2.5%, 25V , PP	ANY
	C...208	59.06.5105	1 u	20% , 30V , bipolar	ANY
	C...209	59.06.0683	68 n	20% , 20V	ANY
	C...210	59.22.5101	100 u	20% , 25V , EL	ANY
	C...211	59.05.2682	6.8 n	2.5%, 40V , PP	ANY
	C...212	59.22.5101	100 u	20% , 25V , EL	ANY
	C...213	59.22.5101	100 u	20% , 25V , EL	ANY
	C...214	59.05.2682	6.8 n	2.5%, 40V , PP	ANY
	C...215	59.22.3101	100 u	20% , 10V , EL	ANY
	C...216	59.06.0683	68 n	20% , 10V	ANY
	C...217	59.99.0401	47 u	10% , 16V , bipolar	ANY
	C...218	59.06.0683	68 n	20% , 20V	ANY
	C...219	59.06.0683	68 n	20% , 20V	ANY

IND.	POS.NO.	PART NO.	VALUE	SPECIFICATIONS / EQUIVALENT	MANUF.
	C...220	59.05.2102	1 n	2.5%, 25V , PP	ANY
	C...221	59.06.0683	68 n	20% , 20V	ANY
	C...222	59.22.5101	100 u	20% , 25V , EL	ANY
	C...223	59.06.0683	68 n	20% , 20V	ANY
	C...224	59.05.2471	470 p	2.5%, 25V , PP	ANY
	C...225	59.06.0683	68 n	20% , 10V	ANY
	C...226	59.34.2220	22 p	5% , 25V , CER	ANY
	C...227	59.34.2220	22 p	5% , 25V , CER	ANY
	C...228	59.05.2103	10 n	2.5%, 25V , PP	ANY
	C...229	59.05.2471	470 p	2.5%, 25V , PP	ANY
	C...230	59.05.2103	10 n	2.5%, 25V , PP	ANY
	C...231	59.06.0683	68 n	20% , 20V	ANY
(05)	C...232	59.06.0104	100 n	20% , 20V	ANY
(05)	C...233	59.22.3470	47 u	10% , 10V	ANY
	D.....1	50.04.0105		1N 4004	ANY
	D.....2	50.04.0105		1N 4004	ANY
	D.....3	50.04.0105		1N 4004	ANY
(00)	D.....4	50.04.1106		Z-DIODE 2V7	ANY
(03)	D.....4			not used	
(00)	D.....5	50.04.1106		Z-DIODE 2V7	ANY
(03)	D.....5			not used	
(00)	D.....6	50.04.1106		Z-DIODE 2V7	ANY
(03)	D.....6			not used	
(00)	D.....7	50.04.1106		Z-DIODE 2V7	ANY
(03)	D.....7			not used	
	D.....8	50.04.0105		1N 4004	ANY
	D.....9	50.04.0105		1N 4004	ANY
	D....10	50.04.0125		1N 4448	ANY
	D....11	50.04.0125		1N 4448	ANY
	D....12	50.04.0125		1N 4448	ANY
	D....13	50.04.0125		1N 4448	ANY
	D....14	50.04.0125		1N 4448	ANY
	D....15	50.04.0125		1N 4448	ANY
	D....16	50.04.0125		1N 4448	ANY
	D....17	50.04.0125		1N 4448	ANY
	D....18	50.04.0125		1N 4448	ANY

IND.	POS.NO.	PART NO.	VALUE	SPECIFICATIONS / EQUIVALENT	MANUF.
	F.....1	51.01.0118		T1.25A/250V	ANY
	F.....2	51.01.0120		T2.0 A/250V	ANY
	F.....3	51.01.0118		T1.25A/250V	ANY
	IC....1	50.15.0114		UA 9637	ANY
	IC....2	50.07.0037		AD 7528 IN	ANY
	IC....3	50.50.0010		PORTMASTER	St
	IC....4	50.50.0010		PORTMASTER	St
	IC....5	50.18.0100		16 V 8 - 25 (SW 1.862.987.20)	ANY
	IC....6	50.09.0106		NE 5532 AN	ANY
	IC....7	50.17.1594		74 HC 594	ANY
	IC....8	50.09.0106		NE 5532 AN	ANY
	IC....9	50.10.0104		LM 317 SP	ANY
	IC...10	50.09.0106		NE 5532 AN	ANY
	IC...11	50.17.0574		74 HCT 574	ANY
	IC...12	50.14.0114		TBP 28L 22N (SW 1.862.992.20)	ANY
	IC...13	50.14.0114		TBP 28L 22N (SW 1.862.993.20)	ANY
	IC...14	50.11.0134		NE 570 N	ANY
(00)	IC...15	50.09.0106		NE 5532 AN	ANY
(03)	IC...15	50.09.0121		TL 072 BCP	ANY
(04)	IC...15			siehe Assembly A15	
	IC...16	50.17.1594		74 HC 594	ANY
	IC...17	50.17.1594		74 HC 594	ANY
	IC...18	50.10.0104		LM 317 SP	ANY
	IC...19	50.09.0104		LF 347 N	ANY
	IC...20	50.10.0105		LM 337 SP	ANY
	IC...21	50.17.1597		74 HC 597	ANY
	IC...22	50.17.1597		74 HC 597	ANY
	IC...23	50.18.0100		16 V 8 - 25 (SW 1.862.985.20)	ANY
	IC...24	50.14.0114		TBP 28L 22N (SW 1.862.994.20)	ANY
	IC...25	50.17.0574		74 HCT 574	ANY
	IC...26	50.09.0101		TL 072 CP	ANY
	IC...27	50.09.0106		NE 5532 AN	ANY
	IC...28	50.17.0101		HI1-201 HS-5	ANY
	IC...29	50.17.1574		74 HC 574	ANY
	IC...30	50.17.1574		74 HC 574	ANY
	IC...31	50.17.1684		74 HC 684	ANY

IND.	POS.NO.	PART NO.	VALUE	SPECIFICATIONS / EQUIVALENT	MANUF.
(00)	IC...32	50.18.0100		16 V 8 - 25 (SW 1.862.986.20)	ANY
(03)	IC...32	50.18.0100		16 V 8 - 25 (SW 1.862.991.20)	ANY
	IC...33	50.17.1684		74 HC 684	ANY
	IC...34	50.15.0108		AM 26 LS 31	ANY
(00)	IC...35	50.18.0100		16 V 8 - 25 (SW 1.862.991.20)	ANY
(03)	IC...35	50.18.0100		16 V 8 - 25 (SW 1.862.986.20)	ANY
	IC...36	50.17.1123		74 HC 123	ANY
	IC...37	50.19.0109		AD 7820	ANY
	IC...38	50.19.0109		AD 7820	ANY
	IC...39	50.07.0037		AD 7528 IN	ANY
	IC...40	50.17.0574		74 HCT 574	ANY
	IC...41	50.14.1004		HM 62256 LP -12	ANY
	IC...42	50.14.1004		HM 62256 LP -12	ANY
	IC...43	50.18.0100		16 V 8 - 25 (SW 1.862.990.20)	ANY
	IC...44	50.18.0100		16 V 8 - 25 (SW 1.862.988.20)	ANY
	IC...45	50.07.0037		AD 7528 IN	ANY
	IC...46	50.17.0574		74 HCT 574	ANY
	IC...47	50.09.0104		LF 347 N	ANY
	IC...48	50.17.0101		HI1-201 HS-5	ANY
	IC...49	50.18.0100		16 V 8 - 25 (SW 1.862.989.20)	ANY
	IC...50	50.18.0100		16 V 8 - 25 (SW 1.862.988.20)	ANY
(00)	IC...51	50.09.0106		NE 5532 AN	ANY
(03)	IC...51	50.09.0121		TL 072 BCP	ANY
(04)	IC...51			siehe Assembly A51	
	IC...52	50.09.0104		LF 347 N	ANY
	IC...53	50.17.1574		74 HC 574	ANY
	IC...54	50.17.1574		74 HC 574	ANY
	IC...55	50.09.0109		HA7-2525-5	ANY
	IC...56	50.07.0034		DG 201 ACJ	ANY
	IC...57	50.11.0134		NE 570 N	ANY
	IC...58	50.09.0106		NE 5532 AN	ANY
	IC...59	50.09.0106		NE 5532 AN	ANY
	IC...60	50.09.0106		NE 5532 AN	ANY
	IC...61	50.09.0106		NE 5532 AN	ANY
	IC...62	50.11.0114		LM 311 N	ANY
	IC...63	50.05.0283		LM 393	ANY
	IC...64	50.17.1594		74 HC 594	ANY

IND.	POS.NO.	PART NO.	VALUE	SPECIFICATIONS / EQUIVALENT	MANUF.
	IC...65	50.07.0037		AD 7528 IN	ANY
	IC...66	50.09.0106		NE 5532 AN	ANY
	IC...67	50.11.0114		LM 311 N	ANY
	IC...68	50.09.0106		NE 5532 AN	ANY
	IC...69	50.09.0104		LF 347 N	ANY
	K.....1	56.04.0170	5 V	100V/0.5A, AG/AU	ANY
	K.....2	56.04.0170	5 V	100V/0.5A, AG/AU	ANY
	L.....1	62.03.0010	48 uH	2 A, Filter	St
	L.....2	62.03.0030	110 uH	3 A, Filter	St
	L.....3	62.03.0010	48 uH	2 A, Filter	St
	MP....1	1.862.661.11		CUE-PCB	St
	MP....2	50.20.3004		HEATSINK TO 220	ANY
	MP....3	50.20.3004		HEATSINK TO 220	ANY
	MP....4	50.20.3004		HEATSINK TO 220	ANY
	MP....5	1.010.116.51		TEXT-ETIK. 5*20 (T1.25A)	St
	MP....6	1.010.116.51		TEXT-ETIK. 5*20 (T1.25A)	St
	MP....7	1.010.118.51		TEXT-ETIK. 5*20 (T2.00A)	St
	MP....8	1.101.001.20		TEXT-ETIK. 5*20 HARDWARE -20	St
	MP....9	43.01.0108		ESE-WARNSCHILD	ANY
	MP...10	1.022.400.03		ISOLATION	ANY
	MP...11	1.022.400.03		ISOLATION	ANY
	MP...12	28.99.0119		RIVETING NUT D 2.5*0.15* 10	ANY
	MP...13	28.99.0119		RIVETING NUT D 2.5*0.15* 10	ANY
	MP...14	28.99.0119		RIVETING NUT D 2.5*0.15* 10	ANY
	MP...15	28.99.0119		RIVETING NUT D 2.5*0.15* 10	ANY
	MP...16	1.862.661.01		LABEL 5 * 20	ANY
	MP...17	50.20.2001	P	2 * TO 92	ANY
	MP...18	50.20.2001	P	2 * TO 92	ANY
	MP...19	50.20.2001	P	2 * TO 92	ANY
	MP...20	50.20.2001	P	2 * TO 92	ANY
	MP...21	50.20.2001	P	2 * TO 92	ANY
	MP...22	50.20.2001	P	2 * TO 92	ANY
	MP...23	50.20.2001	P	2 * TO 92	ANY
	MP...24	50.20.2001	P	2 * TO 92	ANY

IND.	POS.NO.	PART NO.	VALUE	SPECIFICATIONS / EQUIVALENT	MANUF.
(01)	MP...26	55.03.0350		TRANSISTORSOCKEL	ANY
(01)	MP...27	55.03.0350		TRANSISTORSOCKEL	ANY
(01)	MP...28	1.862.661.03		LABEL	ST
(01)	MP...29	1.862.650.05		AUSWERFERHEBEL	ANY
(01)	MP...30	1.862.650.05		AUSWERFERHEBEL	ANY
(01)	MP...31	1.862.650.06		AUSWERFERSTIFT	ANY
(01)	MP...32	1.862.650.06		AUSWERFERSTIFT	ANY
	P.....1	54.01.0358		3 * 32 Euro Print	ANY
	P.....2	54.01.0358		3 * 32 Euro Print	ANY
	Q.....1	50.03.0340		BC 337-25	ANY
	Q.....2	50.03.0340		BC 337-25	ANY
	Q.....3	50.03.0625		BC 327 matched	ANY
	Q.....4	50.03.0625		BC 327 matched	ANY
	Q.....5	50.03.0625		BC 327 matched	ANY
	Q.....6	50.03.0625		BC 327 matched	ANY
	Q.....7	50.03.0625		BC 327 matched	ANY
	Q.....8	50.03.0625		BC 327 matched	ANY
	Q.....9	50.03.0625		BC 327 matched	ANY
	Q....10	50.03.0625		BC 327 matched	ANY
	Q....11	50.03.0516		BC 337 matched	ANY
	Q....12	50.03.0516		BC 337 matched	ANY
	Q....13	50.03.0516		BC 337 matched	ANY
	Q....14	50.03.0516		BC 337 matched	ANY
	Q....15	50.03.0516		BC 337 matched	ANY
	Q....16	50.03.0516		BC 337 matched	ANY
	Q....17	50.03.0516		BC 337 matched	ANY
	Q....18	50.03.0516		BC 337 matched	ANY
	Q....19	50.11.0106		SD 214-DE	ANY
	Q....20	50.11.0106		SD 214-DE	ANY
	R.....1	57.11.3271	270 E	1%	ANY
	R.....2	57.11.3392	3.9 k	1%	ANY
	R.....3	57.11.3102	1 k	1%	ANY
	R.....4	57.11.3223	22 k	1%	ANY
	R.....5	57.11.3822	8.2 k	1%	ANY

IND.	POS.NO.	PART NO.	VALUE	SPECIFICATIONS / EQUIVALENT	MANUF.
(00)	R.....6	57.11.3103	10 k	1%	ANY
(05)	R.....6	57.11.3153	15 k	1%	ANY
	R.....7	57.11.3821	820 E	1%	ANY
	R.....8	57.11.3103	10 k	1%	ANY
	R.....9	57.11.3103	10 k	1%	ANY
(00)	R....10	57.11.3562	5.6 k	1%	ANY
(03)	R....10	57.11.3332	3.3 k	1%	ANY
	R....11	57.11.3332	3.3 k	1%	ANY
	R....12	57.11.3222	2.2 k	1%	ANY
(00)	R....13	58.01.8103	10 k	10% , Pot.-meter	ANY
(02)	R....13	58.05.1103	10 k	10% , Pot.-meter	ANY
(03)	R....13	58.05.1203	20 k	10% , Pot.-meter	ANY
(00)	R....14	57.11.3392	3.9 k	1%	ANY
(05)	R....14	57.11.3472	4.7 k	1%	ANY
	R....15	57.11.3332	3.3 k	1%	ANY
	R....16	57.11.3222	2.2 k	1%	ANY
	R....17	57.11.3332	3.3 k	1%	ANY
(00)	R....18	58.01.8103	10 k	10% , Pot.-meter	ANY
(02)	R....18	58.05.1103	10 k	10% , Pot.-meter	ANY
(03)	R....18	58.05.1203	20 k	10% , Pot.-meter	ANY
	R....19	57.11.3222	2.2 k	1%	ANY
	R....20	57.11.3821	820 E	1%	ANY
(00)	R....21	57.11.3562	5.6 k	1%	ANY
(03)	R....21	57.11.3332	3.3 k	1%	ANY
	R....22	57.11.3822	8.2 k	1%	ANY
	R....23	57.11.3223	22 k	1%	ANY
	R....24	57.11.3332	3.3 k	1%	ANY
	R....25	57.11.3103	10 k	1%	ANY
	R....26	57.11.3222	2.2 k	1%	ANY
	R....27	57.11.3102	1 k	1%	ANY
	R....28	57.11.3392	3.9 k	1%	ANY
	R....29	57.11.3271	270 E	1%	ANY
	R....30	57.11.3272	2.7 k	1%	ANY
	R....31	57.11.3241	240 E	1%	ANY
	R....32	57.11.3332	3.3 k	1%	ANY
	R....33	57.56.5470	47 E	10% , 2W	ANY
	R....34	57.11.3103	10 k	1%	ANY

CUE MODULATOR 1.862.661.20

IND.	POS.NO.	PART NO.	VALUE	SPECIFICATIONS / EQUIVALENT	MANUF.
	R...35	57.11.3103	10 k	1%	ANY
	R...36	57.11.3103	10 k	1%	ANY
	R...37	57.11.3223	22 k	1%	ANY
	R...38	57.11.3103	10 k	1%	ANY
	R...39	57.11.3103	10 k	1%	ANY
	R...40	57.11.3103	10 k	1%	ANY
	R...41	57.11.3103	10 k	1%	ANY
	R...42	57.11.3103	10 k	1%	ANY
	R...43	57.11.3103	10 k	1%	ANY
	R...44	57.11.3101	100 E	1%	ANY
	R...45	57.11.3221	220 E	1%	ANY
	R...46	57.11.3103	10 k	1%	ANY
	R...47	57.11.3332	3.3 k	1%	ANY
	R...48	57.11.3153	15 k	1%	ANY
	R...49	57.11.3223	22 k	1%	ANY
	R...50	57.11.3103	10 k	1%	ANY
	R...51	57.11.3392	3.9 k	1%	ANY
	R...52	57.11.3102	1 k	1%	ANY
	R...53	57.11.3682	6.8 k	1%	ANY
	R...54	57.11.3224	220 k	1%	ANY
	R...55	57.11.3153	15 k	1%	ANY
	R...56	57.11.3103	10 k	1%	ANY
	R...57	57.11.3682	6.8 k	1%	ANY
	R...58	57.11.3392	3.9 k	1%	ANY
	R...59	57.11.3224	220 k	1%	ANY
	R...60	57.11.3392	3.9 k	1%	ANY
	R...61	57.11.3682	6.8 k	1%	ANY
	R...62	57.11.3103	10 k	1%	ANY
	R...63	57.11.3102	1 k	1%	ANY
	R...64	57.11.3392	3.9 k	1%	ANY
	R...65	57.11.3153	15 k	1%	ANY
	R...66	57.11.3103	10 k	1%	ANY
	R...67	57.11.3682	6.8 k	1%	ANY
(00)	R...68	58.01.8104	100 k	10% , Pot.-meter	ANY
(02)	R...68	58.05.1104	100 k	10% , Pot.-meter	ANY
	R...69	57.11.3153	15 k	1%	ANY
	R...70	57.11.3182	1.8 k	1%	ANY

S T U D E R (05) 90/04/06 RU CUE BOARD PL 1.862.661.20 PAGE 13

IND.	POS.NO.	PART NO.	VALUE	SPECIFICATIONS / EQUIVALENT	MANUF.
	R...71	58.01.8104	100 k	10% , Pot.-meter	ANY
(02)	R...71	58.05.1104	100 k	10% , Pot.-meter	ANY
	R...72	57.11.3103	10 k	1%	ANY
	R...73	57.11.3103	10 k	1%	ANY
	R...74	57.11.3222	2.2 k	1%	ANY
	R...75	57.11.3182	1.8 k	1%	ANY
	R...76	57.11.3562	5.6 k	1%	ANY
	R...77	57.11.3562	5.6 k	1%	ANY
	R...78	57.11.3334	330 k	1%	ANY
	R...79	57.11.3334	330 k	1%	ANY
	R...80	57.11.3103	10 k	1%	ANY
	R...81	57.11.3241	240 E	1%	ANY
	R...82	57.11.3222	2.2 k	1%	ANY
	R...83	57.11.3222	2.2 k	1%	ANY
(00)	R...84	58.01.8104	100 k	10% , Pot.-meter	ANY
(02)	R...84	58.05.1104	100 k	10% , Pot.-meter	ANY
	R...85	57.11.3562	5.6 k	1%	ANY
	R...86	57.11.3562	5.6 k	1%	ANY
	R...87	57.11.3222	2.2 k	1%	ANY
	R...88	57.11.3272	2.7 k	1%	ANY
	R...89	57.11.3332	3.3 k	1%	ANY
	R...90	57.11.3102	1 k	1%	ANY
	R...91	57.11.3102	1 k	1%	ANY
	R...92	57.11.3222	2.2 k	1%	ANY
	R...93	57.11.3102	1 k	1%	ANY
	R...94	57.11.3103	10 k	1%	ANY
	R...95	57.11.3332	3.3 k	1%	ANY
	R...96	57.11.3102	1 k	1%	ANY
	R...97	57.11.3102	1 k	1%	ANY
	R...98	57.11.3102	1 k	1%	ANY
	R...99	57.11.3332	3.3 k	1%	ANY
	R...100	57.11.3102	1 k	1%	ANY
	R...101	57.11.3332	3.3 k	1%	ANY
(00)	R...102	58.01.8103	10 k	10% , Pot.-meter	ANY
(02)	R...102	58.05.1103	10 k	10% , Pot.-meter	ANY
	R...103	57.11.3103	10 k	1%	ANY
	R...104	57.11.3103	10 k	1%	ANY

S T U D E R (05) 90/04/06 RU CUE BOARD PL 1.862.661.20 PAGE 14

IND.	POS.NO.	PART NO.	VALUE	SPECIFICATIONS / EQUIVALENT	MANUF.
	R...105	58.01.8103	10 k	10% , Pot.-meter	ANY
(02)	R...105	58.05.1103	10 k	10% , Pot.-meter	ANY
	R...106	57.11.3332	3.3 k	1%	ANY
	R...107	57.11.3332	3.3 k	1%	ANY
(00)	R...108	58.01.8103	10 k	10% , Pot.-meter	ANY
(02)	R...108	58.05.1103	10 k	10% , Pot.-meter	ANY
	R...109	57.11.3120	12 E	1%	ANY
	R...110	57.11.3100	10 E	1%	ANY
	R...111	57.11.3100	10 E	1%	ANY
	R...112	57.11.3100	10 E	1%	ANY
	R...113	57.11.3120	12 E	1%	ANY
	R...114	57.11.3100	10 E	1%	ANY
	R...115	57.11.3120	12 E	1%	ANY
	R...116	57.11.3100	10 E	1%	ANY
	R...117	57.11.3100	10 E	1%	ANY
	R...118	57.11.3100	10 E	1%	ANY
	R...119	57.11.3120	12 E	1%	ANY
	R...120	57.11.3100	10 E	1%	ANY
(00)	R...121	58.01.8103	10 k	10% , Pot.-meter	ANY
(02)	R...121	58.05.1103	10 k	10% , Pot.-meter	ANY
	R...122	57.11.3472	4.7 k	1%	ANY
	R...123	57.11.3472	4.7 k	1%	ANY
	R...124	57.11.3120	12 E	1%	ANY
	R...125	57.11.3272	2.7 k	1%	ANY
(00)	R...126	58.01.8503	50 k	10% , Pot.-meter	ANY
(02)	R...126	58.05.1503	50 k	10% , Pot.-meter	ANY
	R...127	57.11.3103	10 k	1%	ANY
	R...128	57.11.3103	10 k	1%	ANY
	R...129	57.11.3103	10 k	1%	ANY
	R...130	57.11.3103	10 k	1%	ANY
	R...131	57.11.3152	1.5 k	1%	ANY
	R...132	57.11.3152	1.5 k	1%	ANY
	R...133	57.11.3472	4.7 k	1%	ANY
	R...134	57.11.3152	1.5 k	1%	ANY
	R...135	57.11.3152	1.5 k	1%	ANY
	R...136	57.11.3472	4.7 k	1%	ANY
	R...137	57.11.3103	10 k	1%	ANY

S T U D E R (05) 90/04/06 RU CUE BOARD PL 1.862.661.20 PAGE 15

IND.	POS.NO.	PART NO.	VALUE	SPECIFICATIONS / EQUIVALENT	MANUF.
	R...138	57.11.3103	10 k	1%	ANY
	R...139	57.11.3103	10 k	1%	ANY
	R...140	57.11.3103	10 k	1%	ANY
	R...141	57.11.3102	1 k	1%	ANY
	R...142	57.11.3103	10 k	1%	ANY
	R...143	57.11.3562	5.6 k	1%	ANY
	R...144	57.11.3562	5.6 k	1%	ANY
(00)	R...145	57.11.3332	3.3 k	1%	ANY
(03)	R...145	57.11.3821	820 E	1%	ANY
	R...146	57.11.3222	2.2 k	1%	ANY
	R...147	57.11.3222	2.2 k	1%	ANY
	R...148	57.11.3103	10 k	1%	ANY
	R...149	57.11.3103	10 k	1%	ANY
	R...150	57.11.3472	4.7 k	1%	ANY
	R...151	57.11.3472	4.7 k	1%	ANY
	R...152	57.11.3121	120 E	1%	ANY
	R...153	57.11.3131	130 E	1%	ANY
	R...154	57.11.3103	10 k	1%	ANY
	R...155	57.11.3103	10 k	1%	ANY
	R...156	57.11.3472	4.7 k	1%	ANY
	R...157	57.11.3472	4.7 k	1%	ANY
	R...158	57.11.3103	10 k	1%	ANY
	R...159	57.11.3103	10 k	1%	ANY
	R...160	57.11.3472	4.7 k	1%	ANY
	R...161	57.11.3472	4.7 k	1%	ANY
	R...162	57.11.3121	120 E	1%	ANY
	R...163	57.11.3131	130 E	1%	ANY
	R...164	57.11.3103	10 k	1%	ANY
	R...165	57.11.3103	10 k	1%	ANY
	R...166	57.11.3472	4.7 k	1%	ANY
	R...167	57.11.3472	4.7 k	1%	ANY
	R...168	57.11.3102	1 k	1%	ANY
	R...169	57.11.3562	5.6 k	1%	ANY
	R...170	57.11.3222	2.2 k	1%	ANY
	R...171	57.11.3222	2.2 k	1%	ANY
	R...172	57.11.3562	5.6 k	1%	ANY
	R...173	57.11.3822	8.2 k	1%	ANY

S T U D E R (05) 90/04/06 RU CUE BOARD PL 1.862.661.20 PAGE 16

IND.	POS.NO.	PART NO.	VALUE	SPECIFICATIONS / EQUIVALENT	MANUF.
	R...174	57.11.3224	220 k	1%	ANY
(00)	R...175	57.11.3332	3.3 k	1%	ANY
(03)	R...175	57.11.3821	820 E	1%	ANY
	R...176	58.05.1104	100 k	10% , Pot.-meter	ANY
	R...177	57.11.3104	100 k	1%	ANY
	R...178	57.11.3472	4.7 k	1%	ANY
	R...179	57.11.3224	220 k	1%	ANY
	R...180	57.11.3104	100 k	1%	ANY
	R...181	57.11.3392	3.9 k	1%	ANY
	R...182	57.11.3104	100 k	1%	ANY
	R...183	57.11.3104	100 k	1%	ANY
	R...184	58.05.1104	100 k	10% , Pot.-meter	ANY
	R...185	57.11.5225	2.2 M	1%	ANY
	R...186	57.11.5225	2.2 M	1%	ANY
	R...187	57.11.3682	6.8 k	1%	ANY
	R...188	57.11.3682	6.8 k	1%	ANY
	R...189	57.11.3822	8.2 k	1%	ANY
	R...190	57.11.3562	5.6 k	1%	ANY
	R...191	57.11.3392	3.9 k	1%	ANY
	R...192	57.11.3104	100 k	1%	ANY
	R...193	57.11.3222	2.2 k	1%	ANY
	R...194	57.11.3222	2.2 k	1%	ANY
	R...195	57.11.3562	5.6 k	1%	ANY
	R...196	57.11.3334	330 k	1%	ANY
	R...197	57.11.3103	10 k	1%	ANY
	R...198	57.11.3103	10 k	1%	ANY
	R...199	57.11.3103	10 k	1%	ANY
(00)	R...200	57.11.3103	10 k	1%	ANY
(03)	R...200	57.11.3562	5.6 k	1%	ANY
(00)	R...201	58.01.8503	50 k	10% , Pot.-meter	ANY
(02)	R...201	58.05.1503	50 k	10% , Pot.-meter	ANY
(00)	R...202	58.01.8503	50 k	10% , Pot.-meter	ANY
(02)	R...202	58.05.1503	50 k	10% , Pot.-meter	ANY
(00)	R...203	57.11.3103	10 k	1%	ANY
(03)	R...203	57.11.3562	5.6 k	1%	ANY
	R...204	57.11.3472	4.7 k	1%	ANY
	R...205	57.11.3153	15 k	1%	ANY

S T U D E R (05) 90/04/06 RU CUE BOARD PL 1.862.661.20 PAGE 17

IND.	POS.NO.	PART NO.	VALUE	SPECIFICATIONS / EQUIVALENT	MANUF.
	R...206	57.11.3104	100 k	1%	ANY
	R...207	57.11.3153	15 k	1%	ANY
	R...208	57.11.3334	330 k	1%	ANY
	R...209	57.11.3222	2.2 k	1%	ANY
(05)	R...210	57.11.3103	10 k	1%	ANY
	T.....1	1.022.454.00		INPUT - TRAFO 1:0.175	ST
	T.....2	1.022.454.00		INPUT - TRAFO 1:0.175	ST
	T.....3	1.022.275.00		TRIFILARTRAFO OUTPUT	ST
	T.....4	1.022.275.00		TRIFILARTRAFO OUTPUT	ST
	TP....1	54.02.0320		TESTPOINT *** QTY 45 **********	ANY
	XF....1	53.03.0118		FUSE HOLDER	ANY
	XF....2	53.03.0118		FUSE HOLDER	ANY
	XF....3	53.03.0118		FUSE HOLDER	ANY
	XIC...1	53.03.0166		DIL 8-PIN	ANY
	XIC...2	53.03.0165		DIL 20-PIN	ANY
	XIC...3	53.03.0173		DIL 28-PIN	ANY
	XIC...4	53.03.0173		DIL 28-PIN	ANY
	XIC...5	53.03.0165		DIL 20-PIN	ANY
	XIC...7	53.03.0168		DIL 16-PIN	ANY
	XIC..12	53.03.0165		DIL 20-PIN	ANY
	XIC..13	53.03.0165		DIL 20-PIN	ANY
	XIC..14	53.03.0168		DIL 16-PIN	ANY
(04)	XIC..15	53.03.0166		DIL 8-PIN	ANY
	XIC..16	53.03.0168		DIL 16-PIN	ANY
	XIC..17	53.03.0168		DIL 16-PIN	ANY
	XIC..21	53.03.0168		DIL 16-PIN	ANY
	XIC..22	53.03.0168		DIL 16-PIN	ANY
	XIC..23	53.03.0165		DIL 20-PIN	ANY
	XIC..24	53.03.0165		DIL 20-PIN	ANY
	XIC..28	53.03.0168		DIL 16-PIN	ANY
	XIC..32	53.03.0165		DIL 20-PIN	ANY
	XIC..34	53.03.0168		DIL 16-PIN	ANY
	XIC..35	53.03.0165		DIL 20-PIN	ANY

S T U D E R (05) 90/04/06 RU CUE BOARD PL 1.862.661.20 PAGE 18

IND.	POS.NO.	PART NO.	VALUE	SPECIFICATIONS / EQUIVALENT	MANUF.
	XIC..37	53.03.0165		DIL 20-PIN	ANY
	XIC..38	53.03.0165		DIL 20-PIN	ANY
	XIC..39	53.03.0165		DIL 20-PIN	ANY
	XIC..41	53.03.0173		DIL 28-PIN	ANY
	XIC..42	53.03.0173		DIL 28-PIN	ANY
	XIC..43	53.03.0165		DIL 20-PIN	ANY
	XIC..44	53.03.0165		DIL 20-PIN	ANY
	XIC..45	53.03.0165		DIL 20-PIN	ANY
	XIC..48	53.03.0168		DIL 16-PIN	ANY
	XIC..49	53.03.0165		DIL 20-PIN	ANY
	XIC..50	53.03.0165		DIL 20-PIN	ANY
(04)	XIC..51	53.03.0166		DIL 8-PIN	ANY
	XIC..56	53.03.0168		DIL 16-PIN	ANY
	XIC..57	53.03.0168		DIL 16-PIN	ANY
	XIC..64	53.03.0168		DIL 16-PIN	ANY
	XIC..65	53.03.0165		DIL 20-PIN	ANY

REMARKS: print-version of 18.4.89 (emphasis & de-emphasis and compressor & expander on the CUE-BOARD)

04: ASY 15/51 neu; XIC 15/51 neu
05: R6/R14; R210 neu; C232, C233 neu

MANUFACTURERS:

ORIG 06/06/89 (01) 89/09/04 (02) 89/09/27 (03) 89/10/18 (04) 90/01/22
(05) 90/04/06

S T U D E R (05) 90/04/06 RU CUE BOARD PL 1.862.661.20 PAGE 19

BLOCK DIAGRAM PING PONG

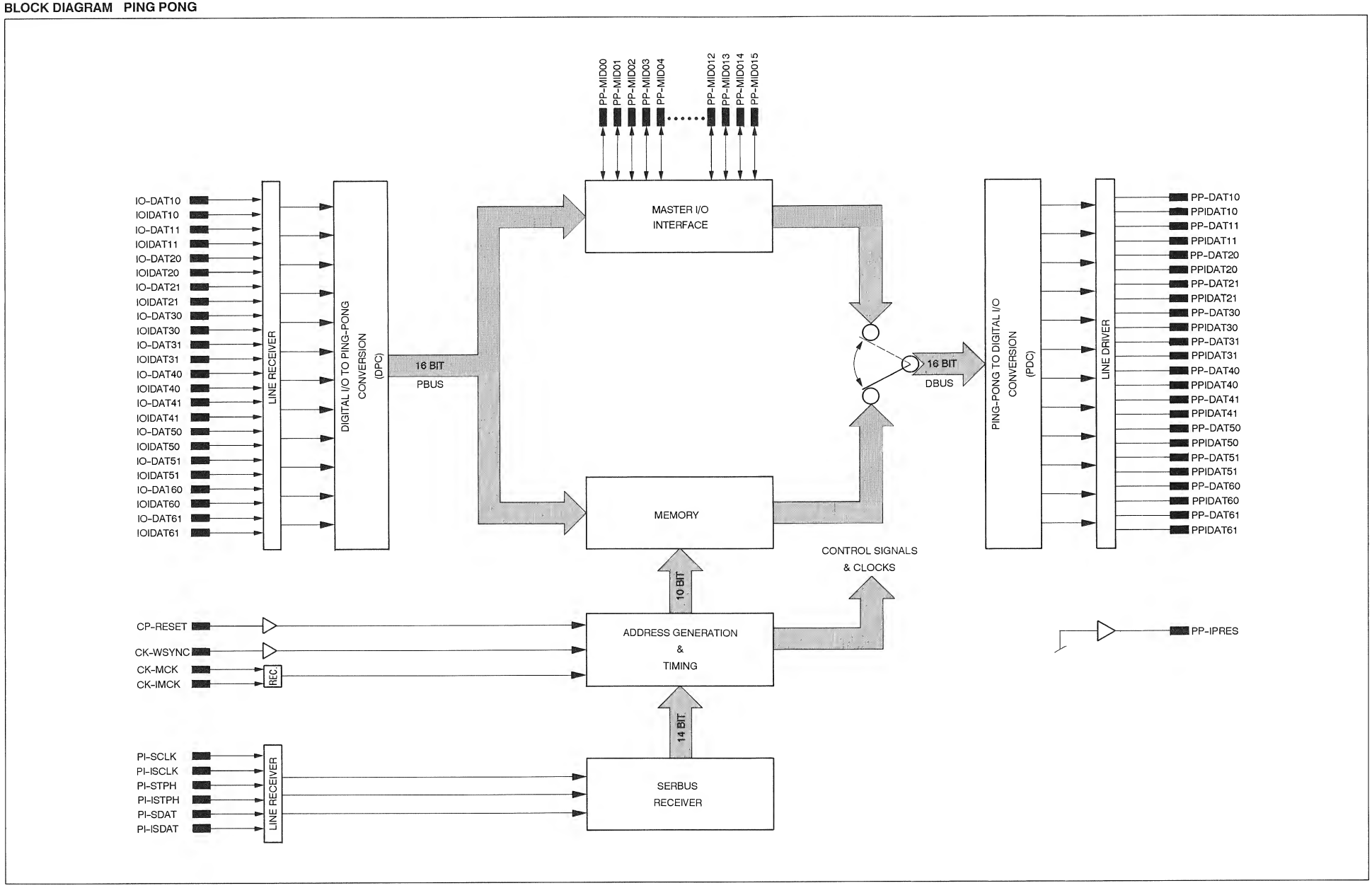

BLOCK DIAGRAM PING PONG

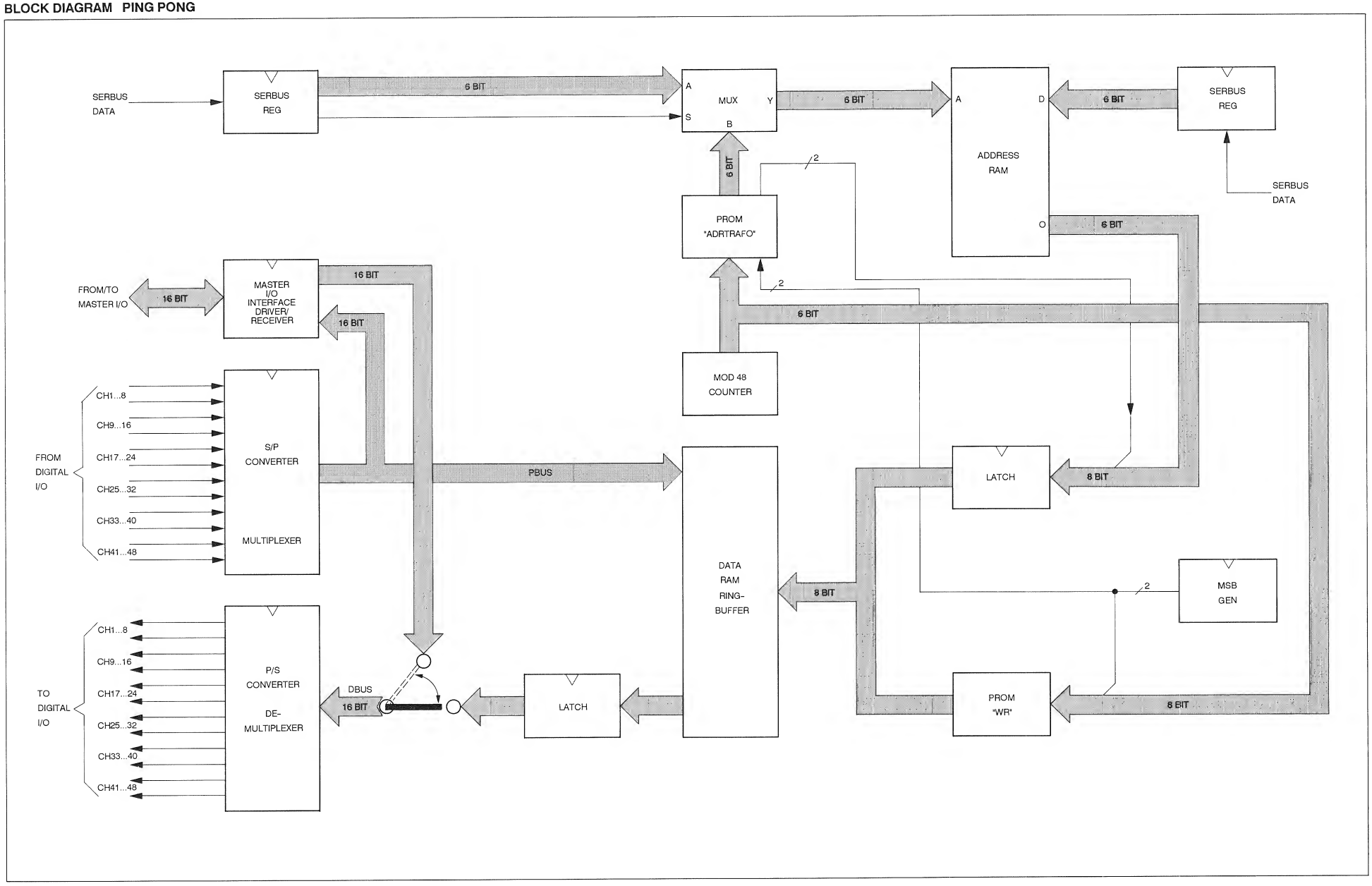

PING PONG 1.862.662.20

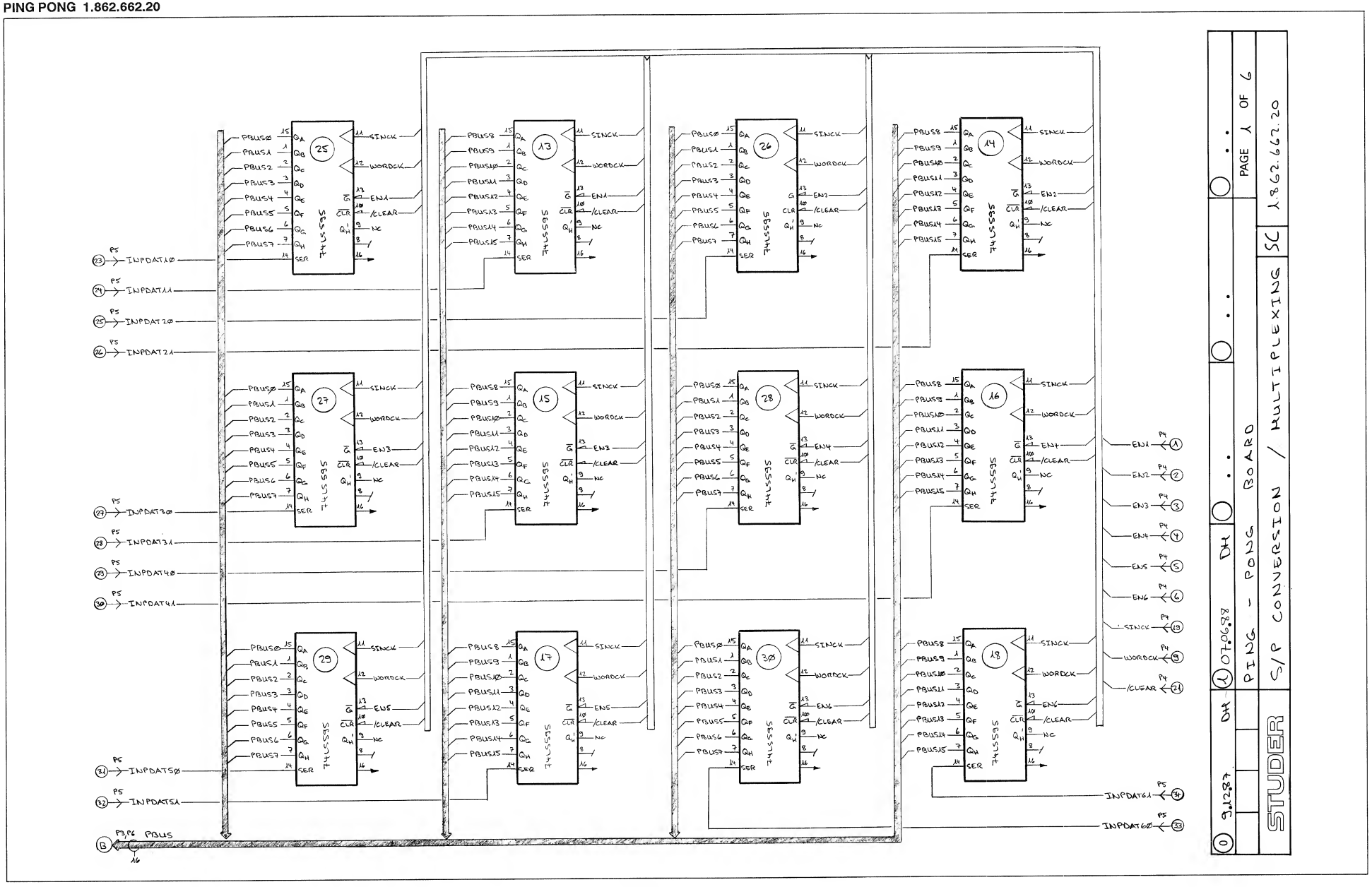

PING PONG 1.862.662.20

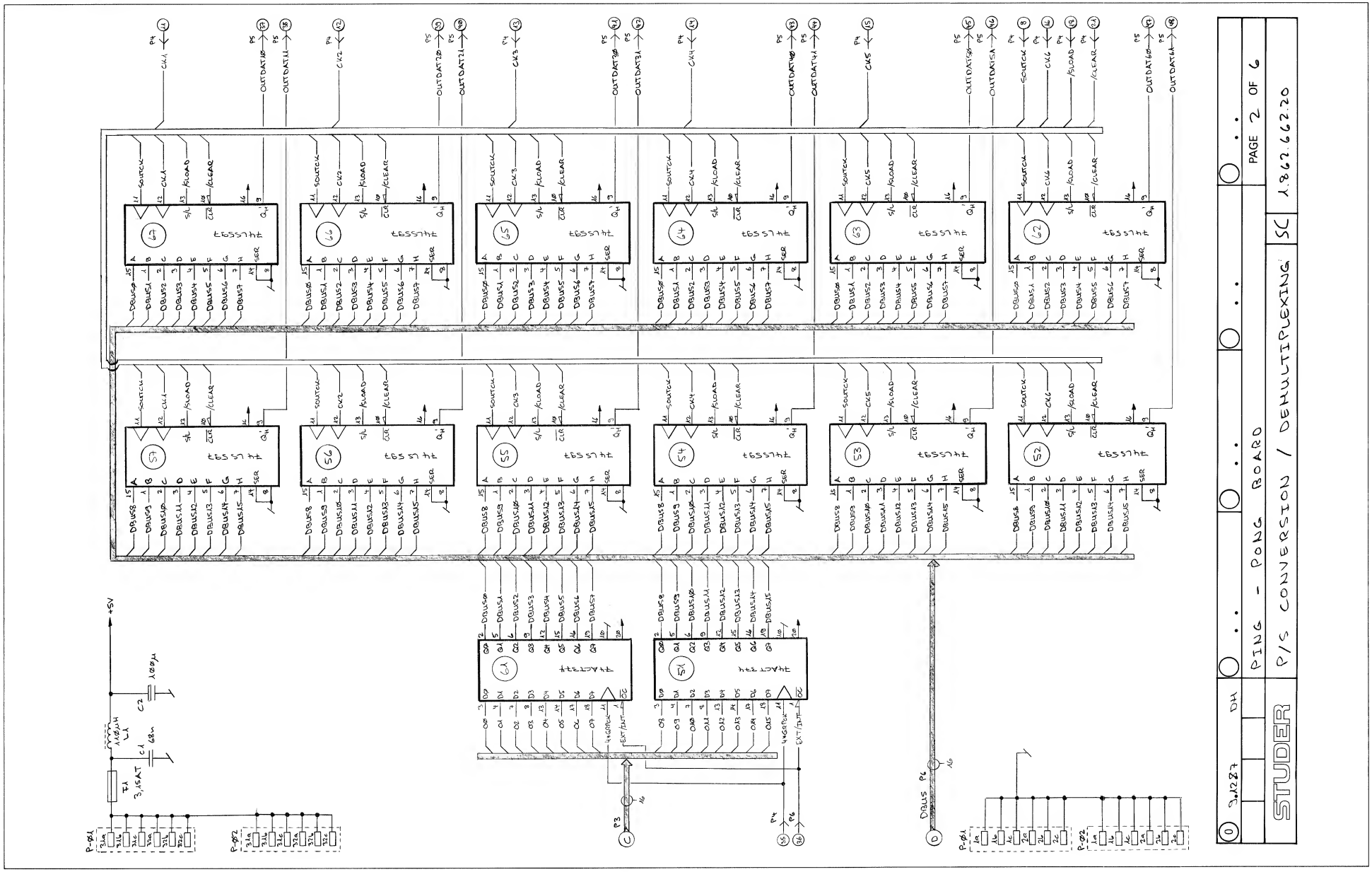

PING PONG 1.862.662.20

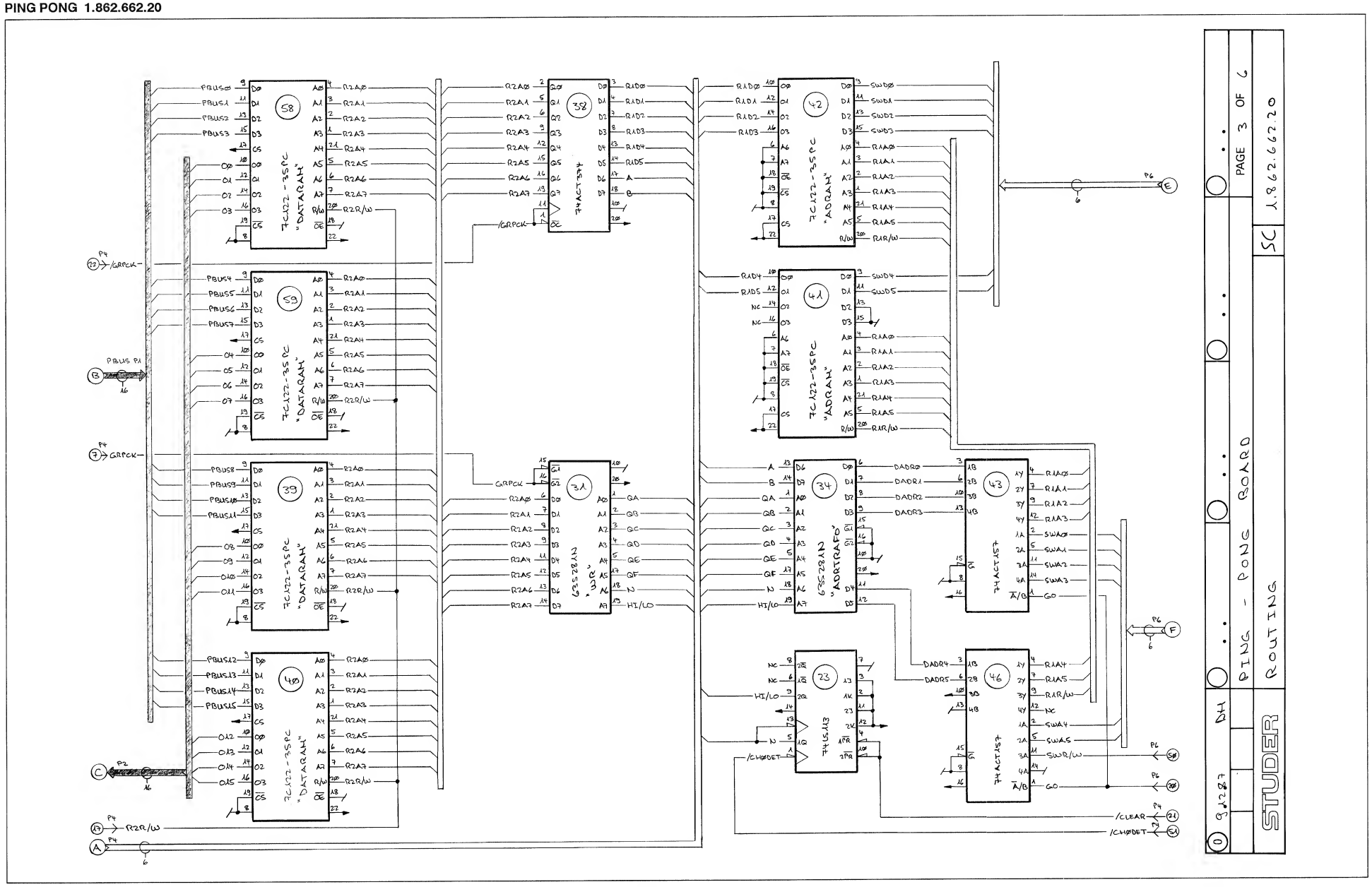

PING PONG 1.862.662.20

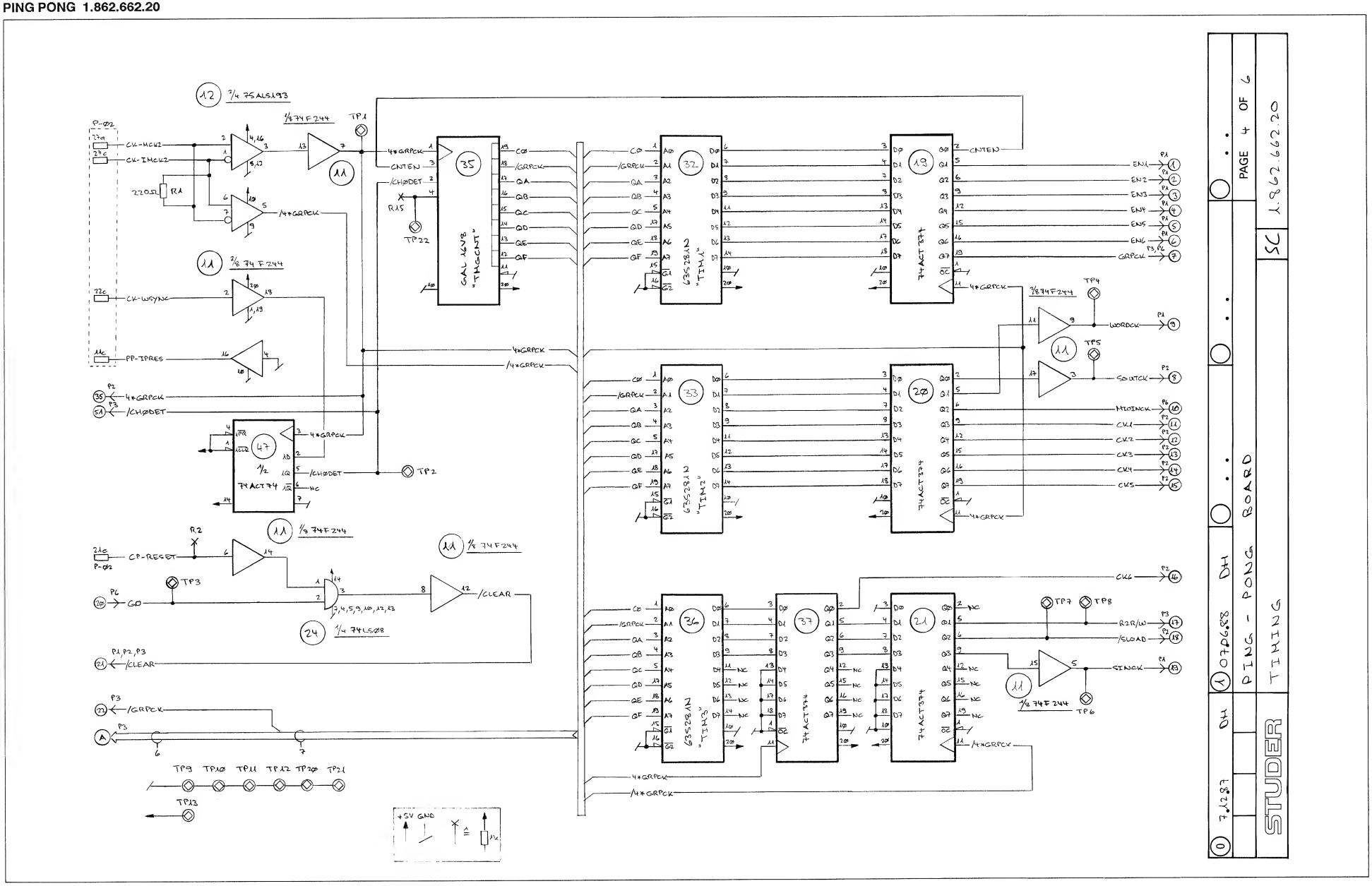

PING PONG 1.862.662.20

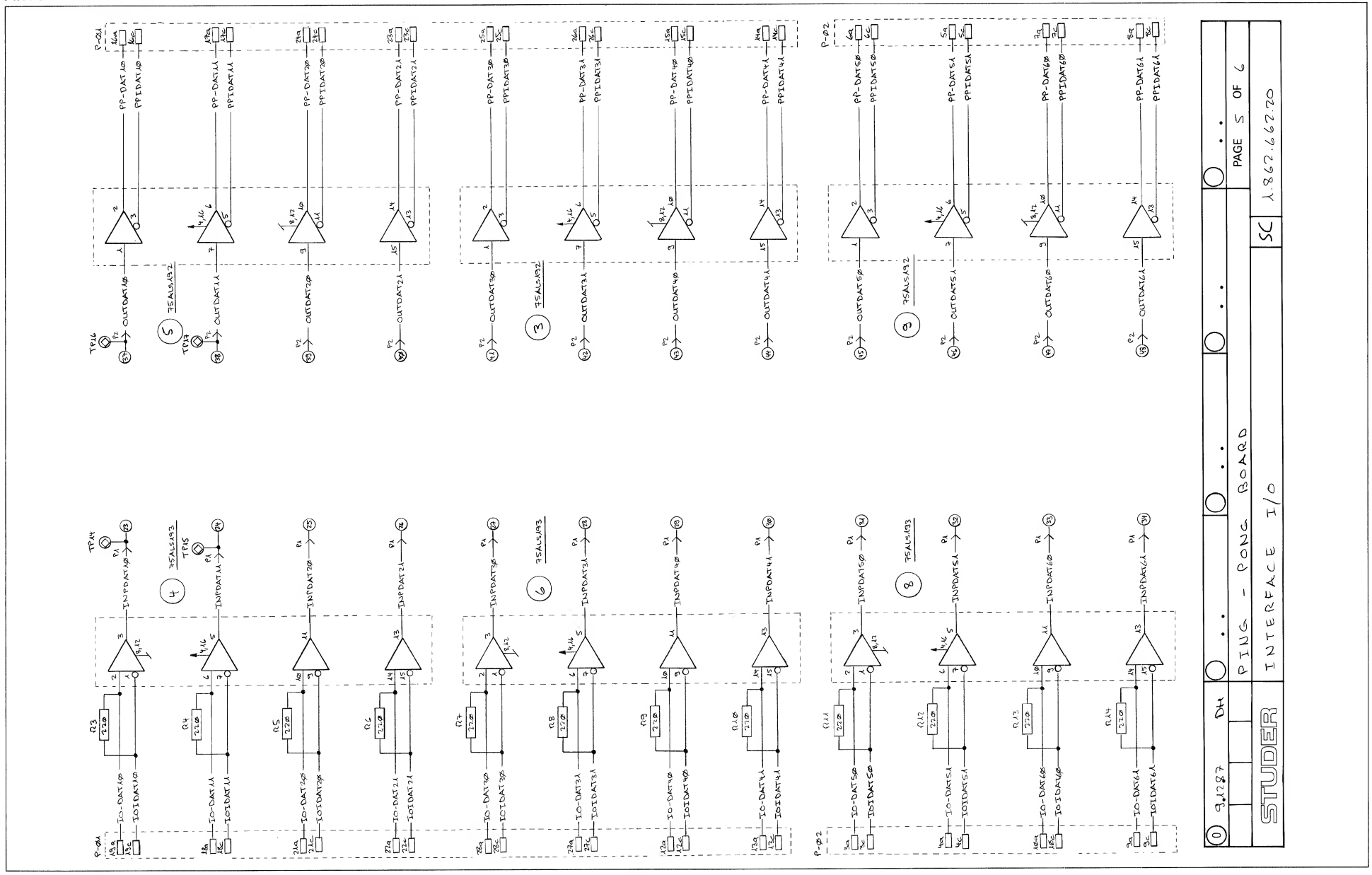

PING PONG 1.862.662.20

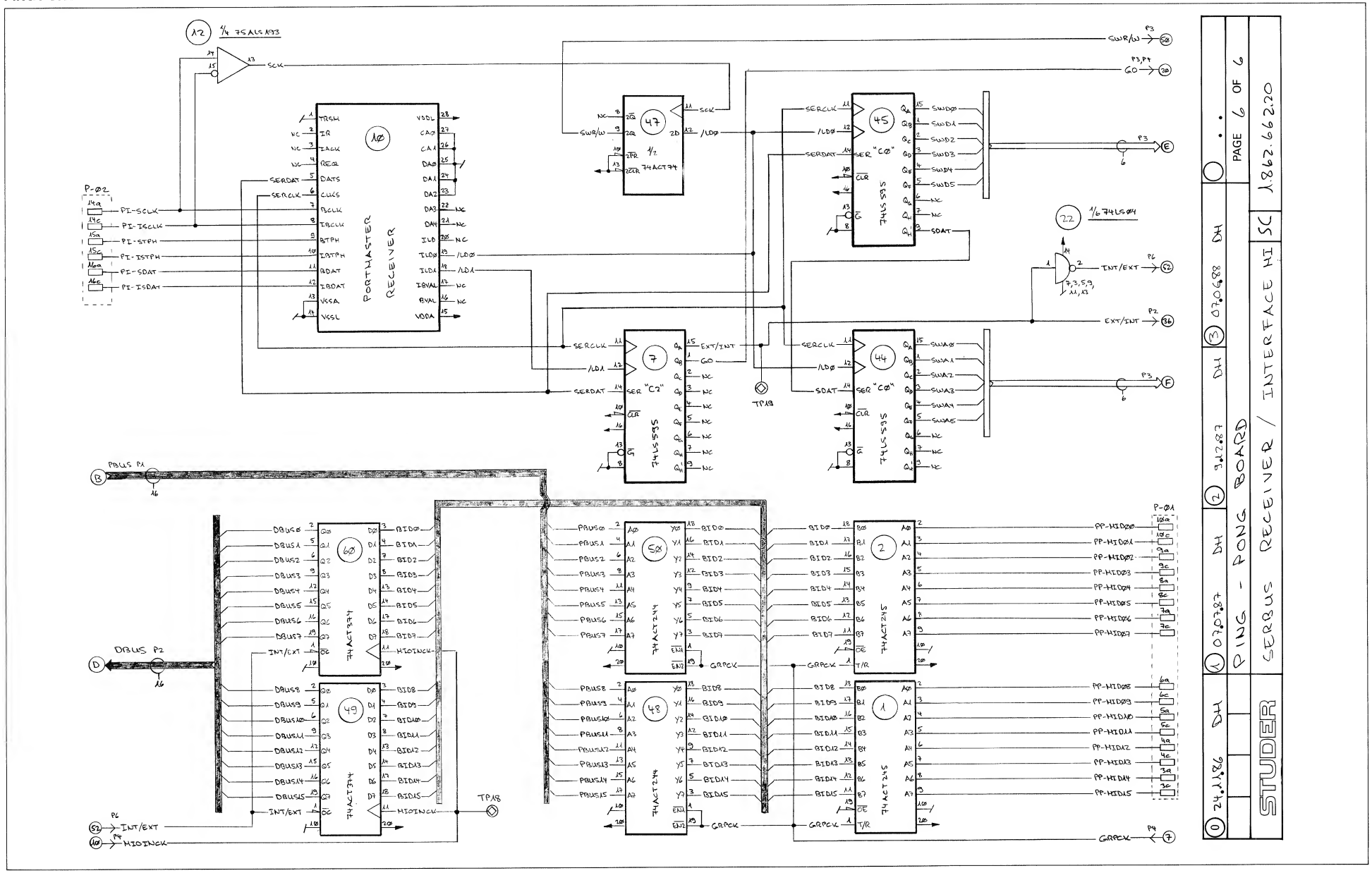

PING PONG 1.862.662.20

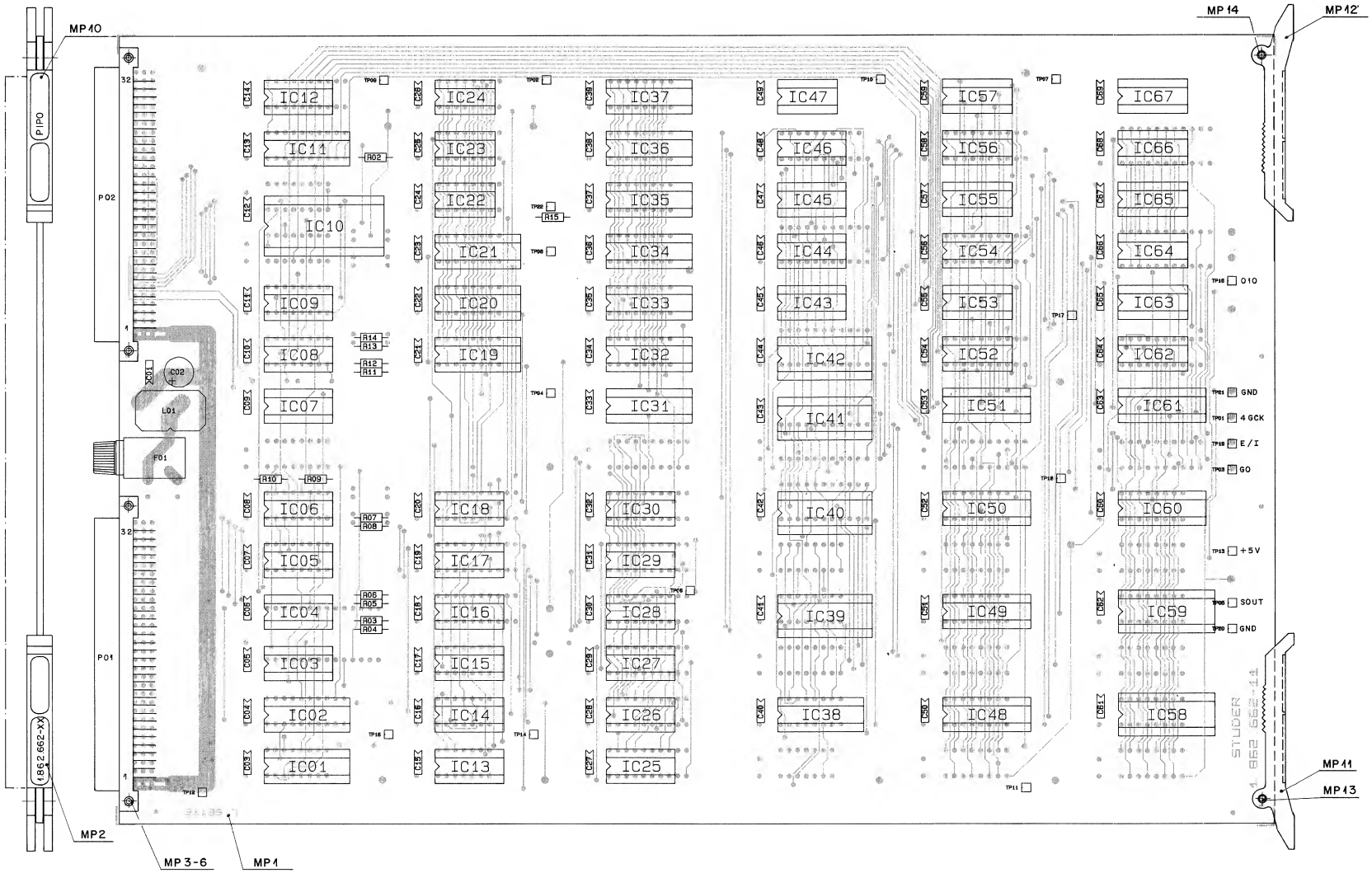

Schilder MP 7, 8, 9
aufgeklebt nach Fabrikationsmuster.

IC-Sockel nach PL bestückt.
z.B. XIC 31 = Sockel von IC 31.

PING PONG 1.862.662.20

IND.	POS.NO.	PART NO.	VALUE	SPECIFICATIONS / EQUIVALENT	MANUF.
	C.....1	59.06.0683	68 n	10% 63V	ANY
	C.....2	59.22.3471	470 u	-20%, 10V EL	ANY
	C.....3	59.06.0683	68 n	10%, 63V	ANY
	C.....4	59.06.0683	68 n	10%, 63V	ANY
	C.....5	59.06.0683	68 n	10%, 63V	ANY
	C.....6	59.06.0683	68 n	10%, 63V	ANY
	C.....7	59.06.0683	68 n	10%, 63V	ANY
	C.....8	59.06.0683	68 n	10%, 63V	ANY
	C.....9	59.06.0683	68 n	10%, 63V	ANY
	C....10	59.06.0683	68 n	10%, 63V	ANY
	C....11	59.06.0683	68 n	10%, 63V	ANY
	C....12	59.06.0683	68 n	10%, 63V	ANY
	C....13	59.06.0683	68 n	10%, 63V	ANY
	C....14	59.06.0683	68 n	10%, 63V	ANY
	C....15	59.06.0683	68 n	10%, 63V	ANY
	C....16	59.06.0683	68 n	10%, 63V	ANY
	C....17	59.06.0683	68 n	10%, 63V	ANY
	C....18	59.06.0683	68 n	10%, 63V	ANY
	C....19	59.06.0683	68 n	10%, 63V	ANY
	C....20	59.06.0683	68 n	10%, 63V	ANY
	C....21	59.06.0683	68 n	10%, 63V	ANY
	C....22	59.06.0683	68 n	10%, 63V	ANY
	C....23	59.06.0683	68 n	10%, 63V	ANY
	C....24	59.06.0683	68 n	10%, 63V	ANY
	C....25	59.06.0683	68 n	10%, 63V	ANY
	C....26	59.06.0683	68 n	10%, 63V	ANY
	C....27	59.06.0683	68 n	10%, 63V	ANY
	C....28	59.06.0683	68 n	10%, 63V	ANY
	C....29	59.06.0683	68 n	10%, 63V	ANY
	C....30	59.06.0683	68 n	10%, 63V	ANY
	C....31	59.06.0683	68 n	10%, 63V	ANY
	C....32	59.06.0683	68 n	10%, 63V	ANY
	C....33	59.06.0683	68 n	10%, 63V	ANY
	C....34	59.06.0683	68 n	10%, 63V	ANY
	C....35	59.06.0683	68 n	10%, 63V	ANY
	C....36	59.06.0683	68 n	10%, 63V	ANY
	C....37	59.06.0683	68 n	10%, 63V	ANY

IND.	POS.NO.	PART NO.	VALUE	SPECIFICATIONS / EQUIVALENT	MANUF.
	C....38	59.06.0683	68 n	10%, 63V	ANY
	C....39	59.06.0683	68 n	10%, 63V	ANY
	C....40	59.06.0683	68 n	10%, 63V	ANY
	C....41	59.06.0683	68 n	10%, 63V	ANY
	C....42	59.06.0683	68 n	10%, 63V	ANY
	C....43	59.06.0683	68 n	10%, 63V	ANY
	C....44	59.06.0683	68 n	10%, 63V	ANY
	C....45	59.06.0683	68 n	10%, 63V	ANY
	C....46	59.06.0683	68 n	10%, 63V	ANY
	C....47	59.06.0683	68 n	10%, 63V	ANY
	C....48	59.06.0683	68 n	10%, 63V	ANY
	C....49	59.06.0683	68 n	10%, 63V	ANY
	C....50	59.06.0683	68 n	10%, 63V	ANY
	C....51	59.06.0683	68 n	10%, 63V	ANY
	C....52	59.06.0683	68 n	10%, 63V	ANY
	C....53	59.06.0683	68 n	10%, 63V	ANY
	C....54	59.06.0683	68 n	10%, 63V	ANY
	C....55	59.06.0683	68 n	10%, 63V	ANY
	C....56	59.06.0683	68 n	10%, 63V	ANY
	C....57	59.06.0683	68 n	10%, 63V	ANY
	C....58	59.06.0683	68 n	10%, 63V	ANY
	C....59	59.06.0683	68 n	10%, 63V	ANY
	C....60	59.06.0683	68 n	10%, 63V	ANY
	C....61	59.06.0683	68 n	10%, 63V	ANY
	C....62	59.06.0683	68 n	10%, 63V	ANY
	C....63	59.06.0683	68 n	10%, 63V	ANY
	C....64	59.06.0683	68 n	10%, 63V	ANY
	C....65	59.06.0683	68 n	10%, 63V	ANY
	C....66	59.06.0683	68 n	10%, 63V	ANY
	C....67	59.06.0683	68 n	10%, 63V	ANY
	C....68	59.06.0683	68 n	10%, 63V	ANY
	C....69	59.06.0683	68 n	10%, 63V	ANY
	F.....1	51.01.0122		T3.15/250V, 5 x 20	ANY
	IC....1	50.17.7245		74 ACT 245	ANY
	IC....2	50.17.7245		74 ACT 245	ANY

IND.	POS.NO.	PART NO.	VALUE	SPECIFICATIONS / EQUIVALENT	MANUF.
	IC....3	50.15.0108		AM26 LS 31 PC/AM26 LS31 CN	ANY
	IC....4	50.15.0109		AM26 LS 33 PC/DS26 LS33 CN	ANY
	IC....5	50.15.0108		AM26 LS 31 PC/AM26 LS31 CN	ANY
	IC....6	50.15.0109		AM26 LS 33 PC/DS26 LS33 CN	ANY
	IC....7	50.06.0595		SN 74 LS 595 N	ANY
	IC....8	50.15.0109		AM26 LS 33 PC/DS26 LS33 CN	ANY
	IC....9	50.15.0108		AM26 LS 31 PC/AM26 LS31 CN	ANY
	IC...10	50.50.0010		PORTMASTER	St
	IC...11	50.21.0244		74 F 244	ANY
	IC...12	50.15.0109		AM26 LS 33 PC/DS26 LS33 CN	ANY
	IC...13	50.06.0595		SN 74 LS 595 N	ANY
	IC...14	50.06.0595		SN 74 LS 595 N	ANY
	IC...15	50.06.0595		SN 74 LS 595 N	ANY
	IC...16	50.06.0595		SN 74 LS 595 N	ANY
	IC...17	50.06.0595		SN 74 LS 595 N	ANY
	IC...18	50.06.0595		SN 74 LS 595 N	ANY
	IC...19	50.17.7374		74 ACT 374	ANY
	IC...20	50.17.7374		74 ACT 374	ANY
	IC...21	50.17.7374		74 ACT 374	ANY
	IC...22	50.06.0004		SN 74 LS 04 N	ANY
	IC...23	50.06.0113		SN 74 LS 113 N	ANY
	IC...24	50.06.0008		SN 74 LS 08 N	ANY
	IC...25	50.06.0595		SN 74 LS 595 N	ANY
	IC...26	50.06.0595		SN 74 LS 595 N	ANY
	IC...27	50.06.0595		SN 74 LS 595 N	ANY
	IC...28	50.06.0595		SN 74 LS 595 N	ANY
	IC...29	50.06.0595		SN 74 LS 595 N	ANY
	IC...30	50.06.0595		SN 74 LS 595 N	ANY
	IC...31	50.14.0114		TBP 28L 22N (SW 1.862.843.20)	ANY
	IC...32	50.14.0114		TBP 28L 22N (SW 1.862.842.20)	ANY
	IC...33	50.14.0114		TBP 28L 22N (SW 1.862.844.20)	ANY
	IC...34	50.14.0114		TBP 28L 22N (SW 1.862.841.20)	ANY
	IC...35	50.18.0100		16 V 8 - 25 LP (SW 1.862.840.20)	ANY
	IC...36	50.14.0114		TBP 28L 22N (SW 1.862.845.20)	ANY
	IC...37	50.17.7374		74 ACT 374	ANY
	IC...38	50.17.7374		74 ACT 374	ANY
	IC...39	50.14.0127		F 93 U 422 - 35 PC	ANY

IND.	POS.NO.	PART NO.	VALUE	SPECIFICATIONS / EQUIVALENT	MANUF.
	IC...40	50.14.0127		P 93 U 422 - 35 PC	ANY
	IC...41	50.14.0127		P 93 U 422 - 35 PC	ANY
	IC...42	50.14.0127		P 93 U 422 - 35 PC	ANY
	IC...43	50.17.7157		74 ACT 157	ANY
	IC...44	50.06.0595		SN 74 LS 595 N	ANY
	IC...45	50.06.0595		SN 74 LS 595 N	ANY
	IC...46	50.17.7157		74 ACT 157	ANY
	IC...47	50.17.7074		74 ACT 74	ANY
	IC...48	50.17.7244		74 ACT 244	ANY
	IC...49	50.17.7374		74 ACT 374	ANY
	IC...50	50.17.7244		74 ACT 244	ANY
	IC...51	50.17.7374		74 ACT 374	ANY
	IC...52	50.06.0597		SN 74 LS 597 N	ANY
	IC...53	50.06.0597		SN 74 LS 597 N	ANY
	IC...54	50.06.0597		SN 74 LS 597 N	ANY
	IC...55	50.06.0597		SN 74 LS 597 N	ANY
	IC...56	50.06.0597		SN 74 LS 597 N	ANY
	IC...57	50.06.0597		SN 74 LS 597 N	ANY
	IC...58	50.14.0127		P 93 U 422 - 35 PC	ANY
	IC...59	50.14.0127		P 93 U 422 - 35 PC	ANY
	IC...60	50.17.7374		74 ACT 374	ANY
	IC...61	50.17.7374		74 ACT 374	ANY
	IC...62	50.06.0597		SN 74 LS 597 N	ANY
	IC...63	50.06.0597		SN 74 LS 597 N	ANY
	IC...64	50.06.0597		SN 74 LS 597 N	ANY
	IC...65	50.06.0597		SN 74 LS 597 N	ANY
	IC...66	50.06.0597		SN 74 LS 597 N	ANY
	IC...67	50.06.0597		SN 74 LS 597 N	ANY
	L.....1	62.03.0030		110 uH, 3 A	ANY
	MP....1	1.862.662.11		PING PONG PCB	ANY
	MP....2	1.862.662.01		ETIKETTE	St
	MP....3	28.99.0119		ROHRNIETE D 2.5xO.15x 10	ANY
	MP....4	28.99.0119		ROHRNIETE D 2.5xO.15x 10	ANY
	MP....5	28.99.0119		ROHRNIETE D 2.5xO.15x 10	ANY
	MP....6	28.99.0119		ROHRNIETE D 2.5xO.15x 10	ANY

IND.	POS.NO.	PART NO.	VALUE	SPECIFICATIONS / EQUIVALENT	MANUF.
	MP....7	1.101.001.20		TEXT-ETIK. 5x20 HARDWARE -20	St
	MP....8	43.01.0108		SEE-WARNSCHILD	ANY
	MP....9	1.010.120.51		TEXT-ETIK. 5x20 (T3.15A)	St
(01)	MP....10	1.862.662.02		LABEL "PIPO"	St
(01)	MP....11	1.862.650.05		AUSWERFERHEBEL	St
(01)	MP....12	1.862.650.05		AUSWERFERHEBEL	St
(01)	MP....13	1.862.650.06		AUSWERFERSTIFT	St
(01)	MP....14	1.862.650.06		AUSWERFERSTIFT	St
	P.....1	54.01.0358		LEISTE 3 x 32 EURO PRINT	ANY
	P.....2	54.01.0358		LEISTE 3 x 32 EURO PRINT	ANY
	R.....2	57.11.3102	1 k	1%	ANY
	R.....3	57.11.3221	220	1%	ANY
	R.....4	57.11.3221	220	1%	ANY
	R.....5	57.11.3221	220	1%	ANY
	R.....6	57.11.3221	220	1%	ANY
	R.....7	57.11.3221	220	1%	ANY
	R.....8	57.11.3221	220	1%	ANY
	R.....9	57.11.3221	220	1%	ANY
	R....10	57.11.3221	220	1%	ANY
	R....11	57.11.3221	220	1%	ANY
	R....12	57.11.3221	220	1%	ANY
	R....13	57.11.3221	220	1%	ANY
	R....14	57.11.3221	220	1%	ANY
	R....15	57.11.3102	1 k	1%	ANY
	TP....1	54.02.0320	FLACH	2.8x0.8 **QTY 22 **********	ANY
	XF....1	53.03.0118		5 x 20 PRINT-LIEGEND	ANY
	XIC..31	53.03.0165		DIL 20-POL, LOET	ANY
	XIC..32	53.03.0165		DIL 20-POL, LOET	ANY
	XIC..33	53.03.0165		DIL 20-POL, LOET	ANY
	XIC..34	53.03.0165		DIL 20-POL, LOET	ANY
	XIC..35	53.03.0165		DIL 20-POL, LOET	ANY
	XIC..36	53.03.0165		DIL 20-POL, LOET	ANY

IND.	POS.NO.	PART NO.	VALUE	SPECIFICATIONS / EQUIVALENT	MANUF.
	XIC..39	53.03.0183		DIL 22-POL, LOET	ANY
	XIC..40	53.03.0183		DIL 22-POL, LOET	ANY
	XIC..41	53.03.0183		DIL 22-POL, LOET	ANY
	XIC..42	53.03.0183		DIL 22-POL, LOET	ANY
	XIC..58	53.03.0183		DIL 22-POL, LOET	ANY
	XIC..59	53.03.0183		DIL 22-POL, LOET	ANY

****
*** SERIEVERSION (4 Layer) Freigabe 12.04.89 ***
****

REMARKS:
1: MP 10-14 neu (Printauswerfer)

MANUFACTURERS:
St = STUDER / PH = PHILIPS

ABBREVIATIONS:
CER = CERAMIC / FILM = FILM TYPE / XF = CLAMP FOR FUSES /
XIC = IC SOCKET

ORIG 88/11/25 (01) 90/06/22

BLOCK DIAGRAM MASTER I/O

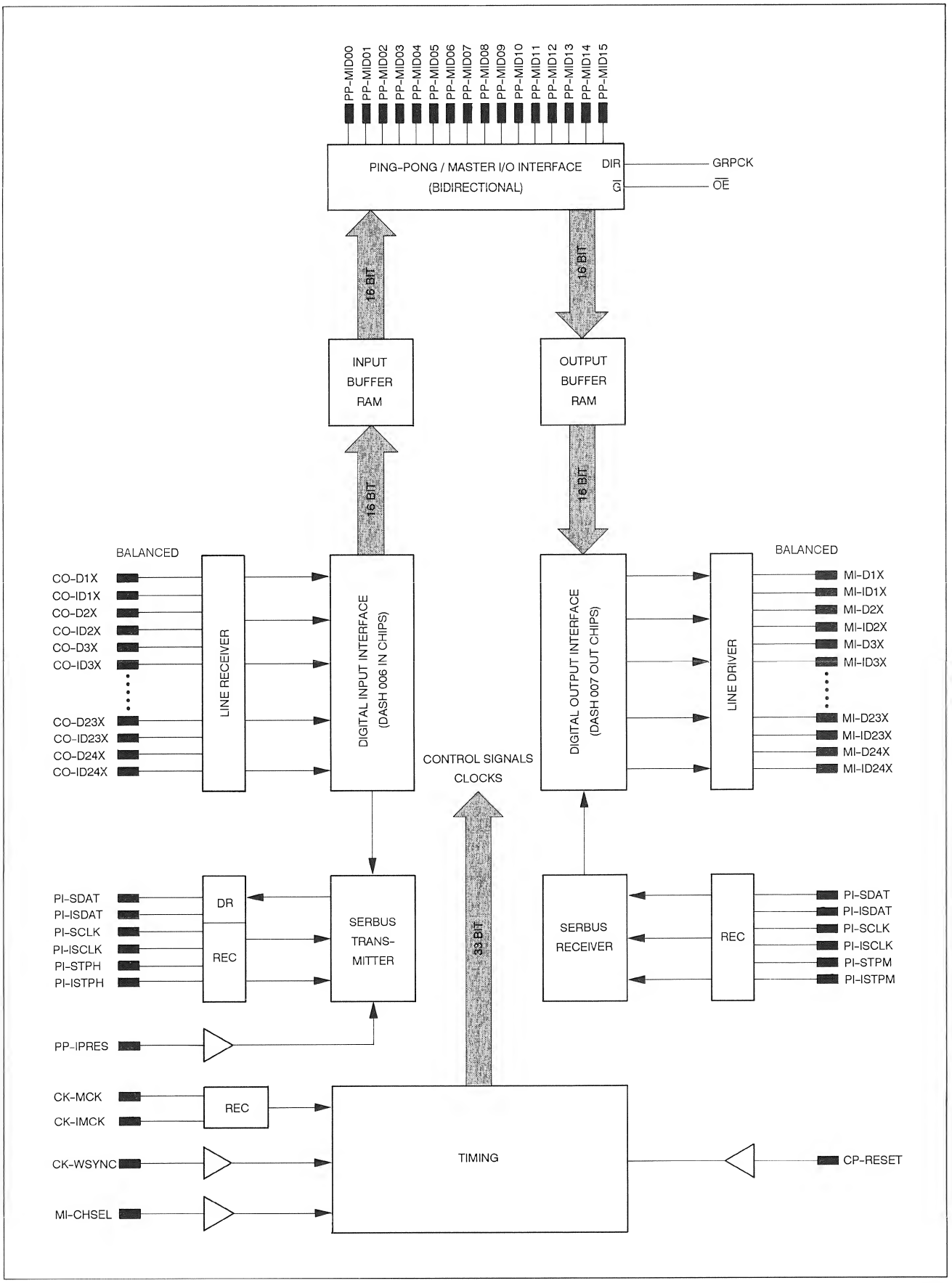

MASTER I/O 1.862.663.20

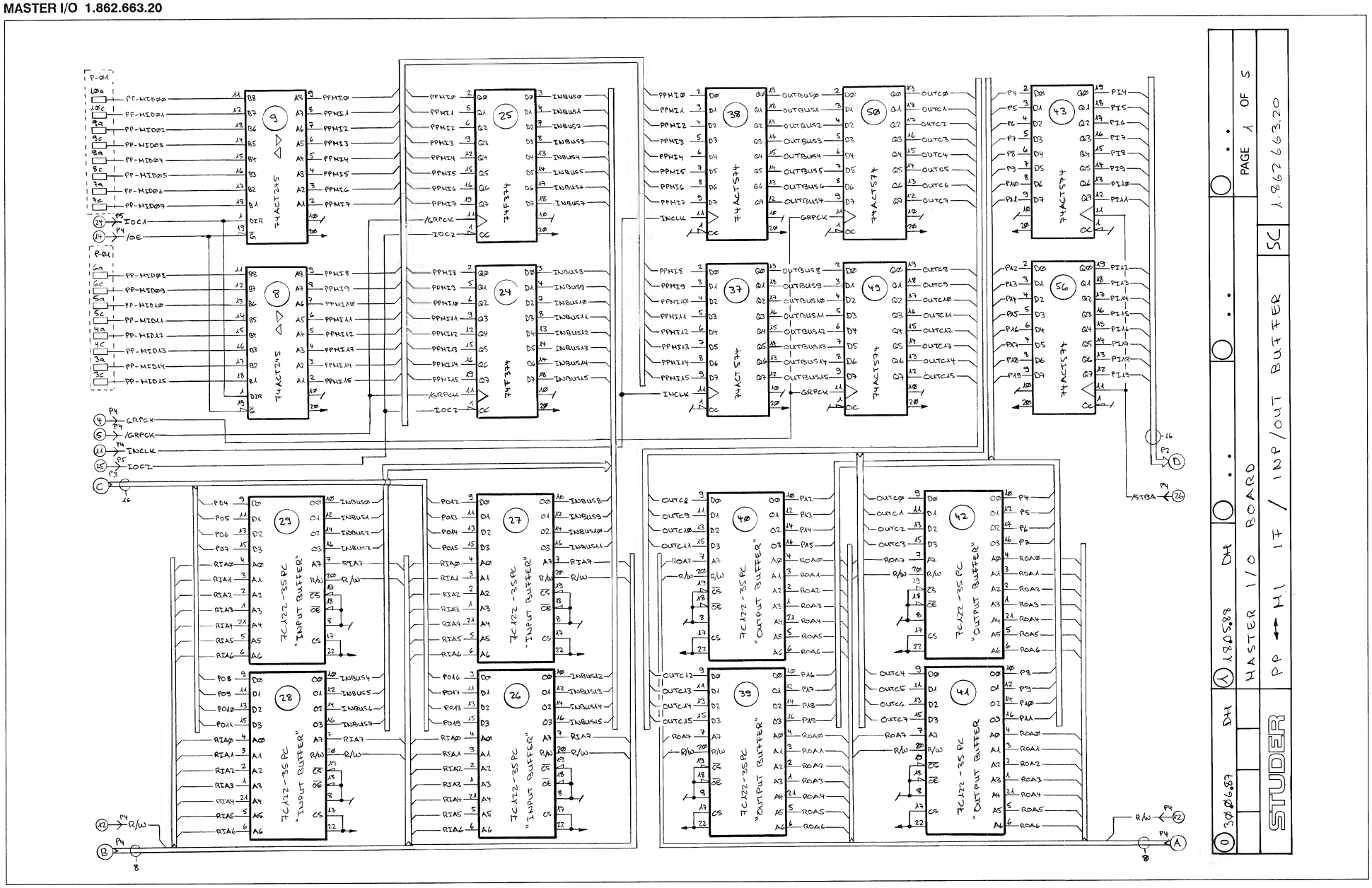

MASTER I/O 1.862.663.20

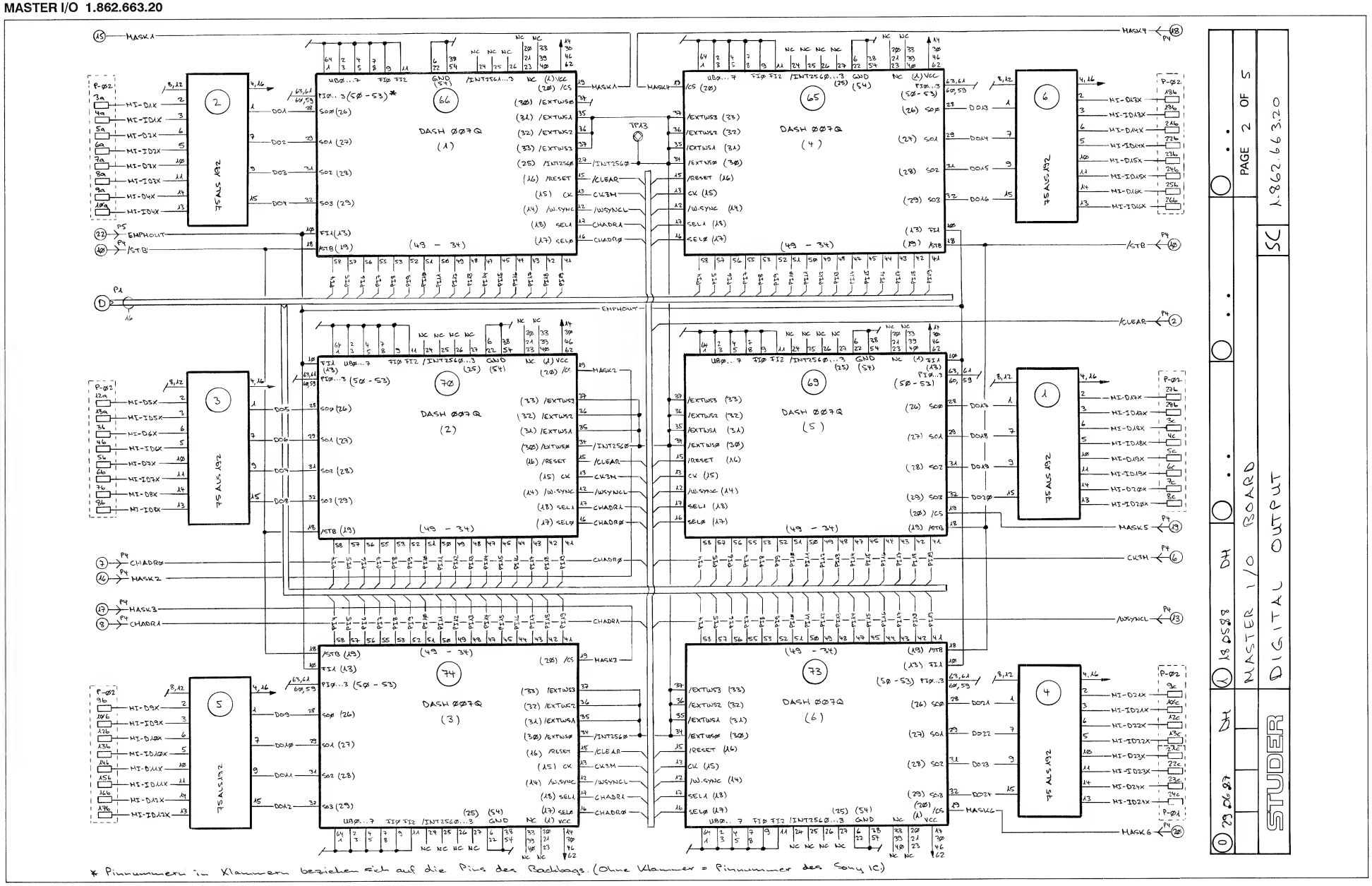

MASTER I/O 1.862.663.20

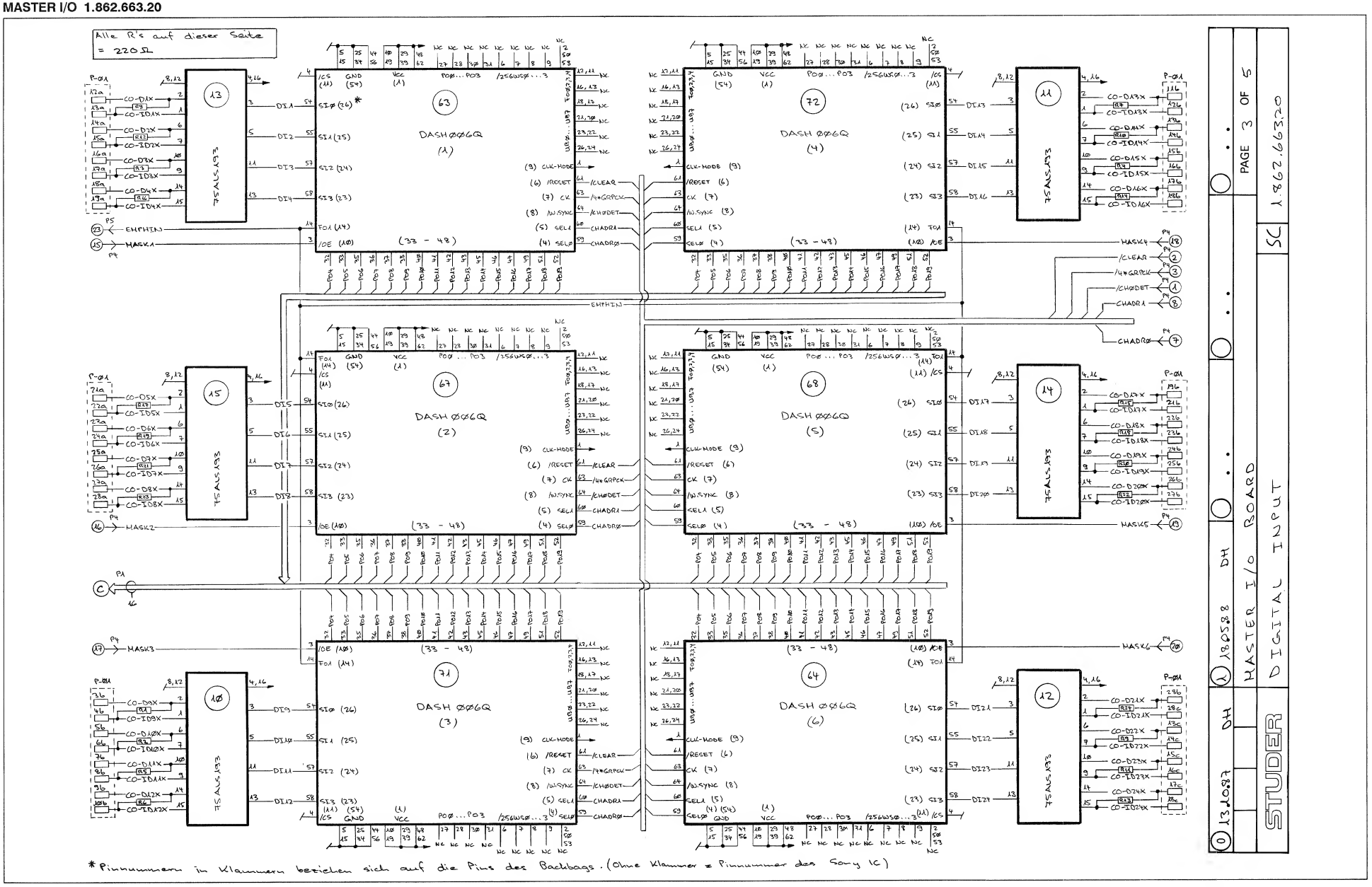

* Pinnummern in Klammern beziehen sich auf die Pins des Backbags. (Ohne Klammer = Pinnummer des Sony IC)

MASTER I/O 1.862.663.20

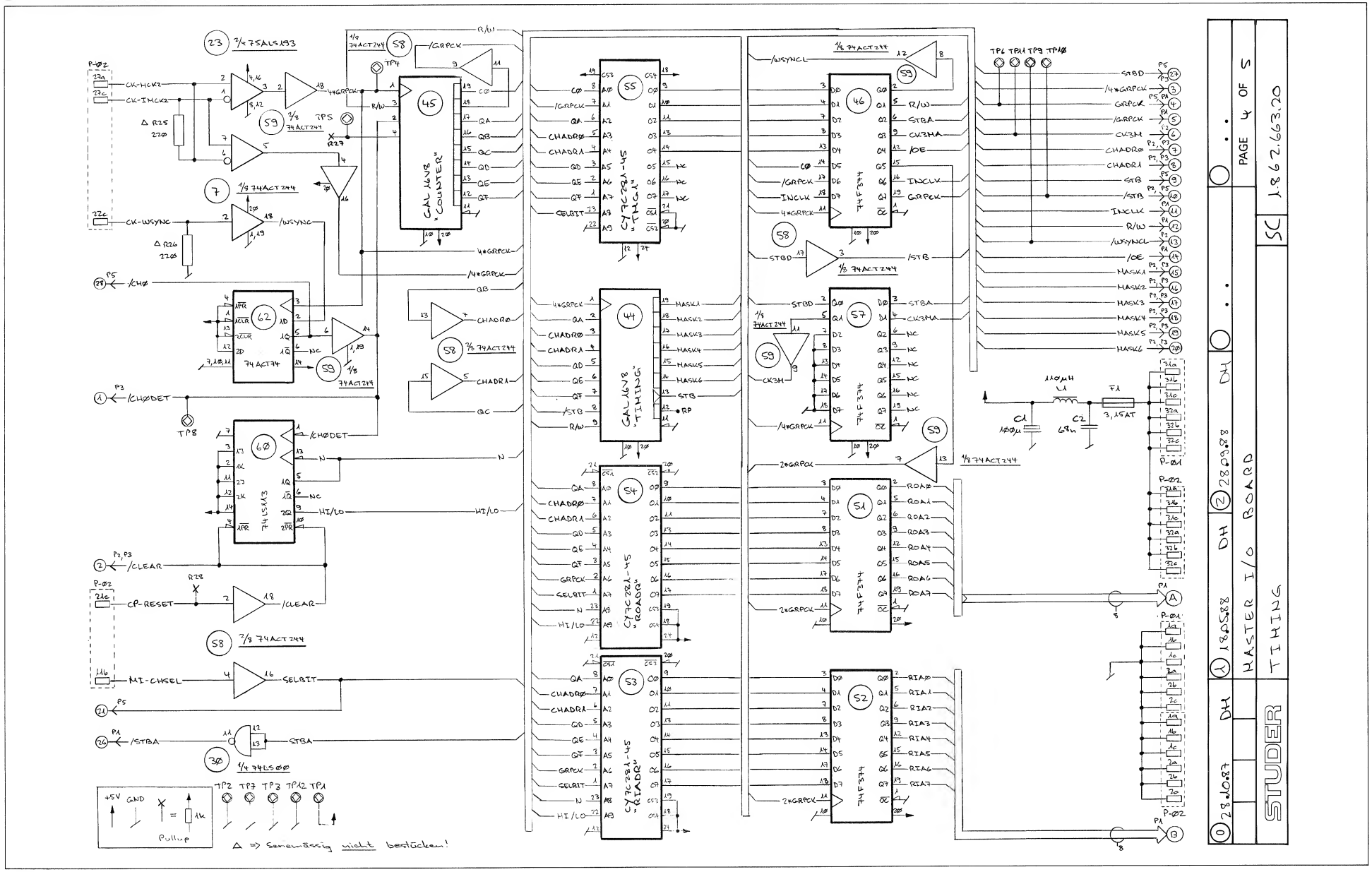

MASTER I/O 1.862.663.20

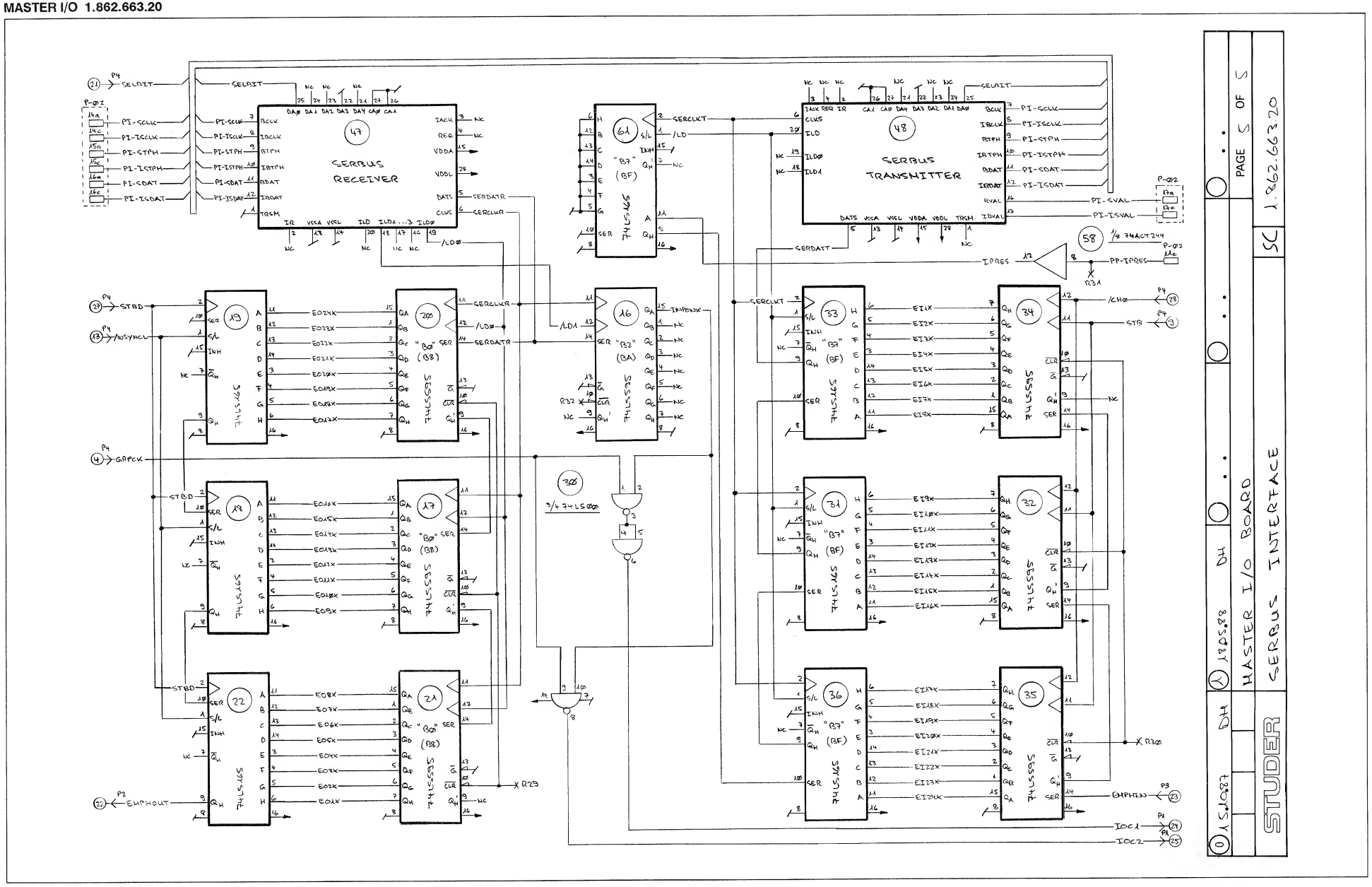

MASTER I/O 1.862.663.20

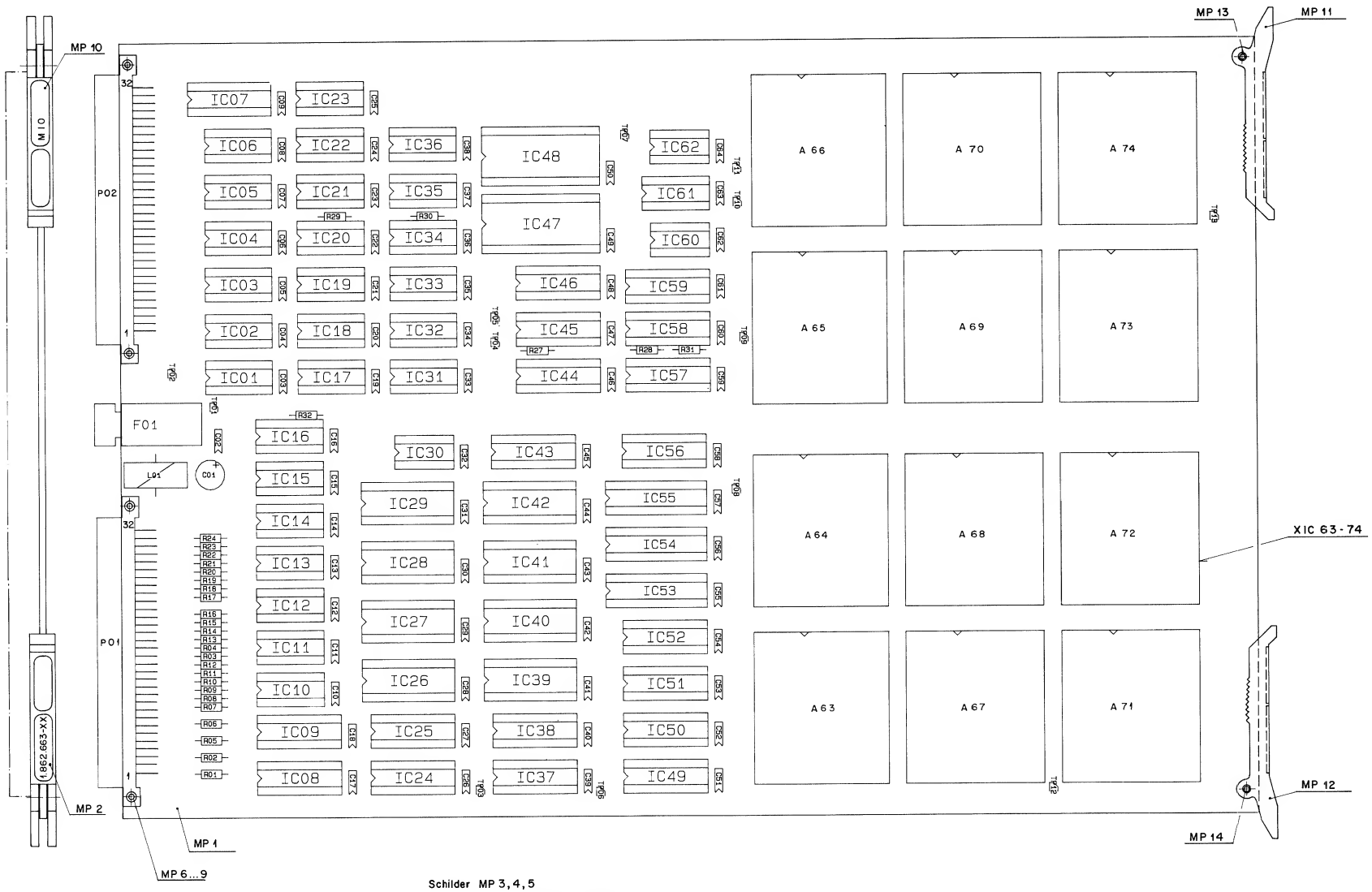

Schilder MP 3,4,5
aufgeklebt nach Fabrikationsmuster.

IC Sockel nach PL bestückt
z.B. XIC 23 = Sockel von IC 23

MASTER I/O 1.862.663.20

IND.	POS.NO.	PART NO.	VALUE	SPECIFICATIONS / EQUIVALENT	MANUF.
	A....63	1.862.688.00		ASSEMBLY 1.862.688.00 MIBG	St
	A....64	1.862.688.00		ASSEMBLY 1.862.688.00 MIBG	St
	A....65	1.862.689.00		ASSEMBLY 1.862.689.00 MIBG	St
	A....66	1.862.689.00		ASSEMBLY 1.862.689.00 MOBG	St
	A....67	1.862.688.00		ASSEMBLY 1.862.688.00 MIBG	St
	A....68	1.862.688.00		ASSEMBLY 1.862.688.00 MIBG	St
	A....69	1.862.689.00		ASSEMBLY 1.862.689.00 MOBG	St
	A....70	1.862.689.00		ASSEMBLY 1.862.689.00 MOBG	St
	A....71	1.862.688.00		ASSEMBLY 1.862.688.00 MIBG	St
	A....72	1.862.688.00		ASSEMBLY 1.862.688.00 MIBG	St
	A....73	1.862.689.00		ASSEMBLY 1.862.689.00 MOBG	St
	A....74	1.862.689.00		ASSEMBLY 1.862.689.00 MOBG	St
	C....1	59.41.3471	470 u	-20%/ 10V EL	ANY
	C....2	59.40.0683	68 n	10%, 63V	ANY
	C....3	59.40.0683	68 n	10%, 63V	ANY
	C....4	59.40.0683	68 n	10%, 63V	ANY
	C....5	59.40.0683	68 n	10%, 63V	ANY
	C....6	59.40.0683	68 n	10%, 63V	ANY
	C....7	59.40.0683	68 n	10%, 63V	ANY
	C....8	59.40.0683	68 n	10%, 63V	ANY
	C....9	59.40.0683	68 n	10%, 63V	ANY
	C....10	59.40.0683	68 n	10%, 63V	ANY
	C....11	59.40.0683	68 n	10%, 63V	ANY
	C....12	59.40.0683	68 n	10%, 63V	ANY
	C....13	59.40.0683	68 n	10%, 63V	ANY
	C....14	59.40.0683	68 n	10%, 63V	ANY
	C....15	59.40.0683	68 n	10%, 63V	ANY
	C....16	59.40.0683	68 n	10%, 63V	ANY
	C....17	59.40.0683	68 n	10%, 63V	ANY
	C....18	59.40.0683	68 n	10%, 63V	ANY
	C....19	59.40.0683	68 n	10%, 63V	ANY
	C....20	59.40.0683	68 n	10%, 63V	ANY
	C....21	59.40.0683	68 n	10%, 63V	ANY
	C....22	59.40.0683	68 n	10%, 63V	ANY
	C....23	59.40.0683	68 n	10%, 63V	ANY
	C....24	59.40.0683	68 n	10%, 63V	ANY

S T U D E R (01) 90/06/25 ZT MASTER I/O BOARD PL 1.862.663.20 PAGE 1

IND.	POS.NO.	PART NO.	VALUE	SPECIFICATIONS / EQUIVALENT	MANUF.
	C....25	59.40.0683	68 n	10%, 63V	ANY
	C....26	59.40.0683	68 n	10%, 63V	ANY
	C....27	59.40.0683	68 n	10%, 63V	ANY
	C....28	59.40.0683	68 n	10%, 63V	ANY
	C....29	59.40.0683	68 n	10%, 63V	ANY
	C....30	59.40.0683	68 n	10%, 63V	ANY
	C....31	59.40.0683	68 n	10%, 63V	ANY
	C....32	59.40.0683	68 n	10%, 63V	ANY
	C....33	59.40.0683	68 n	10%, 63V	ANY
	C....34	59.40.0683	68 n	10%, 63V	ANY
	C....35	59.40.0683	68 n	10%, 63V	ANY
	C....36	59.40.0683	68 n	10%, 63V	ANY
	C....37	59.40.0683	68 n	10%, 63V	ANY
	C....38	59.40.0683	68 n	10%, 63V	ANY
	C....39	59.40.0683	68 n	10%, 63V	ANY
	C....40	59.40.0683	68 n	10%, 63V	ANY
	C....41	59.40.0683	68 n	10%, 63V	ANY
	C....42	59.40.0683	68 n	10%, 63V	ANY
	C....43	59.40.0683	68 n	10%, 63V	ANY
	C....44	59.40.0683	68 n	10%, 63V	ANY
	C....45	59.40.0683	68 n	10%, 63V	ANY
	C....46	59.40.0683	68 n	10%, 63V	ANY
	C....47	59.40.0683	68 n	10%, 63V	ANY
	C....48	59.40.0683	68 n	10%, 63V	ANY
	C....49	59.40.0683	68 n	10%, 63V	ANY
	C....50	59.40.0683	68 n	10%, 63V	ANY
	C....51	59.40.0683	68 n	10%, 63V	ANY
	C....52	59.40.0683	68 n	10%, 63V	ANY
	C....53	59.40.0683	68 n	10%, 63V	ANY
	C....54	59.40.0683	68 n	10%, 63V	ANY
	C....55	59.40.0683	68 n	10%, 63V	ANY
	C....56	59.40.0683	68 n	10%, 63V	ANY
	C....57	59.40.0683	68 n	10%, 63V	ANY
	C....58	59.40.0683	68 n	10%, 63V	ANY
	C....59	59.40.0683	68 n	10%, 63V	ANY
	C....60	59.40.0683	68 n	10%, 63V	ANY
	C....61	59.40.0683	68 n	10%, 63V	ANY

S T U D E R (01) 90/06/25 ZT MASTER I/O BOARD PL 1.862.663.20 PAGE 2

IND.	POS.NO.	PART NO.	VALUE	SPECIFICATIONS / EQUIVALENT	MANUF.
	C....62	59.40.0683	68 n	10%, 63V	ANY
	C....63	59.40.0683	68 n	10%, 63V	ANY
	C....64	59.40.0683	68 n	10%, 63V	ANY
	F....1	51.01.0122		T3.15/250V, 5 * 20	ANY
	IC...1	50.15.0108		AK26 LS 31 PC/AK26 LS31 CN	ANY
	IC...2	50.15.0108		AK26 LS 31 PC/AK26 LS31 CN	ANY
	IC...3	50.15.0108		AK26 LS 31 PC/AK26 LS31 CN	ANY
	IC...4	50.15.0108		AK26 LS 31 PC/AK26 LS31 CN	ANY
	IC...5	50.15.0108		AK26 LS 31 PC/AK26 LS31 CN	ANY
	IC...6	50.15.0108		AK26 LS 31 PC/AK26 LS31 CN	ANY
	IC...7	50.17.7244		74 ACT 244	ANY
	IC...8	50.17.7245		74 ACT 245	ANY
	IC...9	50.17.7245		74 ACT 245	ANY
	IC...10	50.15.0109		AK26 LS33 PC/S526 LS33 CN	ANY
	IC...11	50.15.0109		AK26 LS33 PC/S526 LS33 CN	ANY
	IC...12	50.15.0109		AK26 LS33 PC/S526 LS33 CN	ANY
	IC...13	50.15.0109		AK26 LS33 PC/S526 LS33 CN	ANY
	IC...14	50.15.0109		AK26 LS33 PC/S526 LS33 CN	ANY
	IC...15	50.15.0109		AK26 LS33 PC/S526 LS33 CN	ANY
	IC...16	50.06.0995		SN 74 LS 595 N	ANY
	IC...17	50.06.0595		SN 74 LS 595 N	ANY
	IC...18	50.06.0165		SN 74 LS 165 N	ANY
	IC...19	50.06.0165		SN 74 LS 165 N	ANY
	IC...20	50.06.0595		SN 74 LS 595 N	ANY
	IC...21	50.06.0595		SN 74 LS 595 N	ANY
	IC...22	50.06.0165		SN 74 LS 165 N	ANY
	IC...23	50.15.0109		AK26 LS33 PC/S526 LS33 CN	ANY
	IC...24	50.21.0374		74 F 374	ANY
	IC...25	50.21.0374		74 F 374	ANY
	IC...26	50.14.0127		P 93 U 422 - 35 PC	ANY
	IC...27	50.14.0127		P 93 U 422 - 35 PC	ANY
	IC...28	50.14.0127		P 93 U 422 - 35 PC	ANY
	IC...29	50.14.0127		P 93 U 422 - 35 PC	ANY
	IC...30	50.06.0000		SN 74 LS 00 N	ANY
	IC...31	50.06.0165		SN 74 LS 165 N	ANY

S T U D E R (01) 90/06/25 ZT MASTER I/O BOARD PL 1.862.663.20 PAGE 3

IND.	POS.NO.	PART NO.	VALUE	SPECIFICATIONS / EQUIVALENT	MANUF.
	IC...32	50.06.0595		SN 74 LS 595 N	ANY
	IC...33	50.06.0165		SN 74 LS 165 N	ANY
	IC...34	50.06.0595		SN 74 LS 595 N	ANY
	IC...35	50.06.0595		SN 74 LS 595 N	ANY
	IC...36	50.06.0165		SN 74 LS 165 N	ANY
	IC...37	50.17.7574		74 ACT 574	ANY
	IC...38	50.17.7574		74 ACT 574	ANY
	IC...39	50.14.0127		P 93 U 422 - 35 PC	ANY
	IC...40	50.14.0127		P 93 U 422 - 35 PC	ANY
	IC...41	50.14.0127		P 93 U 422 - 35 PC	ANY
	IC...42	50.14.0127		P 93 U 422 - 35 PC	ANY
	IC...43	50.17.7574		74 ACT 574	ANY
	IC...44	50.18.0100		16 V 8 - 25 LP (SW 1.862.847.20)	ANY
	IC...45	50.18.0100		16 V 8 - 25 LP (SW 1.862.846.20)	ANY
	IC...46	50.21.0374		74 F 374	ANY
	IC...47	50.50.0010		PORTMASTER	St
	IC...48	50.50.0010		PORTMASTER	St
	IC...49	50.17.7574		74 ACT 574	ANY
	IC...50	50.17.7574		74 ACT 574	ANY
	IC...51	50.21.0374		74 F 374	ANY
	IC...52	50.21.0374		74 F 374	ANY
	IC...53	50.14.0150		CY 7 C 281-45 PC (SW 1.862.850.20)	ANY
	IC...54	50.14.0150		CY 7 C 281-45 PC (SW 1.862.849.20)	ANY
	IC...55	50.14.0150		CY 7 C 281-45 PC (SW 1.862.848.20)	ANY
	IC...56	50.17.7574		74 ACT 574	ANY
	IC...57	50.21.0374		74 F 374	ANY
	IC...58	50.17.7244		74 ACT 244	ANY
	IC...59	50.17.7244		74 ACT 244	ANY
	IC...60	50.06.0113		SN 74 LS 113 N	ANY
	IC...61	50.06.0165		SN 74 LS 165 N	ANY
	IC...62	50.17.7074		74 ACT 74	ANY
	L....1	62.03.0030	110 uH	3 A	ANY
	MP...1	1.862.663.11		MASTER I/O PCB	St
	MP...2	1.862.663.01		ETIKETTE	ANY
	MP...3	43.01.0108		ESE-WARNSCHILD	ANY

S T U D E R (01) 90/06/25 ZT MASTER I/O BOARD PL 1.862.663.20 PAGE 4

IND.	POS.NO.	PART NO.	VALUE	SPECIFICATIONS / EQUIVALENT	MANUF.
	MP...4	1.101.001.20		TEXT-ETIK. 5*20 HARDWARE -20	St
	MP...5	1.010.120.51		TEXT-ETIK. 5*20 (T3.15A)	St
	MP...6	28.99.0119		ROHRSIEIE D 2.5*0.15* 10	ANY
	MP...7	28.99.0119		ROHRSIEIE D 2.5*0.15* 10	ANY
	MP...8	28.99.0119		ROHRSIEIE D 2.5*0.15* 10	ANY
	MP...9	28.99.0119		ROHRSIEIE D 2.5*0.15* 10	ANY
(01)	MP...10	1.862.663.02		LABEL "MIC"	St
(01)	MP...11	1.862.650.05		AUSWERFERHEBEL	St
(01)	MP...12	1.862.650.05		AUSWERFERHEBEL	St
(01)	MP...13	1.862.650.06		AUSWERFERSTIFT	St
(01)	MP...14	1.862.650.06		AUSWERFERSTIFT	St
	P....1	54.01.0358		EUROCARD 3 * 32 CONNECTOR	ANY
	P....2	54.01.0358		EUROCARD 3 * 32 CONNECTOR	ANY
	R....1	57.11.3221	220	1%	ANY
	R....2	57.11.3221	220	1%	ANY
	R....3	57.11.3221	220	1%	ANY
	R....4	57.11.3221	220	1%	ANY
	R....5	57.11.3221	220	1%	ANY
	R....6	57.11.3221	220	1%	ANY
	R....7	57.11.3221	220	1%	ANY
	R....8	57.11.3221	220	1%	ANY
	R....9	57.11.3221	220	1%	ANY
	R....10	57.11.3221	220	1%	ANY
	R....11	57.11.3221	220	1%	ANY
	R....12	57.11.3221	220	1%	ANY
	R....13	57.11.3221	220	1%	ANY
	R....14	57.11.3221	220	1%	ANY
	R....15	57.11.3221	220	1%	ANY
	R....16	57.11.3221	220	1%	ANY
	R....17	57.11.3221	220	1%	ANY
	R....18	57.11.3221	220	1%	ANY
	R....19	57.11.3221	220	1%	ANY
	R....20	57.11.3221	220	1%	ANY
	R....21	57.11.3221	220	1%	ANY
	R....22	57.11.3221	220	1%	ANY

S T U D E R (01) 90/06/25 ZT MASTER I/O BOARD PL 1.862.663.20 PAGE 5

IND.	POS.NO.	PART NO.	VALUE	SPECIFICATIONS / EQUIVALENT	MANUF.
	R....23	57.11.3221	220	1%	ANY
	R....24	57.11.3221	220	1%	ANY
	R....27	57.11.3102	1 k	1%	ANY
	R....28	57.11.3102	1 k	1%	ANY
	R....29	57.11.3102	1 k	1%	ANY
	R....30	57.11.3102	1 k	1%	ANY
	R....31	57.11.3102	1 k	1%	ANY
	R....32	57.11.3102	1 k	1%	ANY
	TP...1	54.02.0320		TESTPOINT	ANY
	TP...2	54.02.0320		TESTPOINT	ANY
	TP...3	54.02.0320		TESTPOINT	ANY
	TP...4	54.02.0320		TESTPOINT	ANY
	TP...5	54.02.0320		TESTPOINT	ANY
	TP...6	54.02.0320		TESTPOINT	ANY
	TP...7	54.02.0320		TESTPOINT	ANY
	TP...8	54.02.0320		TESTPOINT	ANY
	TP...9	54.02.0320		TESTPOINT	ANY
	TP...10	54.02.0320		TESTPOINT	ANY
	TP...11	54.02.0320		TESTPOINT	ANY
	TP...12	54.02.0320		TESTPOINT	ANY
	TP...13	54.02.0320		TESTPOINT	ANY
	XF...1	53.03.0118		FUSE HOLDER	ANY
	XIC...1	53.03.0168		DIL 16-POL	ANY
	XIC...2	53.03.0168		DIL 16-POL	ANY
	XIC...3	53.03.0168		DIL 16-POL	ANY
	XIC...4	53.03.0168		DIL 16-POL	ANY
	XIC...5	53.03.0168		DIL 16-POL	ANY
	XIC...6	53.03.0168		DIL 16-POL	ANY
	XIC..10	53.03.0168		DIL 16-POL	ANY
	XIC..11	53.03.0168		DIL 16-POL	ANY
	XIC..12	53.03.0168		DIL 16-POL	ANY
	XIC..13	53.03.0168		DIL 16-POL	ANY
	XIC..14	53.03.0168		DIL 16-POL	ANY
	XIC..15	53.03.0168		DIL 16-POL	ANY

S T U D E R (01) 90/06/25 ZT MASTER I/O BOARD PL 1.862.663.20 PAGE 6

IND.	POS.NO.	PART NO.	VALUE	SPECIFICATIONS / EQUIVALENT	MANUF.
	XIC..16	53.03.0168		DIL 16-POL	ANY
	XIC..23	53.03.0160		DIL 16-POL	ANY
	XIC..26	53.03.0183		DIL 22-POL/ RM4	ANY
	XIC..27	53.03.0183		DIL 22-POL/ RM4	ANY
	XIC..28	53.03.0183		DIL 22-POL/ RM4	ANY
	XIC..29	53.03.0183		DIL 22-POL/ RM4	ANY
	XIC..39	53.03.0183		DIL 22-POL/ RM4	ANY
	XIC..40	53.03.0183		DIL 22-POL/ RM4	ANY
	XIC..41	53.03.0183		DIL 22-POL/ RM4	ANY
	XIC..42	53.03.0183		DIL 22-POL/ RM4	ANY
	XIC..44	53.03.0165		DIL 20-POL	ANY
	XIC..45	53.03.0165		DIL 20-POL	ANY
	XIC..53	53.03.0182		DIL 24-POL	ANY
	XIC..54	53.03.0182		DIL 24-POL	ANY
	XIC..55	53.03.0182		DIL 24-POL	ANY
	XIC..63	53.03.0218		SINGLE LINE, DTY=54 **********	ANY
	XIC..64	53.03.0218		SINGLE LINE, DTY=54 **********	ANY
	XIC..65	53.03.0218		SINGLE LINE, DTY=54 **********	ANY
	XIC..66	53.03.0218		SINGLE LINE, DTY=54 **********	ANY
	XIC..67	53.03.0218		SINGLE LINE, DTY=54 **********	ANY
	XIC..68	53.03.0218		SINGLE LINE, DTY=54 **********	ANY
	XIC..69	53.03.0218		SINGLE LINE, DTY=54 **********	ANY
	XIC..70	53.03.0218		SINGLE LINE, DTY=54 **********	ANY
	XIC..71	53.03.0218		SINGLE LINE, DTY=54 **********	ANY
	XIC..72	53.03.0218		SINGLE LINE, DTY=54 **********	ANY
	XIC..73	53.03.0218		SINGLE LINE, DTY=54 **********	ANY
	XIC..74	53.03.0218		SINGLE LINE, DTY=54 **********	ANY

S T U D E R (01) 90/06/25 ZT MASTER I/O BOARD PL 1.862.663.20 PAGE 7

IND.	POS.NO.	PART NO.	VALUE	SPECIFICATIONS / EQUIVALENT	MANUF.

REMARKS: SERIEVERSION FREIGABE: 30.05.89
****

Aenderungen:
01: MF 10-14 neu (Print-Auswerfer)

MANUFACTURERS:
St = STUDER / Ph = PHILIPS / Sc = SONY

ABBREVIATIONS:
CER = CERAMIC / FILM = FILM TYPE / XF = CLAMP FOR FUSES /
XIC = IC SOCKET

ORIG 88/12/06 (01) 90/06/25

S T U D E R (01) 90/06/25 ZT MASTER I/O BOARD PL 1.862.663.20 PAGE 8

BLOCK DIAGRAM AES/EBU INTERFACE

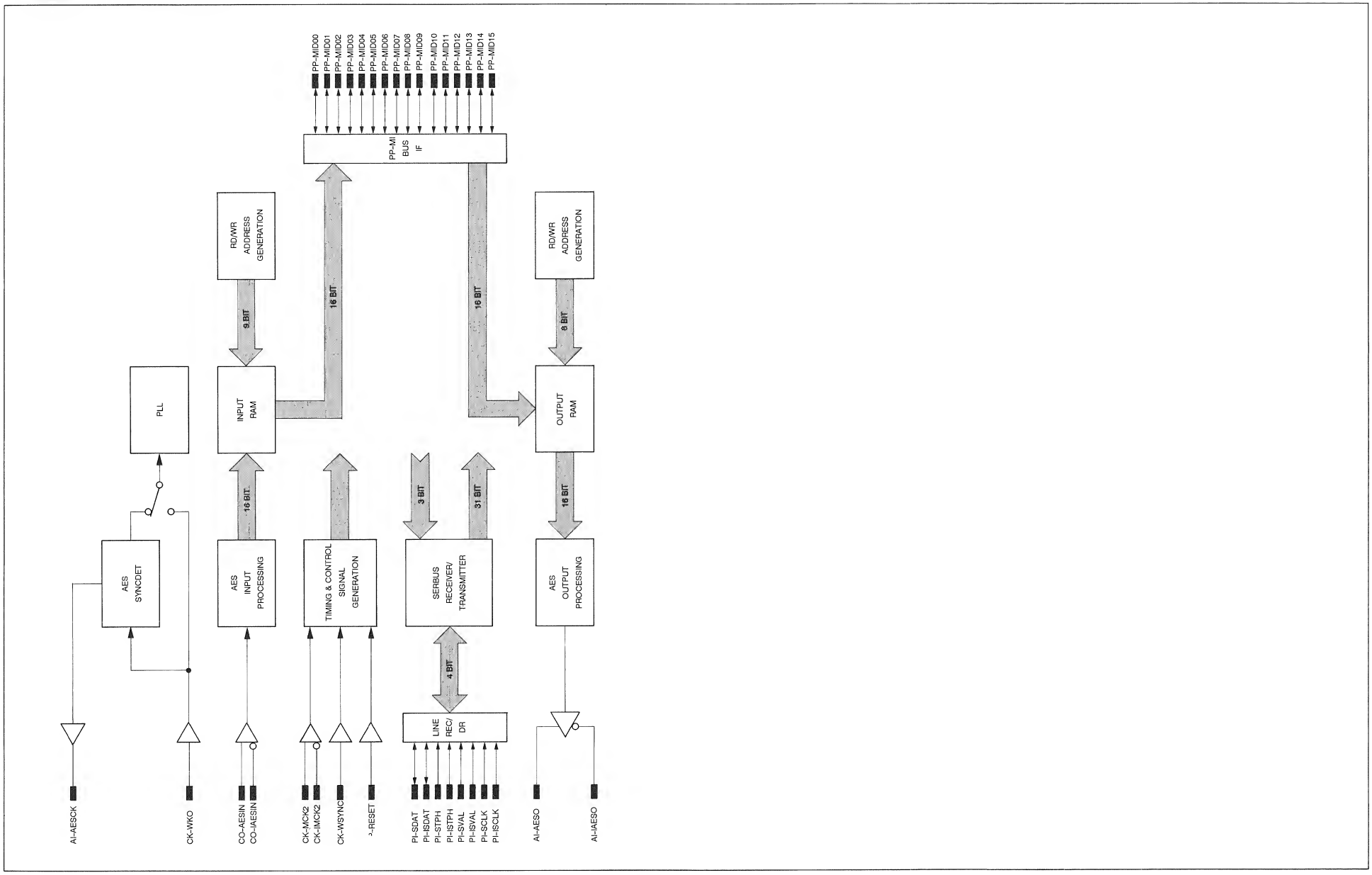

BLOCK DIAGRAM AES/EBU INTERFACE

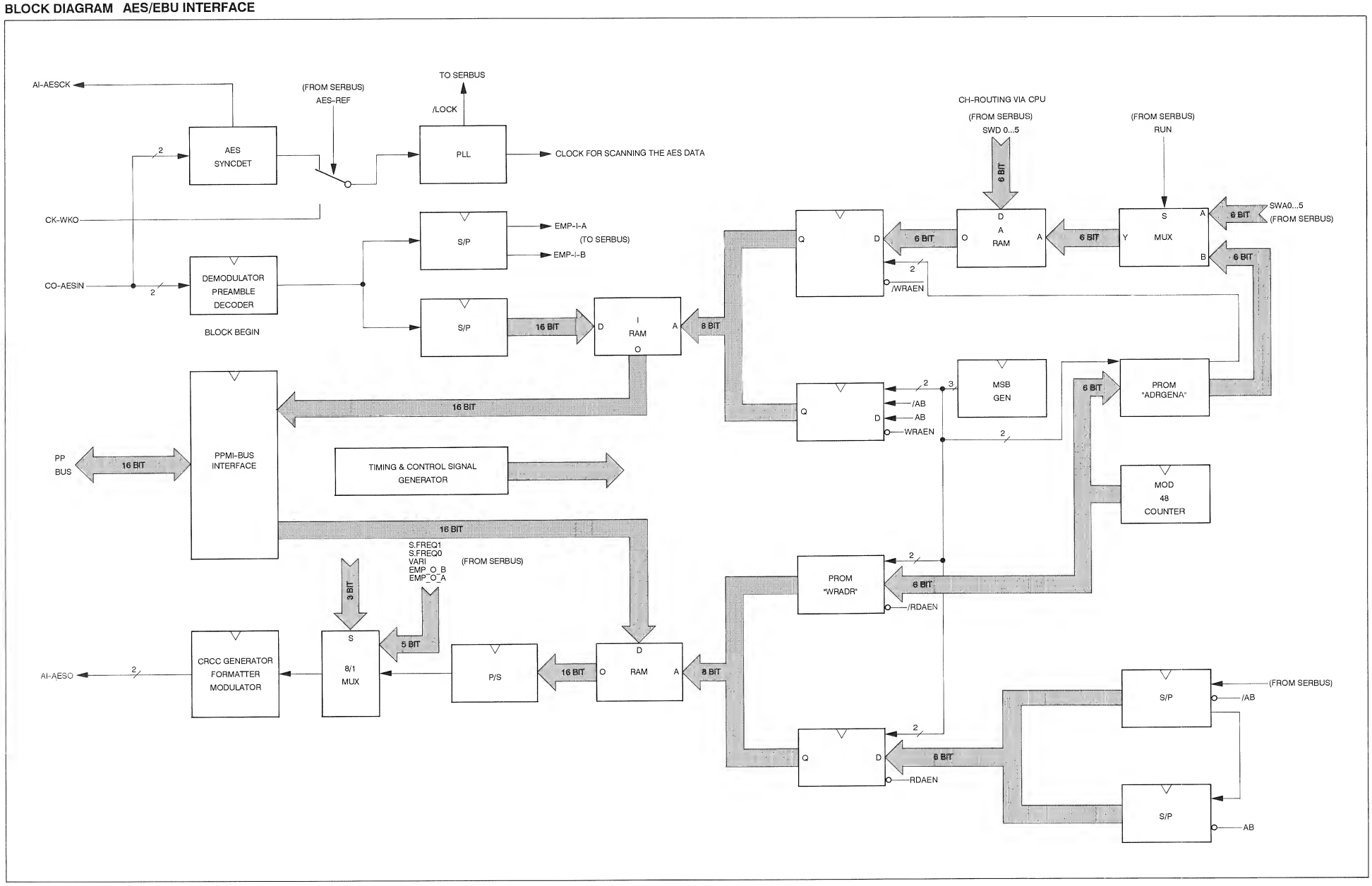

AES/EBU INTERFACE 1.862.664.22

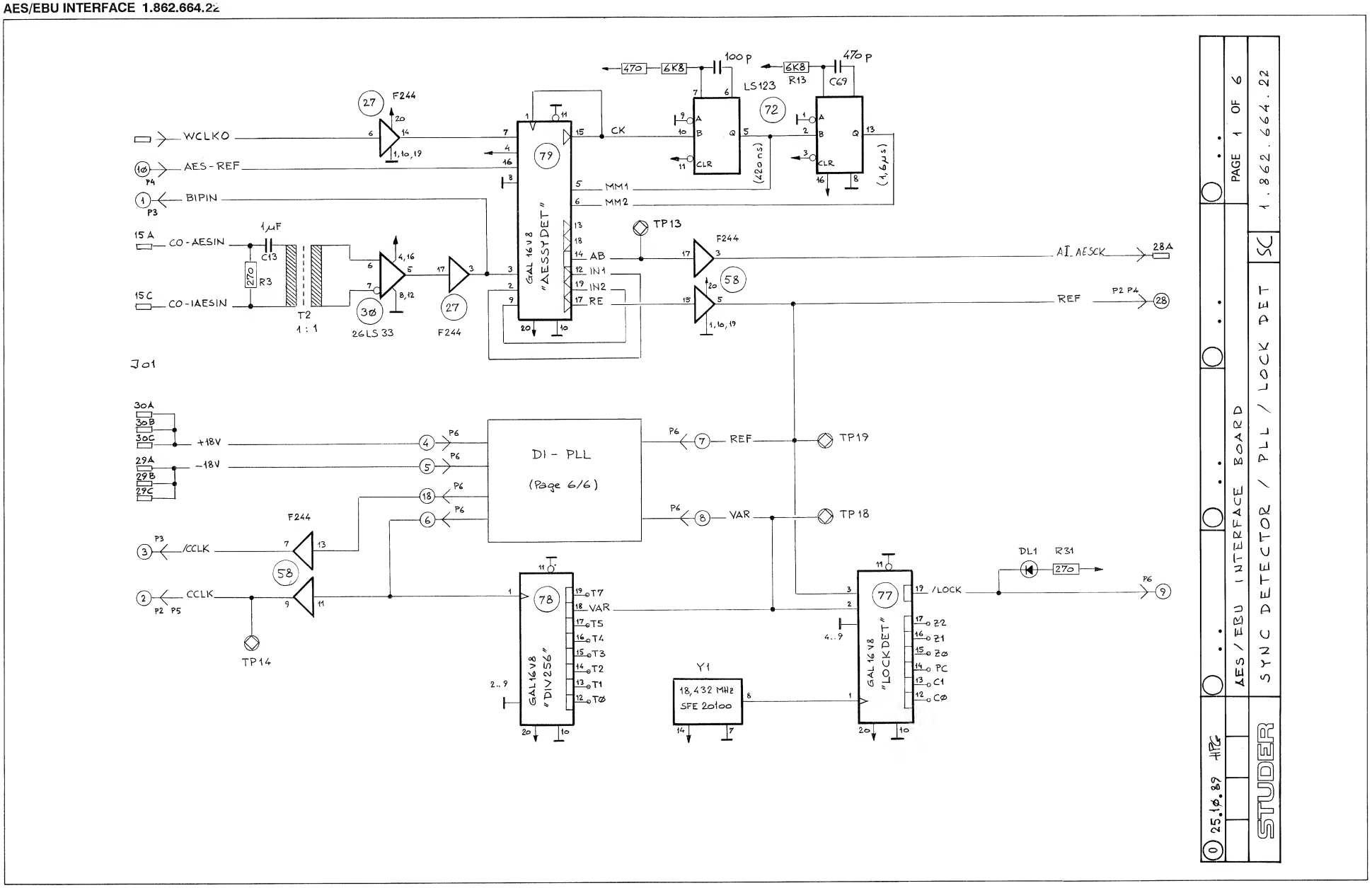

AES/EBU INTERFACE 1.862.664.22

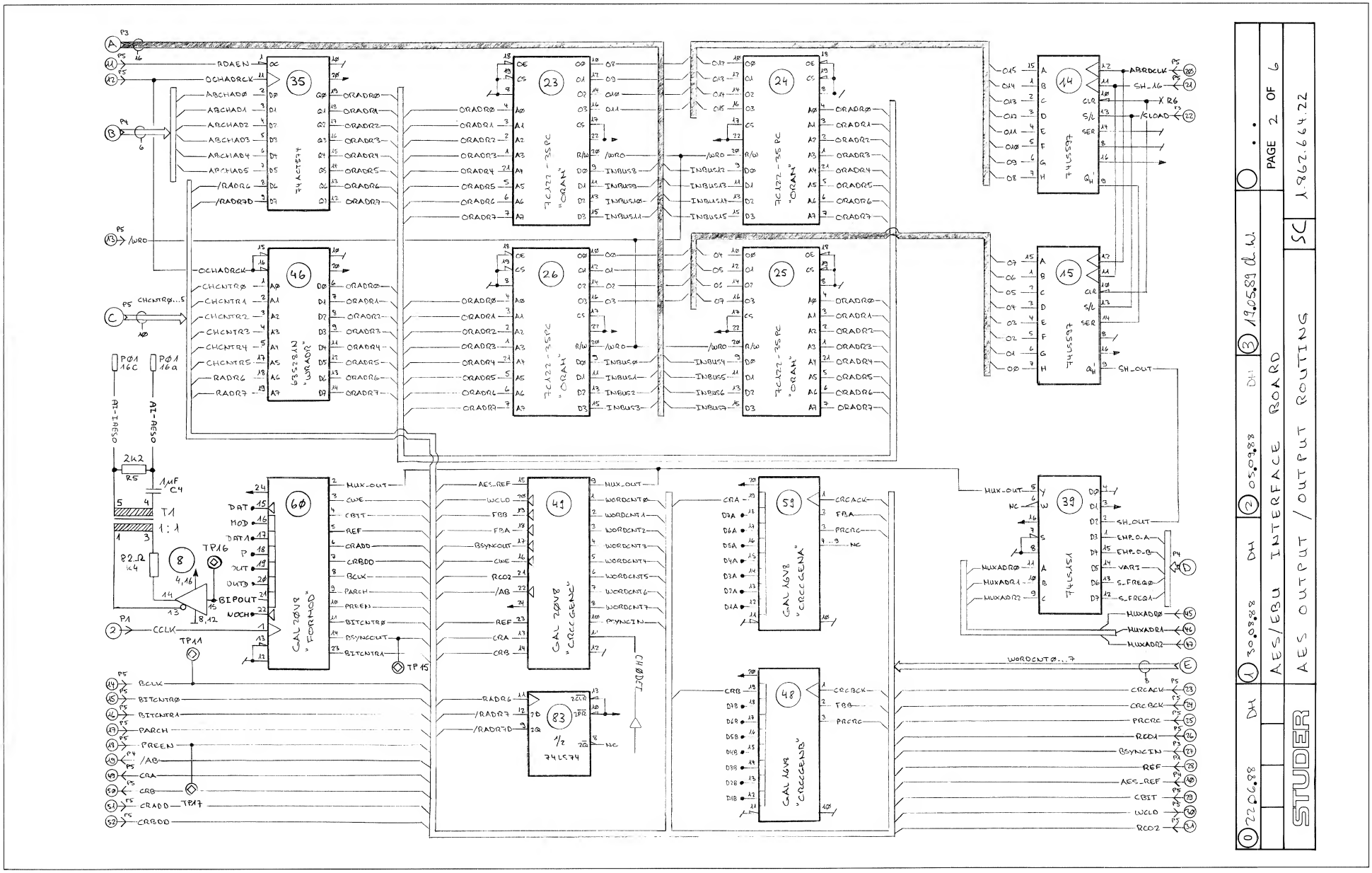

AES/EBU INTERFACE 1.862.664.22

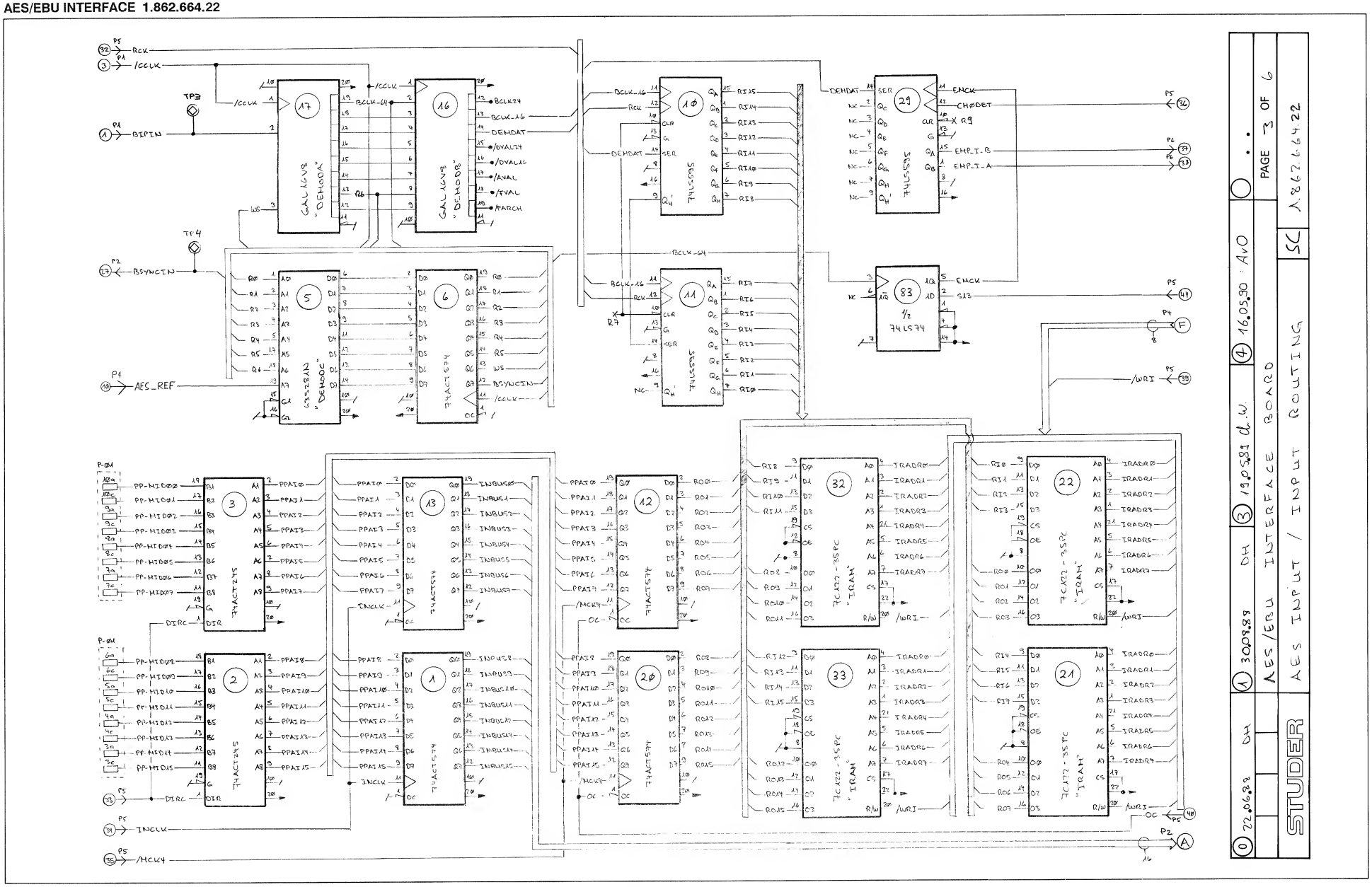

AES/EBU INTERFACE 1.862.664.22

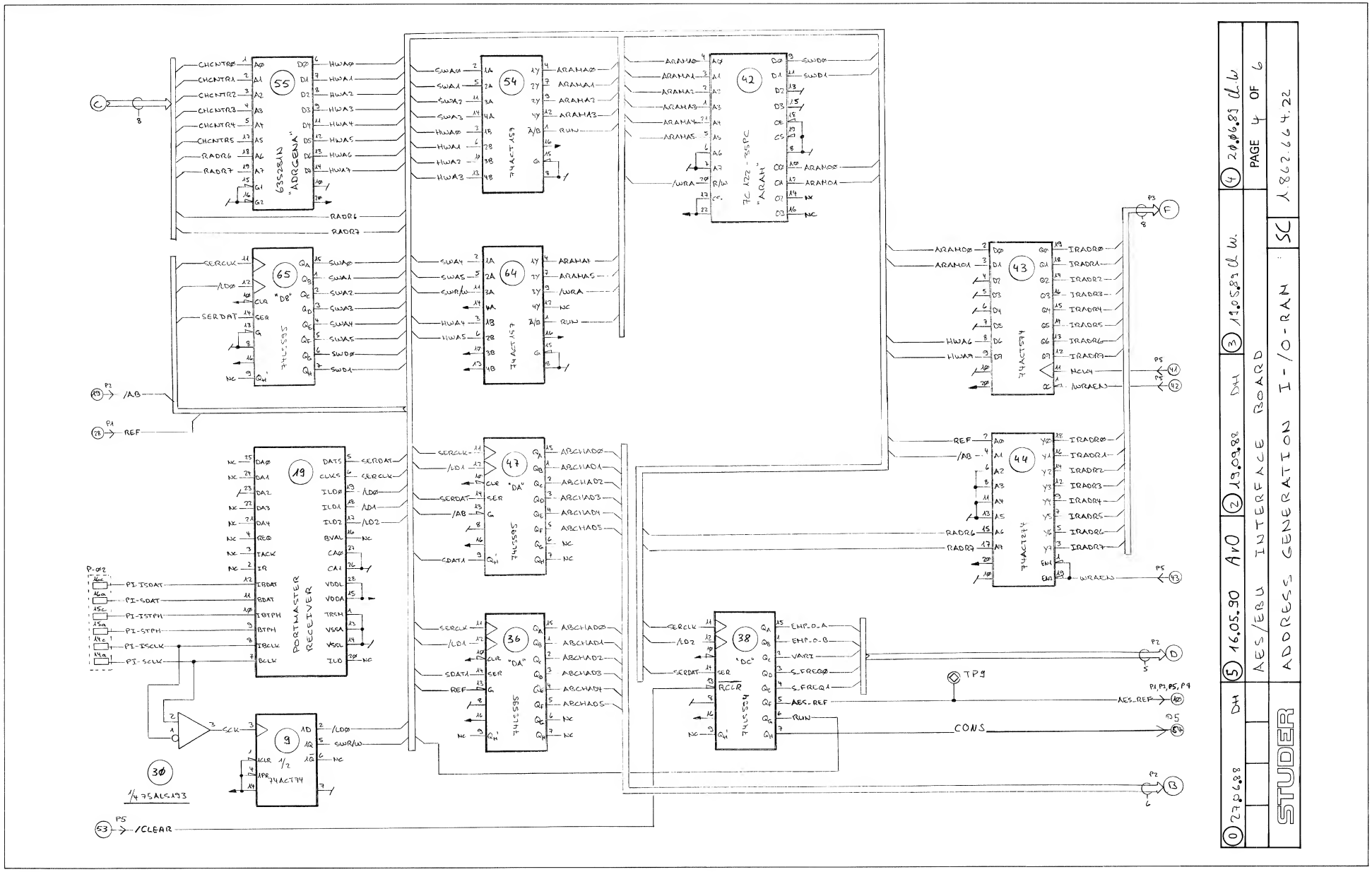

AES/EBU INTERFACE 1.862.664.22

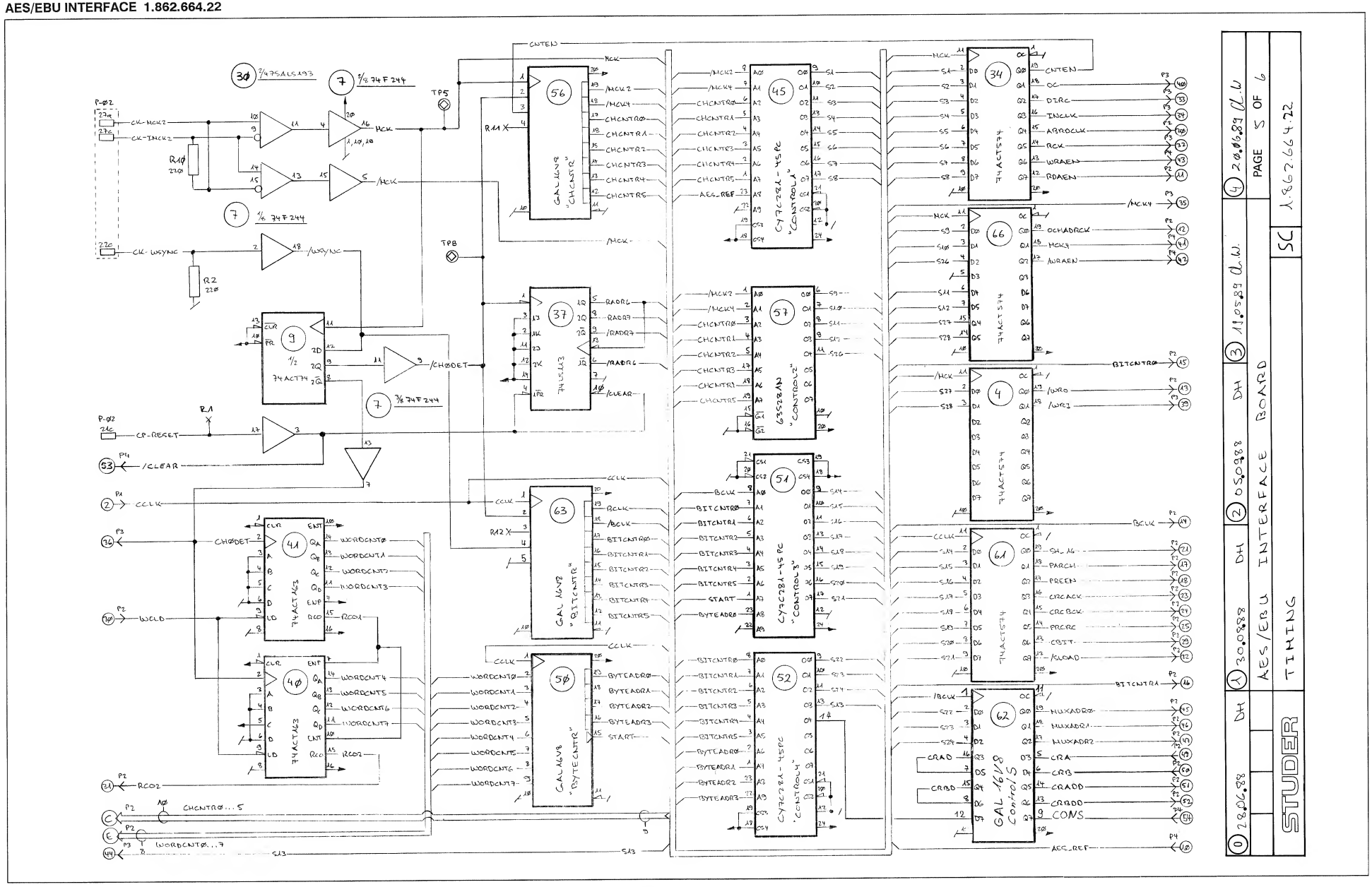

AES/EBU INTERFACE 1.862.664.22

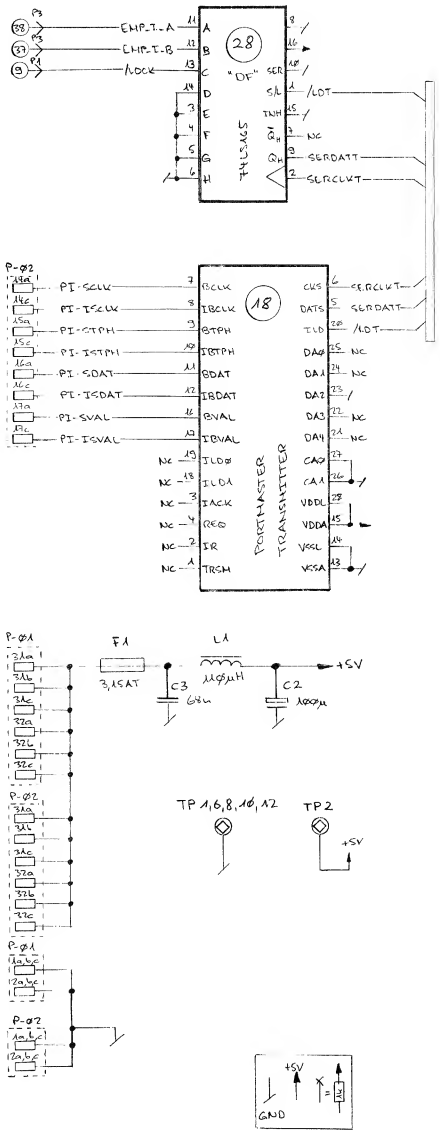

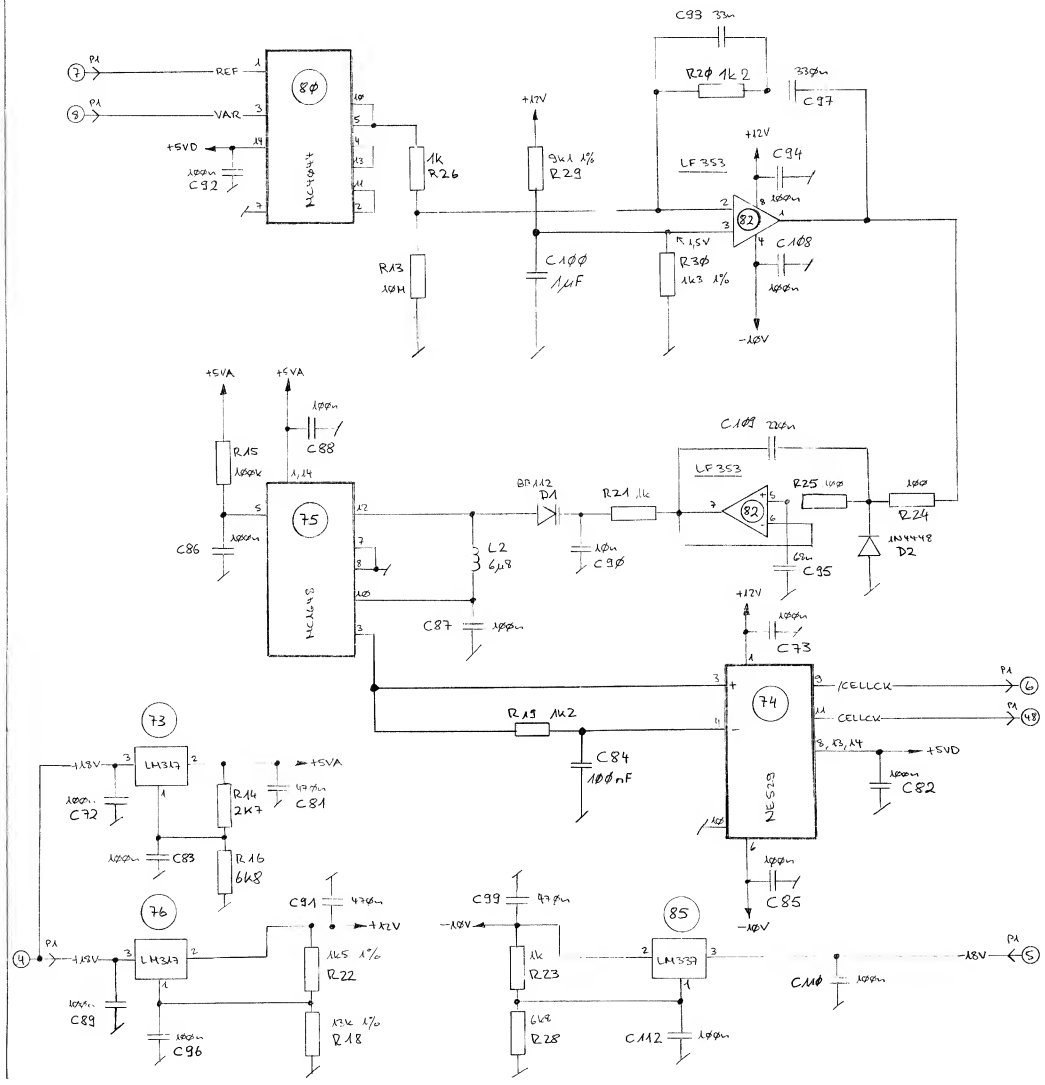

0 29.06.88	DH	1 30.08.88	DH	3 19.05.89	A.W.
STUDER		AES/EBU INTERFACE BOARD			
		SERBUS TRSH / PLL			
				PAGE 6 OF 6	
				SC	1.862.664.22

AES/EBU INTERFACE 1.862.664.22

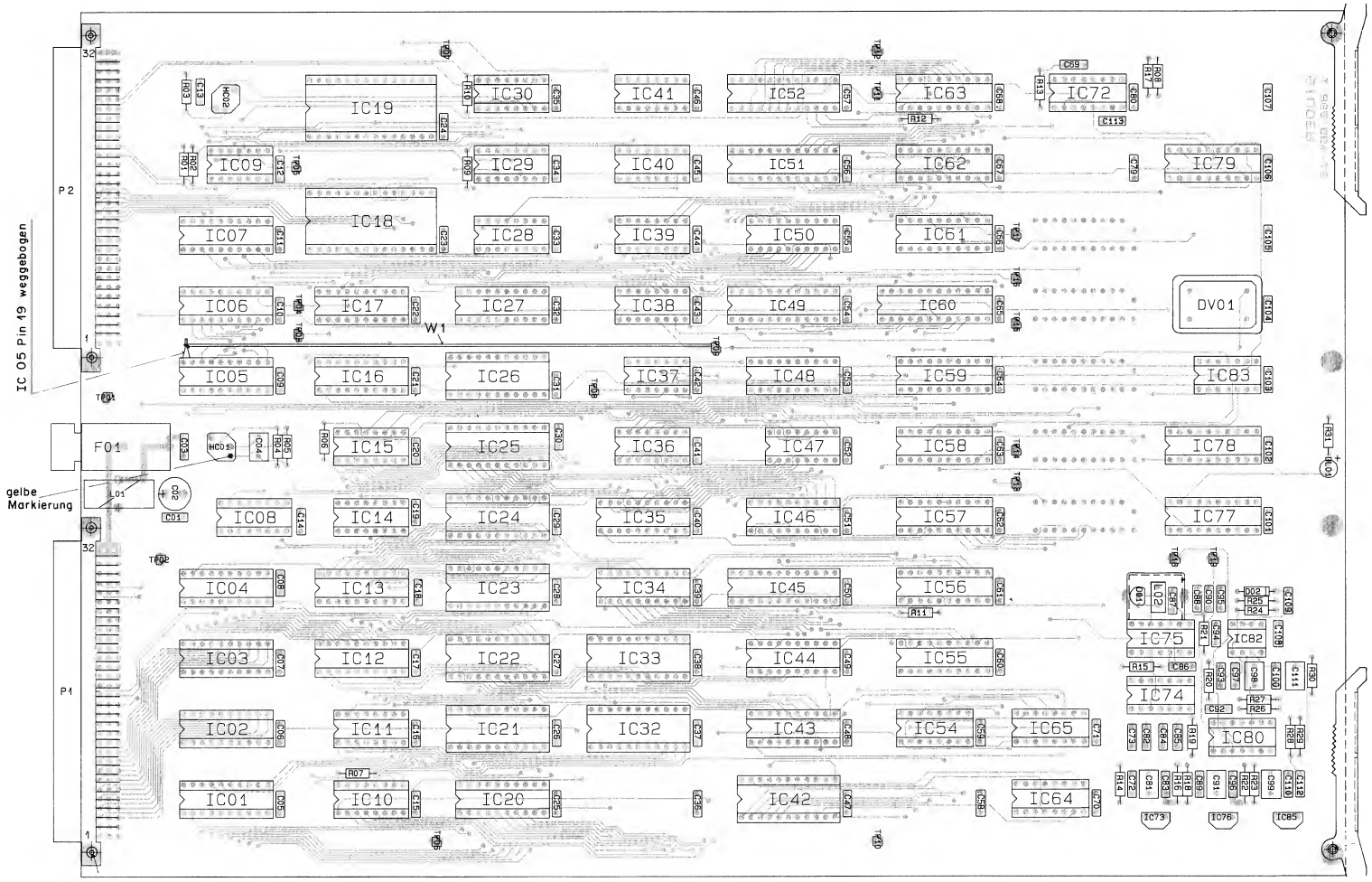

AES/EBU INTERFACE 1.862.664.22

IND.	POS.NO.	PART NO.	VALUE	SPECIFICATIONS / EQUIVALENT	MANUF.
	C....1	59.06.0683	.068 u	10%, 63V , PETF	ANY
	C....2	59.22.4471	470 u	-20%, 16V , EL	ANY
	C....3	59.06.0683	.068 u	10%, 63V , PETF	ANY
	C....4	59.06.0105	1.0 u	10%, 50V , PETF	ANY
	C....5	59.06.0683	.068 u	10%, 63V , PETF	ANY
	C....6	59.06.0683	.068 u	10%, 63V , PETF	ANY
	C....7	59.06.0683	.068 u	10%, 63V , PETF	ANY
	C....8	59.06.0683	.068 u	10%, 63V , PETF	ANY
	C....9	59.06.0683	.068 u	10%, 63V , PETF	ANY
	C....10	59.06.0683	.068 u	10%, 63V , PETF	ANY
	C....11	59.06.0683	.068 u	10%, 63V , PETF	ANY
	C....12	59.06.0683	.068 u	10%, 63V , PETF	ANY
	C....13	59.06.0105	1.0 u	10%, 63V , PETF	ANY
	C....14	59.06.0683	.068 u	10%, 63V , PETF	ANY
	C....15	59.06.0683	.068 u	10%, 63V , PETF	ANY
	C....16	59.06.0683	.068 u	10%, 63V , PETF	ANY
	C....17	59.06.0683	.068 u	10%, 63V , PETF	ANY
	C....18	59.06.0683	.068 u	10%, 63V , PETF	ANY
	C....19	59.06.0683	.068 u	10%, 63V , PETF	ANY
	C....20	59.06.0683	.068 u	10%, 63V , PETF	ANY
	C....21	59.06.0683	.068 u	10%, 63V , PETF	ANY
	C....22	59.06.0683	.068 u	10%, 63V , PETF	ANY
	C....23	59.06.0683	.068 u	10%, 63V , PETF	ANY
	C....24	59.06.0683	.068 u	10%, 63V , PETF	ANY
	C....25	59.06.0683	.068 u	10%, 63V , PETF	ANY
	C....26	59.06.0683	.068 u	10%, 63V , PETF	ANY
	C....27	59.06.0683	.068 u	10%, 63V , PETF	ANY
	C....28	59.06.0683	.068 u	10%, 63V , PETF	ANY
	C....29	59.06.0683	.068 u	10%, 63V , PETF	ANY
	C....30	59.06.0683	.068 u	10%, 63V , PETF	ANY
	C....31	59.06.0683	.068 u	10%, 63V , PETF	ANY
	C....32	59.06.0683	.068 u	10%, 63V , PETF	ANY
	C....33	59.06.0683	.068 u	10%, 63V , PETF	ANY
	C....34	59.06.0683	.068 u	10%, 63V , PETF	ANY
	C....35	59.06.0683	.068 u	10%, 63V , PETF	ANY
	C....37	59.06.0683	.068 u	10%, 63V , PETF	ANY
	C....38	59.06.0683	.068 u	10%, 63V , PETF	ANY

IND.	POS.NO.	PART NO.	VALUE	SPECIFICATIONS / EQUIVALENT	MANUF.
	C....39	59.06.0683	.068 u	10%, 63V , PETF	ANY
	C....40	59.06.0683	.068 u	10%, 63V , PETF	ANY
	C....41	59.06.0683	.068 u	10%, 63V , PETF	ANY
	C....42	59.06.0683	.068 u	10%, 63V , PETF	ANY
	C....43	59.06.0683	.068 u	10%, 63V , PETF	ANY
	C....44	59.06.0683	.068 u	10%, 63V , PETF	ANY
	C....45	59.06.0683	.068 u	10%, 63V , PETF	ANY
	C....46	59.06.0683	.068 u	10%, 63V , PETF	ANY
	C....47	59.06.0683	.068 u	10%, 63V , PETF	ANY
	C....48	59.06.0683	.068 u	10%, 63V , PETF	ANY
	C....49	59.06.0683	.068 u	10%, 63V , PETF	ANY
	C....50	59.06.0683	.068 u	10%, 63V , PETF	ANY
	C....51	59.06.0683	.068 u	10%, 63V , PETF	ANY
	C....52	59.06.0683	.068 u	10%, 63V , PETF	ANY
	C....53	59.06.0683	.068 u	10%, 63V , PETF	ANY
	C....54	59.06.0683	.068 u	10%, 63V , PETF	ANY
	C....55	59.06.0683	.068 u	10%, 63V , PETF	ANY
	C....56	59.06.0683	.068 u	10%, 63V , PETF	ANY
	C....57	59.06.0683	.068 u	10%, 63V , PETF	ANY
	C....58	59.06.0683	.068 u	10%, 63V , PETF	ANY
	C....59	59.06.0683	.068 u	10%, 63V , PETF	ANY
	C....60	59.06.0683	.068 u	10%, 63V , PETF	ANY
	C....61	59.06.0683	.068 u	10%, 63V , PETF	ANY
	C....62	59.06.0683	.068 u	10%, 63V , PETF	ANY
	C....63	59.06.0683	.068 u	10%, 63V , PETF	ANY
	C....64	59.06.0683	.068 u	10%, 63V , PETF	ANY
	C....65	59.06.0683	.068 u	10%, 63V , PETF	ANY
	C....66	59.06.0683	.068 u	10%, 63V , PETF	ANY
	C....67	59.06.0683	.068 u	10%, 63V , PETF	ANY
	C....68	59.06.0683	.068 u	10%, 63V , PETF	ANY
	C....69	59.34.5471	470 p	5%,N1500 , CER	ANY
	C....70	59.06.0683	.068 u	10%, 63V , PETF	ANY
	C....71	59.06.0683	.068 u	10%, 63V , PETF	ANY
	C....72	59.06.0104	.1 u	10%, 63V , PETF	ANY
	C....73	59.06.0104	.1 u	10%, 63V , PETF	ANY
	C....74	59.06.0683	.068 u	10%, 63V , PETF	ANY
	C....79	59.06.0683	.068 u	10%, 63V , PETF	ANY

IND.	POS.NO.	PART NO.	VALUE	SPECIFICATIONS / EQUIVALENT	MANUF.
	C....80	59.06.0683	.068 u	10%, 63V , PETF	ANY
	C....81	59.06.0474	.47 u	10%, 63V , PETF	ANY
	C....82	59.06.0104	.1 u	10%, 63V , PETF	ANY
	C....83	59.06.0104	.1 u	10%, 63V , PETF	ANY
	C....84	59.06.0104	.1 u	10%, 63V , PETF	ANY
	C....85	59.06.0104	.1 u	10%, 63V , PETF	ANY
	C....86	59.06.0104	.1 u	10%, 63V , PETF	ANY
	C....87	59.06.0104	.1 u	10%, 63V , PETF	ANY
	C....88	59.06.0104	.1 u	10%, 63V , PETF	ANY
	C....89	59.06.0104	.1 u	10%, 63V , PETF	ANY
	C....90	59.06.0103	.01 u	10%, 63V , PETF	ANY
	C....91	59.06.0474	.47 u	10%, 63V , PETF	ANY
	C....92	59.06.0104	.1 u	10%, 63V , PETF	ANY
	C....93	59.06.0333	.033 u	10%, 63V , PETF	ANY
	C....94	59.06.0104	.1 u	10%, 63V , PETF	ANY
	C....95	59.06.0683	.068 u	10%, 63V , PETF	ANY
	C....96	59.06.0104	.1 u	10%, 63V , PETF	ANY
	C....97	59.06.0334	.33 u	10%, 63V , PETF	ANY
	C....99	59.06.0474	.47 u	10%, 63V , PETF	ANY
	C....100	59.06.0105	1 u	10%, 63V , PETF	ANY
	C....101	59.06.0683	.068 u	10%, 63V , PETF	ANY
	C....102	59.06.0683	.068 u	10%, 63V , PETF	ANY
	C....103	59.06.0683	.068 u	10%, 63V , PETF	ANY
	C....104	59.06.0683	.068 u	10%, 63V , PETF	ANY
	C....105	59.06.0683	.068 u	10%, 63V , PETF	ANY
	C....106	59.06.0683	.068 u	10%, 63V , PETF	ANY
	C....107	59.06.0683	.068 u	10%, 63V , PETF	ANY
	C....108	59.06.0104	.1 u	10%, 63V , PETF	ANY
	C....109	59.06.0224	.22 u	10%, 63V , PETF	ANY
	C....110	59.06.0104	.1 u	10%, 63V , PETF	ANY
	C....112	59.06.0104	.1 u	10%, 63V , PETF	ANY
	C....113	59.05.2101	100 p	2.5%, 630V , PP	ANY
	D....1	50.04.0139		BB 112 MVAN 109, MV 1404	ANY
	D....2	50.04.0125		1N 4448 SI	ANY
	DL....1	50.04.2132		TLUG 2401 GR MATT	ANY

IND.	POS.NO.	PART NO.	VALUE	SPECIFICATIONS / EQUIVALENT	MANUF.
	F....1	51.99.0133		MINIFUSE 7A	ANY
	IC....1	50.17.7574		.. 74 ACT 574 .	ANY
	IC....2	50.06.0245		SN 74 LS 245 N	ANY
	IC....3	50.06.0245		SN 74 LS 245 N	ANY
	IC....4	50.18.0100		16 V 8 - 25 LP (SW 1.862.875.20)	ANY
	IC....5	50.14.0114		TBP 28L 22N (SW 1.862.860.21)	ANY
	IC....6	50.17.7574		.. 74 ACT 574 .	ANY
	IC....7	50.17.7244		.. 74 ACT 244 .	ANY
	IC....8	50.15.0123		SN 75 ALS 192 N	ANY
	IC....9	50.17.7074		.. 74 ACT 74 .	ANY
	IC....10	50.06.0595		SN 74 LS 595 N	ANY
	IC....11	50.06.0595		SN 74 LS 595 N	ANY
	IC....12	50.17.7574		.. 74 ACT 574 .	ANY
	IC....13	50.17.7574		.. 74 ACT 574 .	ANY
	IC....14	50.06.0597		SN 74 LS 597 N	ANY
	IC....15	50.06.0597		SN 74 LS 597 N	ANY
	IC....16	50.18.0100		16 V 8 - 25 LP (SW 1.862.859.20)	ANY
	IC....17	50.18.0100		16 V 8 - 25 LP (SW 1.862.858.20)	ANY
	IC....18	50.50.0010		PORTMASTER	St
	IC....19	50.50.0010		PORTMASTER	St
	IC....20	50.17.7574		.. 74 ACT 574 .	ANY
	IC....21	50.14.0127		CY 7 C 122 - 35 PC	ANY
	IC....22	50.14.0127		CY 7 C 122 - 35 PC	ANY
	IC....23	50.14.0127		CY 7 C 122 - 35 PC	ANY
	IC....24	50.14.0127		CY 7 C 122 - 35 PC	ANY
	IC....25	50.14.0127		CY 7 C 122 - 35 PC	ANY
	IC....26	50.14.0127		CY 7 C 122 - 35 PC	ANY
	IC....27	50.21.0244		.. 74 F 244 .	ANY
	IC....28	50.06.0165		SN 74 LS 165 N	ANY
	IC....29	50.06.0595		SN 74 LS 595 N	ANY
	IC....30	50.15.0109		AM26 LS33 PC/DS26 LS33 CN	ANY
	IC....32	50.14.0127		CY 7 C 122 - 35 PC	ANY
	IC....33	50.14.0127		CY 7 C 122 - 35 PC	ANY
	IC....34	50.17.0874		.. 74 HCT574 ./	ANY
	IC....35	50.17.0574		.. 74 HCT574 ./	ANY
	IC....36	50.06.0595		SN 74 LS 595 N	ANY

IND.	POS.NO.	PART NO.	VALUE	SPECIFICATIONS / EQUIVALENT	MANUF.
	IC...37	50.06.0113		SN 74 LS 113 N	ANY
	IC...38	50.17.1594		SN 74 HC 594 N	ANY
	IC...39	50.06.0151		SN 74 LS 151 N	ANY
	IC...40	50.17.7163		.. 74 ACT 163 .	ANY
	IC...41	50.17.7163		.. 74 ACT 163 .	ANY
	IC...42	50.14.0127		CY 7 C 122 - 35 PC	ANY
	IC...43	50.17.7574		.. 74 ACT 574 .	ANY
	IC...44	50.17.7244		.. 74 ACT 244 .	ANY
	IC...45	50.14.0150		CY 7 C 281 - 45 PC (SW 1.862.869.20)	ANY
	IC...46	50.14.0114		TBP 28L 22N (SW 1.862.868.20)	ANY
	IC...47	50.06.0595		SN 74 LS 595 N	ANY
	IC...48	50.18.0100		16 V 8 - 25 LP (SW 1.862.865.20)	ANY
	IC...49	50.18.0101		20 V 8 - 25 LP (SW 1.862.866.20)	ANY
	IC...50	50.18.0100		16 V 8 - 25 LP (SW 1.862.857.20)	ANY
	IC...51	50.14.0150		CY 7 C 281 - 45 PC (SW 1.862.871.20)	ANY
	IC...52	50.14.0150		CY 7 C 281 - 45 PC (SW 1.862.873.20)	ANY
	IC...54	50.17.7157		SN 74 ACT 157 N	ANY
	IC...55	50.14.0114		TBP 28L 22N (SW 1.862.872.21)	ANY
	IC...56	50.18.0100		16 V 8 - 25 LP (SW 1.862.856.21)	ANY
	IC...57	50.14.0114		TBP 28L 22N (SW 1.862.870.21)	ANY
	IC...58	50.17.7244		.. 74 ACT 244 .	ANY
	IC...59	50.18.0100		16 V 8 - 25 LP (SW 1.862.864.20)	ANY
	IC...60	50.18.0101		20 V 8 - 25 LP (SW 1.862.867.20)	ANY
	IC...61	50.17.7574		.. 74 ACT 574 .	ANY
	IC...62	50.18.0100		16 V 8 - 25 LP (SW 1.862.874.20)	ANY
	IC...63	50.18.0100		16 V 8 - 25 LP (SW 1.862.855.20)	ANY
	IC...64	50.17.7157		SN 74 ACT 157 N	ANY
	IC...65	50.06.0595		SN 74 LS 595 N	ANY
	IC...66	50.17.7574		.. 74 ACT 574 .	ANY
	IC...72	50.06.0123		SN 74 LS 123 N	ANY
	IC...73	50.10.0108		LM 317 LZ	ANY
	IC...74	50.11.0115		NE 529 N	ANY
	IC...75	50.11.0112		MC 1648 P SP 1648 DG/	ANY
	IC...76	50.10.0108		LM 317 LZ	ANY
	IC...77	50.18.0100		16 V 8 - 25 LP (SW 1.862.862.20)	ANY
	IC...78	50.18.0100		16 V 8 - 25 LP (SW 1.862.863.20)	ANY
	IC...79	50.18.0100		16 V 8 - 25 LP (SW 1.862.861.20)	ANY

IND.	POS.NO.	PART NO.	VALUE	SPECIFICATIONS / EQUIVALENT	MANUF.
	IC...80	50.05.0149		MC 4044 L MC 4344 L/	ANY
	IC...82	50.09.0101		TL 072 CP	ANY
	IC...83	50.06.0074		SN 74 LS 74 N	ANY
	IC...85	50.10.0109		LM 337 LZ	ANY
	L....1	62.03.0030	110 uH	3 A, FILTER	ANY
	L....2	62.02.3689	6.8 uH	10%, RAD., RM 5	ANY
	MP....1	1.862.664.13		AES INTERFACE PCB	ST
	MP....2	1.862.664.01		NR.-ETIKETTE	St
	MP....3	1.010.130.51		TEXT-ETIK. 5x20 (F7.00A)	ST
	MP....4	1.101.001.20		TEXT-ETIK. 5x20 HARDWARE -20	St
	MP....5	43.01.0108		ESE-WARNSCHILD	ANY
	MP....6	28.99.0119		ROHRNIETE D 2.5+0.15+ 10	ANY
	MP....7	28.99.0119		ROHRNIETE D 2.5+0.15+ 10	ANY
	MP....8	28.99.0119		ROHRNIETE D 2.5+0.15+ 10	ANY
	MP....9	28.99.0119		ROHRNIETE D 2.5+0.15+ 10	ANY
	MP...10	1.861.725.03		ABSCHIRMWINKEL	St
	MP...11	1.862.664.02		LABEL "AIF"	St
	MP...12	1.862.650.05		AUSWERFERHEBEL	St
	MP...13	1.862.650.05		AUSWERFERHEBEL	St
	MP...14	1.862.650.06		AUSWERFERSTIFT	St
	MP...15	1.862.650.06		AUSWERFERSTIFT	St
	P....1	54.01.0358		LEISTE 3 * 32 EURO PRINT	ANY
	P....2	54.01.0358		LEISTE 3 * 32 EURO PRINT	ANY
	R....1	57.11.3102	1 k	1%, 0207 , MF	ANY
	R....2	57.11.3221	220	1%, 0207 , MF	ANY
	R....3	57.11.3271	270	1%, 0207 , MF	ANY
	R....4	57.11.3820	82	1%, 0207 , MF	ANY
	R....5	57.11.3222	2.2 k	1%, 0207 , MF	ANY
	R....6	57.11.3102	1 k	1%, 0207 , MF	ANY
	R....7	57.11.3102	1 k	1%, 0207 , MF	ANY
	R....8	57.11.3471	470	1% 0207 , MF	ANY
	R....9	57.11.3102	1 k	1%, 0207 , MF	ANY
	R....11	57.11.3102	1 k	1%, 0207 , MF	ANY

IND.	POS.NO.	PART NO.	VALUE	SPECIFICATIONS / EQUIVALENT	MANUF.
	R....12	57.11.3102	1 k	1%, 0207 , MF	ANY
	R....13	57.11.3682	6.8 K	1%, 0207 , MF	ANY
	R....14	57.11.3272	2.7 k	1%, 0207 , MF	ANY
	R....15	57.11.3104	100 k	1%, 0207 , MF	ANY
	R....16	57.11.3682	6.8 k	1%, 0207 , MF	ANY
	R....17	57.11.3682	6.8 K	1%, 0207 , MF	ANY
	R....18	57.11.3133	13 k	1%, 0207 , MF	ANY
	R....19	57.11.3122	1.2 k	1%, 0207 , MF	ANY
	R....20	57.11.3122	1.2 K	1%, 0207 , MF	ANY
	R....21	57.11.3102	1 k	1%, 0207 , MF	ANY
	R....22	57.11.3152	1.5 k	1%, 0207 , MF	ANY
	R....23	57.11.3102	1 k	1%, 0207 , MF	ANY
	R....24	57.11.3101	100	1%, 0207 , MF	ANY
	R....25	57.11.3101	100	1%, 0207 , MF	ANY
	R....26	57.11.3102	1 k	1%, 0207 , MF	ANY
	R....27	57.11.8106	10 M	5%, 0207 , MF	ANY
	R....28	57.11.3682	6.8 k	1%, 0207 , MF	ANY
	R....29	57.11.3912	9.1 k	1%, 0207 , MF	ANY
	R....30	57.11.3132	1.3 k	1%, 0207 , MF	ANY
	R....31	57.11.3271	270	1%, 0207 , MF	ANY
	T.....1	1.022.632.00		DI/DO TRANSFORMER	St
	T.....2	1.022.632.00		DI/DO TRANSFORMER	St
	TP....1	54.02.0320		TESTPOINT **** QTY 19 **********	ANY
(01)	W.....1	1.010.119.64	190 MM	WIRE WRAP DRAHT	ST
	XIC...4	53.03.0165		DIL 20-POL, LOET	ANY
	XIC...5	53.03.0165		DIL 20-POL, LOET	ANY
	XIC...16	53.03.0165		DIL 20-POL, LOET	ANY
	XIC.17	53.03.0165		DIL 20-POL, LOET	ANY
	XIC..18	53.03.0173		DIL 28-POL, LOET	ANY
	XIC..19	53.03.0173		DIL 28-POL, LOET	ANY
	XIC..21	53.03.0183		DIL 22-POL, LOET	ANY
	XIC..22	53.03.0183		DIL 22-POL, LOET	ANY
	XIC..23	53.03.0183		DIL 22-POL, LOET	ANY

IND.	POS.NO.	PART NO.	VALUE	SPECIFICATIONS / EQUIVALENT	MANUF.
	XIC..24	53.03.0183		DIL 22-POL, LOET	ANY
	XIC..25	53.03.0183		DIL 22-POL, LOET	ANY
	XIC..26	53.03.0183		DIL 22-POL, LOET	ANY
	XIC..32	53.03.0183		DIL 22-POL, LOET	ANY
	XIC..33	53.03.0183		DIL 22-POL, LOET	ANY
	XIC..38	53.03.0168		DIL 16-POL LOET	ANY
	XIC..42	53.03.0183		DIL 22-POL, LOET	ANY
	XIC..45	53.03.0182		DIL 24-POL, LOET	ANY
	XIC..46	53.03.0165		DIL 20-POL, LOET	ANY
	XIC..48	53.03.0165		DIL 20-POL, LOET	ANY
	XIC..49	53.03.0182		DIL 24-POL, LOET	ANY
	XIC..50	53.03.0165		DIL 20-POL, LOET	ANY
	XIC..51	53.03.0182		DIL 24-POL, LOET	ANY
	XIC..52	53.03.0182		DIL 24-POL, LOET	ANY
	XIC..55	53.03.0165		DIL 20-POL, LOET	ANY
	XIC..56	53.03.0165		DIL 20-POL, LOET	ANY
	XIC..57	53.03.0165		DIL 20-POL, LOET	ANY
	XIC..59	53.03.0165		DIL 20-POL, LOET	ANY
	XIC..60	53.03.0182		DIL 24-POL, LOET	ANY
	XIC..62	53.03.0165		DIL 20-POL, LOET	ANY
	XIC..63	53.03.0165		DIL 20-POL, LOET	ANY
	XIC..77	53.03.0165		DIL 20-POL, LOET	ANY
	XIC..78	53.03.0165		DIL 20-POL, LOET	ANY
	XIC..79	53.03.0165		DIL 20-POL, LOET	ANY
	Y.....1	89.01.0590		Y-OSC 18.4326 MHZ, SPEZ.	ANY

IND.	POS.NO.	PART NO.	VALUE	SPECIFICATIONS / EQUIVALENT	MANUF.

REMARKS:

AENDERUNGEN 01: PRINT-NR 1.862.664-12 MIT W1 ODER
PRINT-NR 1.862.664-13 OHNE W1 VERWENDEN
AENDERUNGEN 22: IC4 ERSETZT DURCH GAL (SW 1.862.875-20)
NEU XIC4
SW 1.862.872-20 IST NEU -21 (IC55)

MANUFACTURERS:
St = STUDER / Ph = PHILIPS / So = SONY

ABBREVIATIONS:
CER = CERAMIC / FILM = FILM TYPE / XF = CLAMP FOR FUSES /
XIC = IC SOCKET

ORIG 91/04/02 (01) 91/04/02

BLOCKDIAGRAM SOUND MEMORY

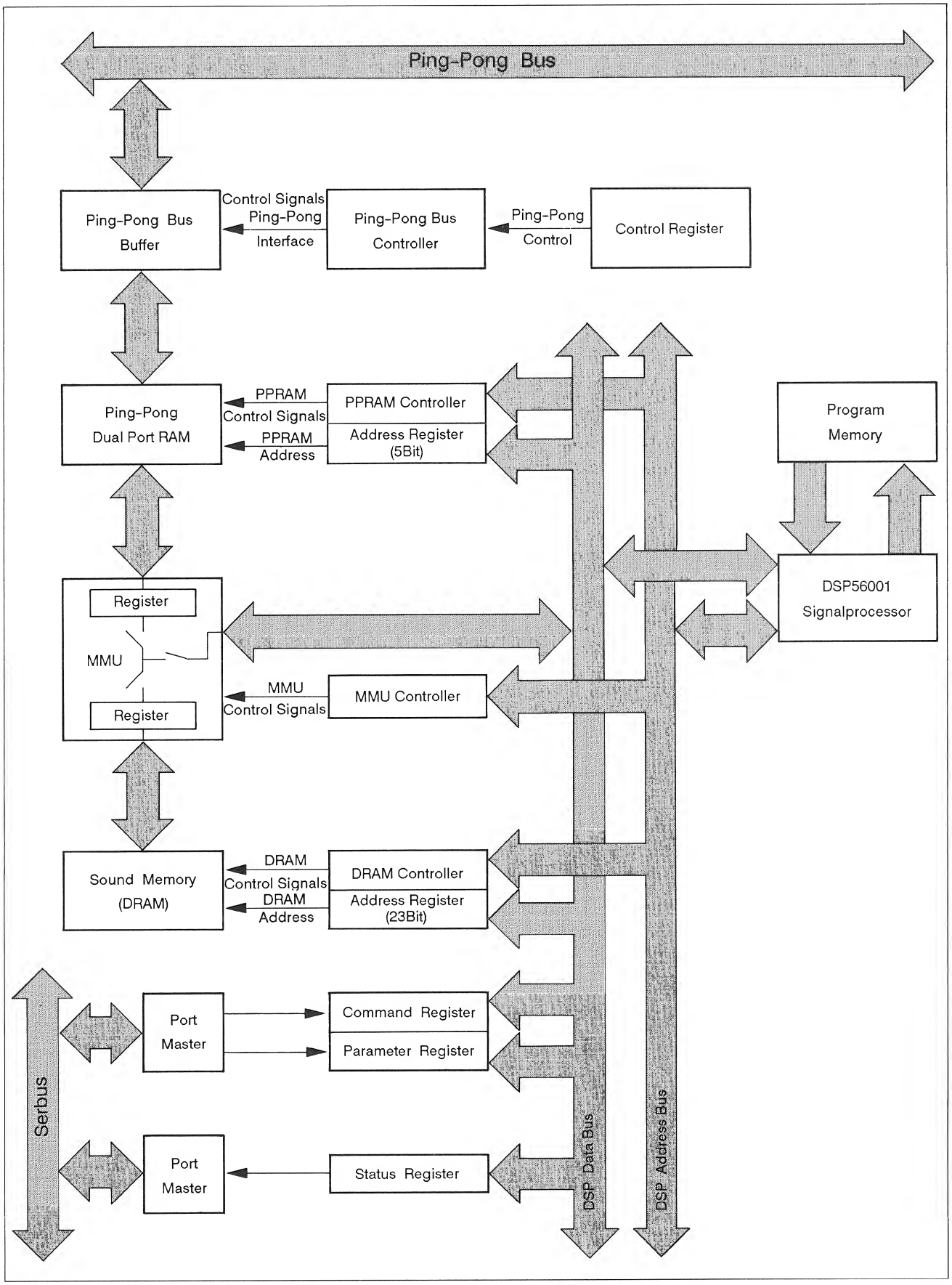

SOUND MEMORY 1.862.665.20

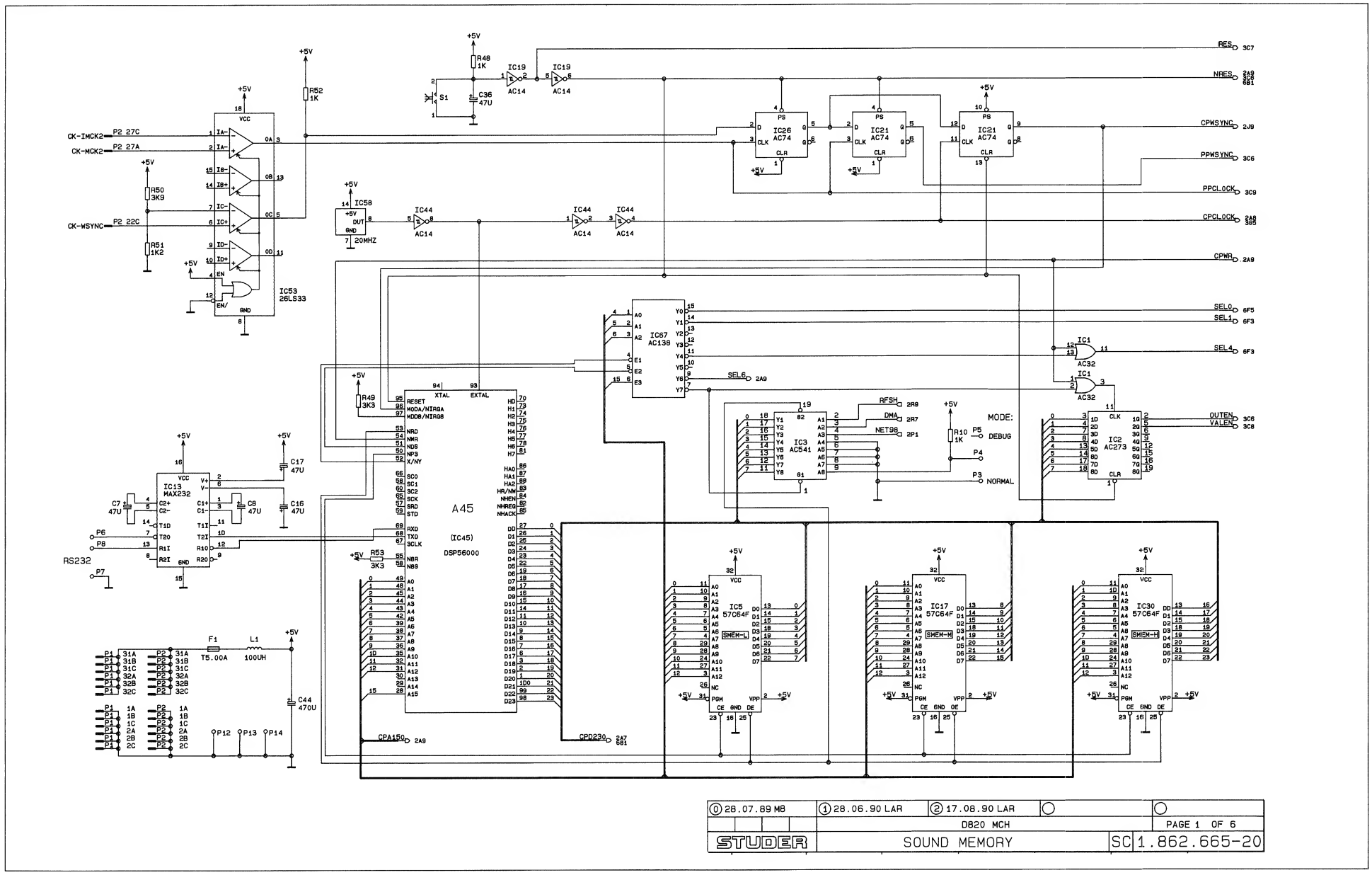

0 28.07.89 MB	1 28.06.90 LAR	2 17.08.90 LAR	
	D820 MCH		PAGE 1 OF 6
STUDER	SOUND MEMORY	SC	1.862.665-20

SOUND MEMORY 1.862.665.20

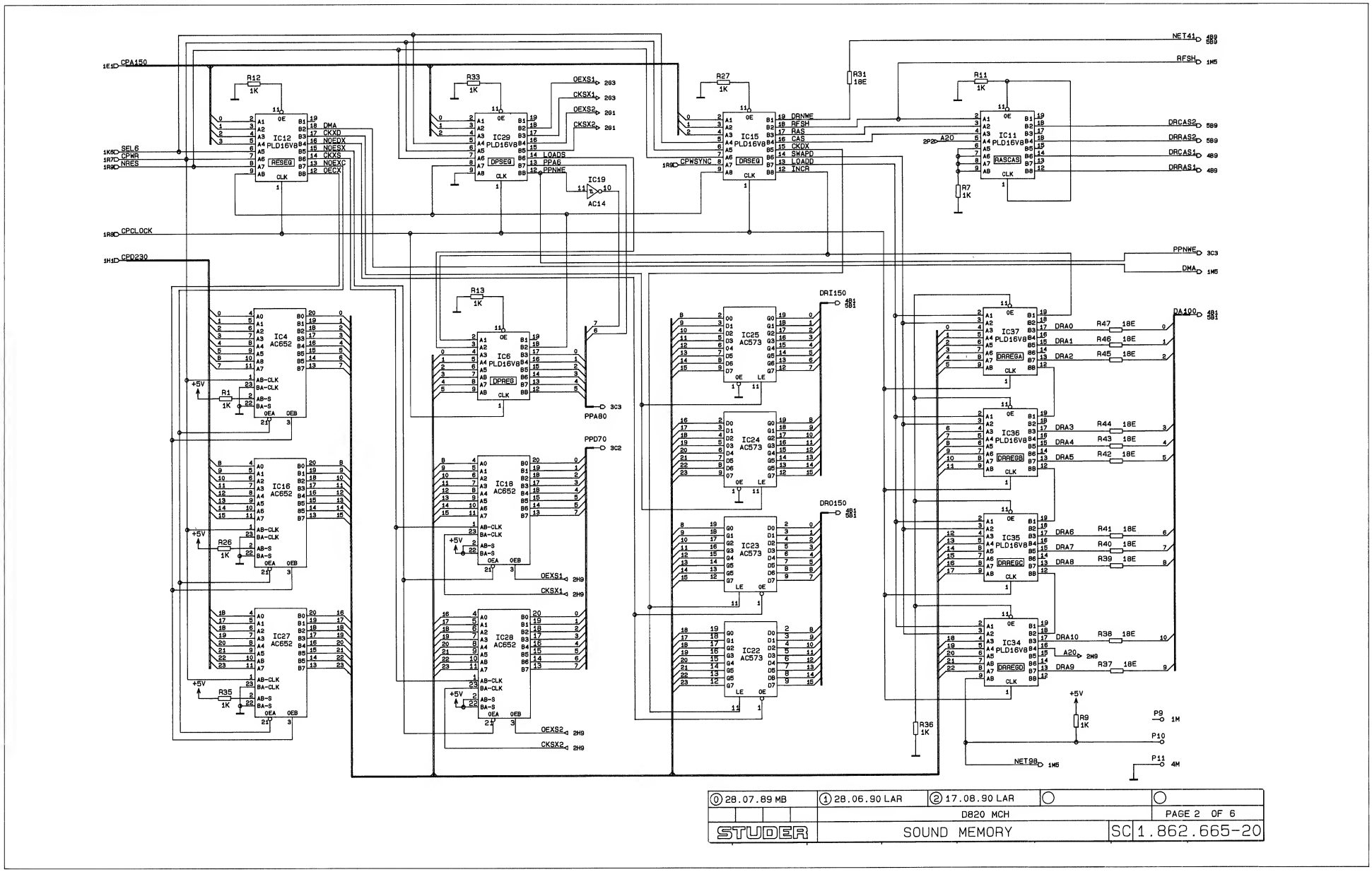

0 28.07.89 MB	1 28.06.90 LAR	2 17.08.90 LAR	
	D820 MCH		PAGE 2 OF 6
STUDER	SOUND MEMORY	SC	1.862.665-20

SOUND MEMORY 1.862.665.20

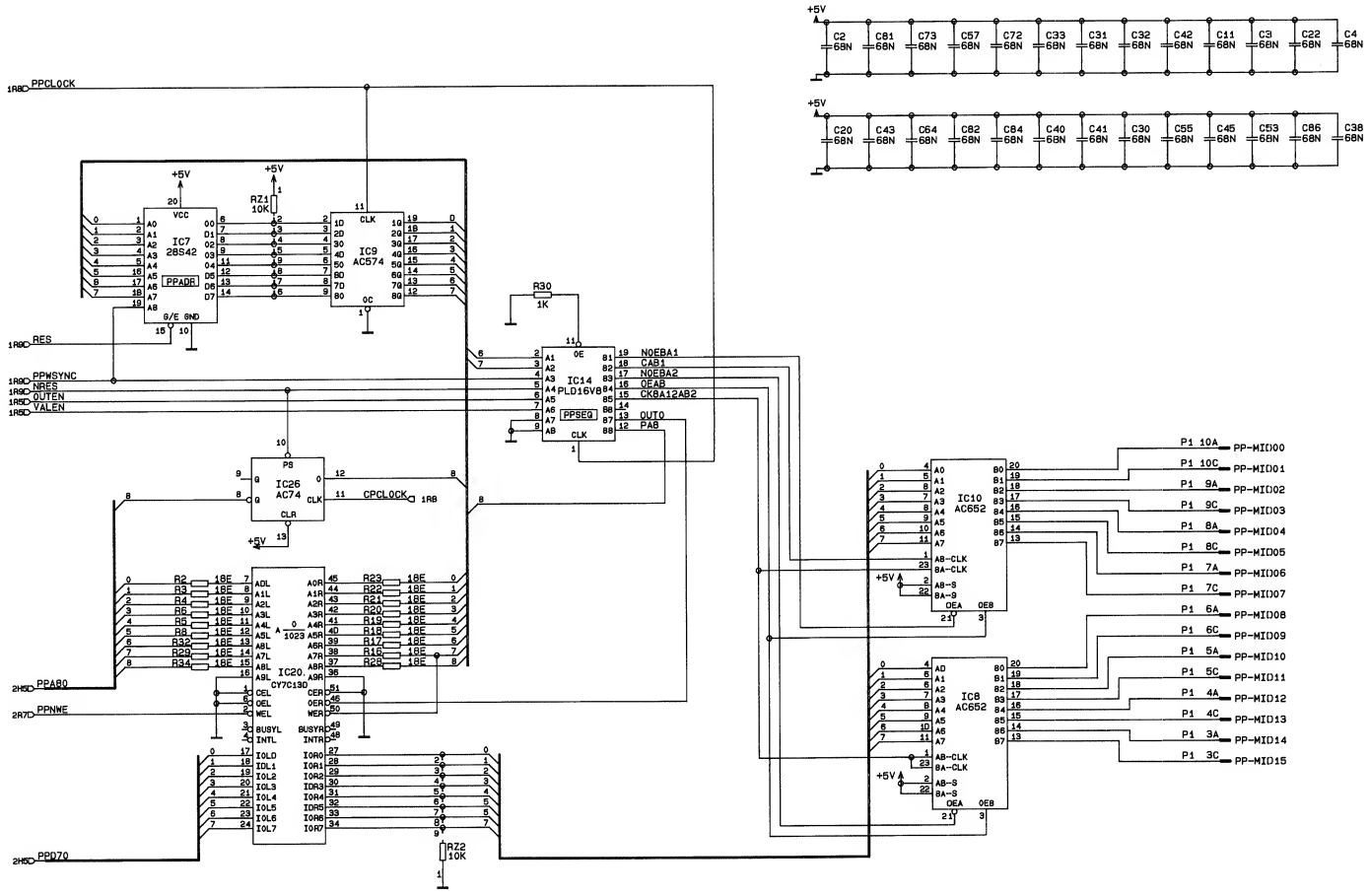

0 28.07.89 MB	1 28.06.90 LAR	2 17.08.90 LAR		
	D820 MCH			PAGE 3 OF 6
STUDER	SOUND MEMORY		SC	1.862.665-20

SOUND MEMORY 1.862.665.20

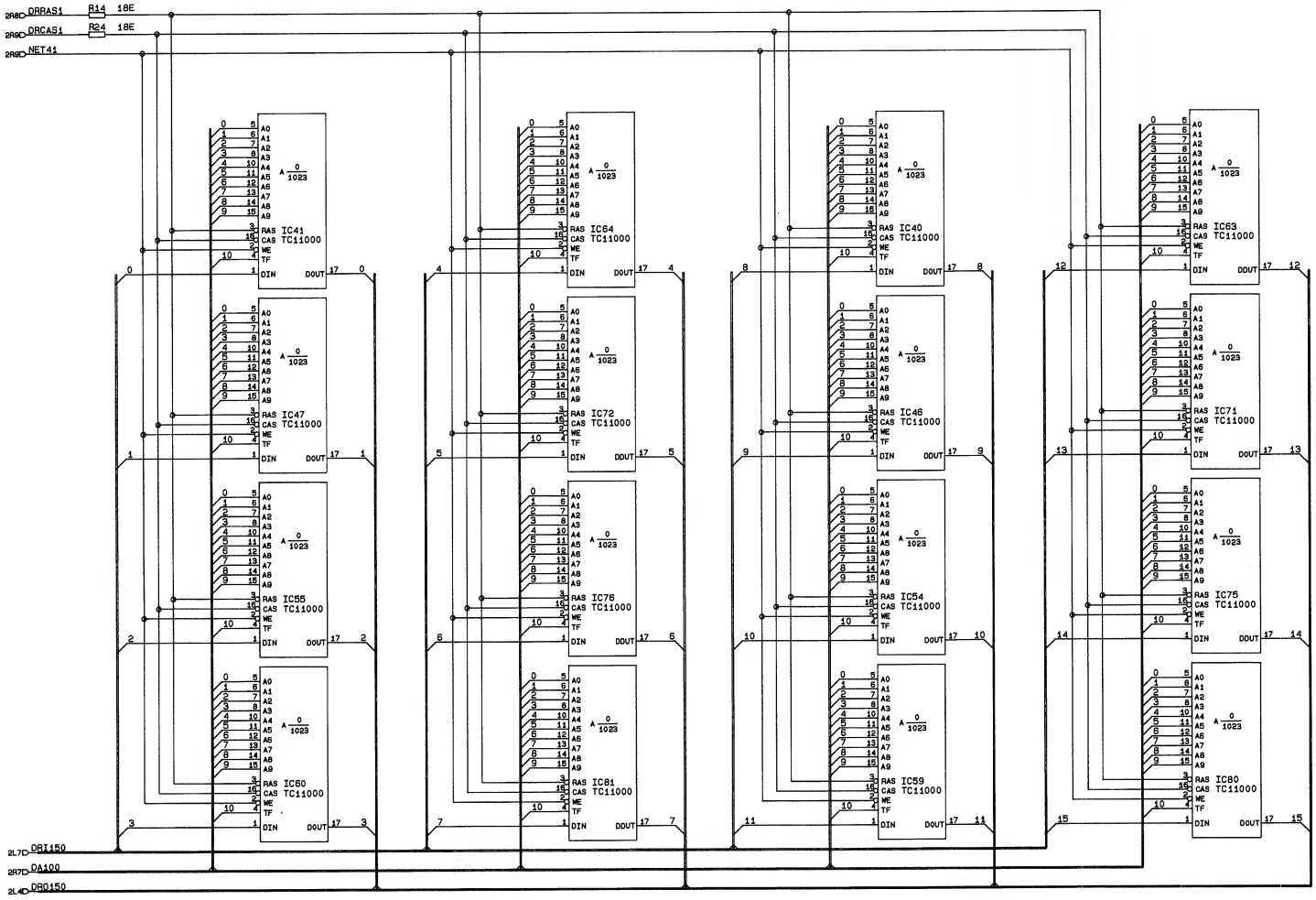

⓪ 28.07.89 MB	① 28.06.90 LAR	② 17.08.90 LAR	○
	D820 MCH		PAGE 4 OF 6
STUDER	SOUND MEMORY	SC	1.862.665-20

SOUND MEMORY 1.862.665.20

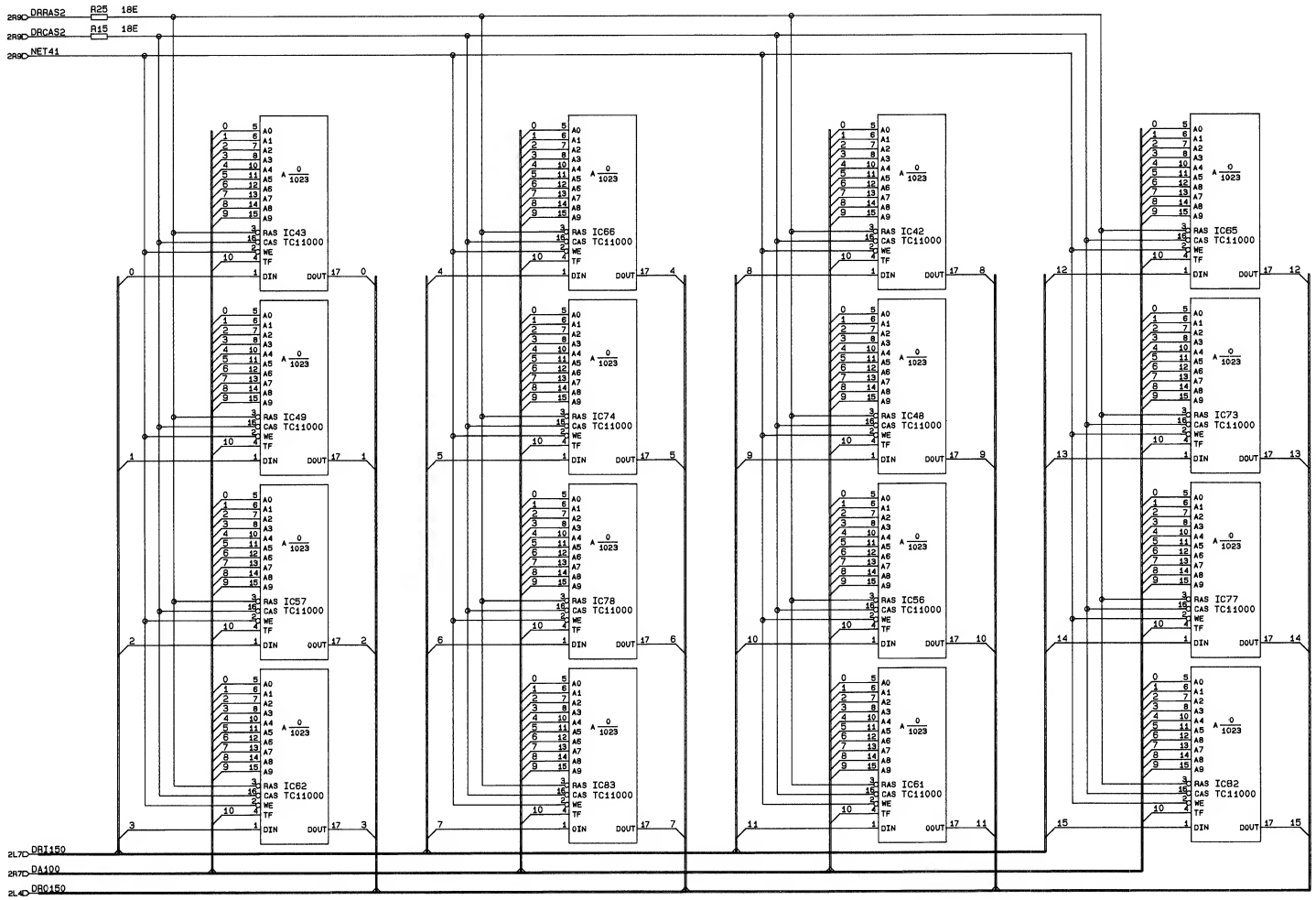

0 28.07.89 MB	1 28.06.90 LAR	2 17.08.90 LAR		
	D820 MCH			PAGE 5 OF 6
STUDER	SOUND MEMORY		SC	1.862.665-20

SOUND MEMORY 1.862.665.20

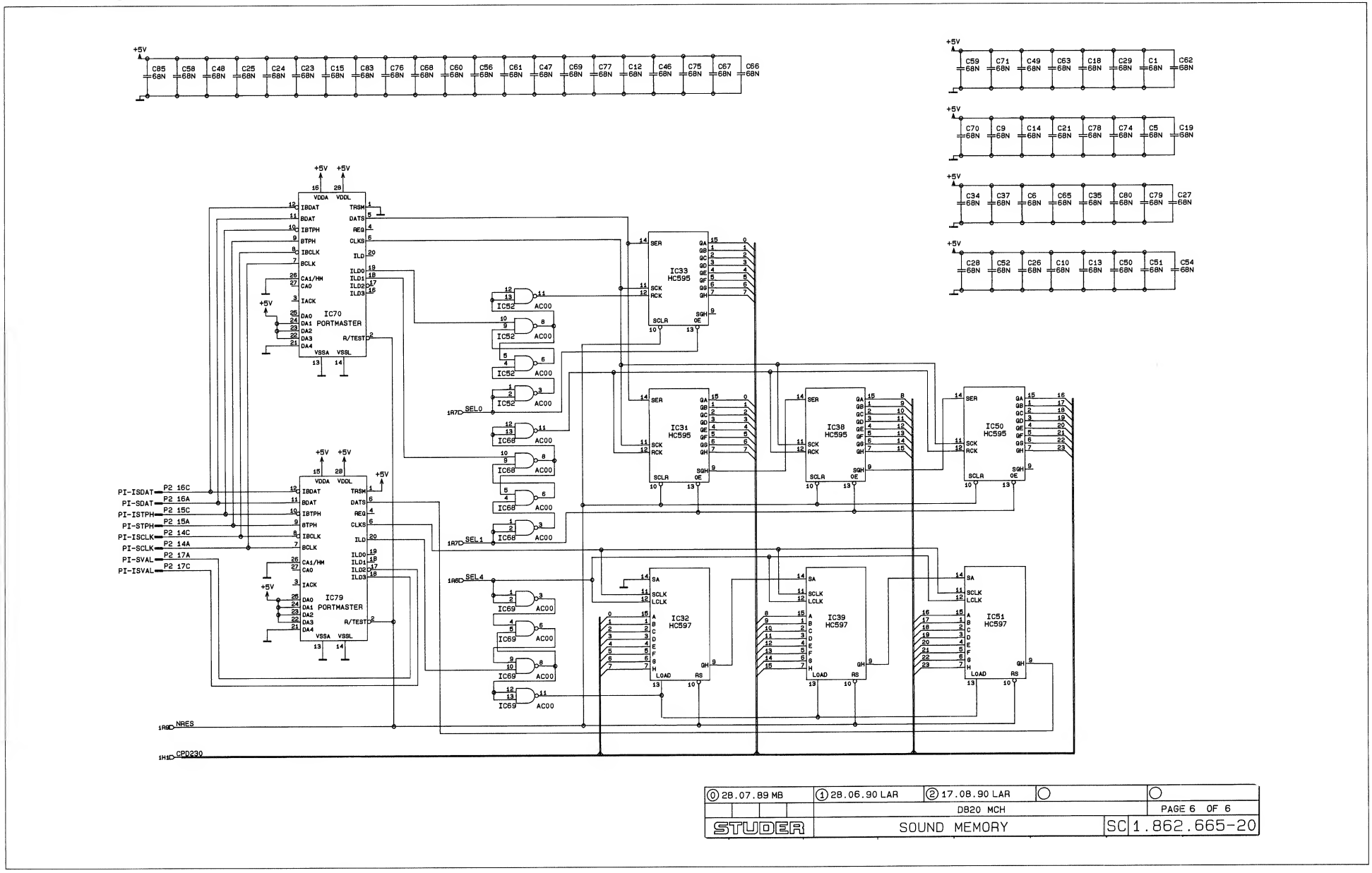

⓪ 28.07.89 MB	① 28.06.90 LAR	② 17.08.90 LAR	○
	D820 MCH		PAGE 6 OF 6
STUDER	SOUND MEMORY	SC	1.862.665-20

SOUND MEMORY 1.862.665.20

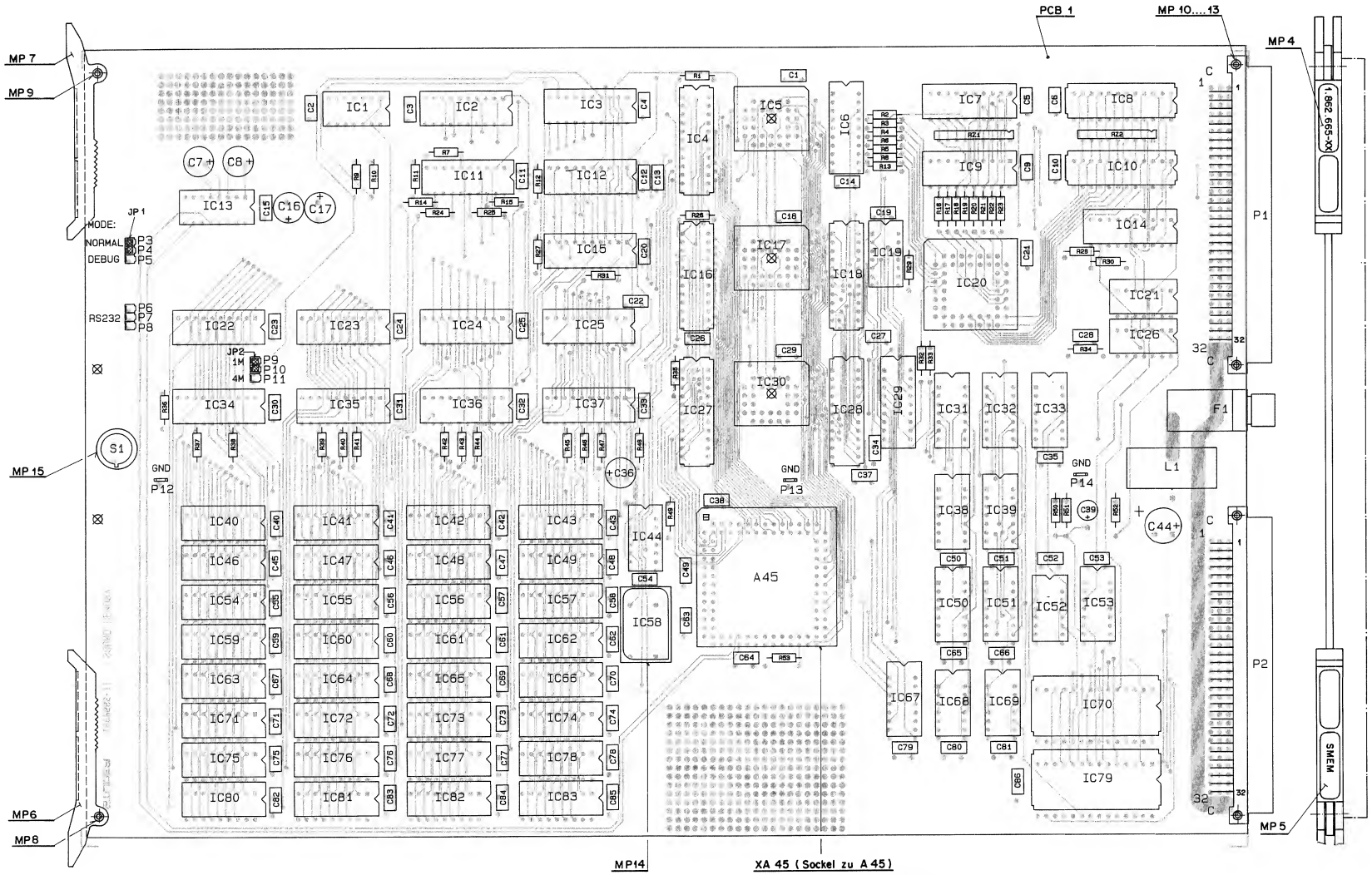

SOUND MEMORY 1.862.665.20

IND.	POS.NO.	PART NO.	VALUE	SPECIFICATIONS / EQUIVALENT	MANUF.
	A....45	1.920.211.00	DSP56000		
	C....1	59.06.0683	68n	63V, 10%, (59.06-2)	
	C....2	59.06.0683	68n	63V, 10%, (59.06-2)	
	C....3	59.06.0683	68n	63V, 10%, (59.06-2)	
	C....4	59.06.0683	68n	63V, 10%, (59.06-2)	
	C....5	59.06.0683	68n	63V, 10%, (59.06-2)	
	C....6	59.06.0683	68n	63V, 10%, (59.06-2)	
	C....7	59.22.4470	47n	16V, 20%, (59.22-A)	
	C....8	59.22.4470	47n	16V, 20%, (59.22-A)	
	C....9	59.06.0683	68n	63V, 10%, (59.06-2)	
	C....10	59.06.0683	68n	63V, 10%, (59.06-2)	
	C....11	59.06.0683	68n	63V, 10%, (59.06-2)	
	C....12	59.06.0683	68n	63V, 10%, (59.06-2)	
	C....13	59.06.0683	68n	63V, 10%, (59.06-2)	
	C....14	59.06.0683	68n	63V, 10%, (59.06-2)	
	C....15	59.06.0683	68n	63V, 10%, (59.06-2)	
	C....16	59.22.4470	47n	16V, 20%, (59.22-A)	
	C....17	59.22.4470	47n	16V, 20%, (59.22-A)	
	C....18	59.06.0683	68n	63V, 10%, (59.06-2)	
	C....19	59.06.0683	68n	63V, 10%, (59.06-2)	
	C....20	59.06.0683	68n	63V, 10%, (59.06-2)	
	C....21	59.06.0683	68n	63V, 10%, (59.06-2)	
	C....22	59.06.0683	68n	63V, 10%, (59.06-2)	
	C....23	59.06.0683	68n	63V, 10%, (59.06-2)	
	C....24	59.06.0683	68n	63V, 10%, (59.06-2)	
	C....25	59.06.0683	68n	63V, 10%, (59.06-2)	
	C....26	59.06.0683	68n	63V, 10%, (59.06-2)	
	C....27	59.06.0683	68n	63V, 10%, (59.06-2)	
	C....28	59.06.0683	68n	63V, 10%, (59.06-2)	
	C....29	59.06.0683	68n	63V, 10%, (59.06-2)	
	C....30	59.06.0683	68n	63V, 10%, (59.06-2)	
	C....31	59.06.0683	68n	63V, 10%, (59.06-2)	
	C....32	59.06.0683	68n	63V, 10%, (59.06-2)	
	C....33	59.06.0683	68n	63V, 10%, (59.06-2)	
	C....34	59.06.0683	68n	63V, 10%, (59.06-2)	
	C....35	59.06.0683	68n	63V, 10%, (59.06-2)	

S T U D E R (00) 90/09/03 LAR SOUND MEMORY , ESE PL 1.862.665.20 PAGE 1

IND.	POS.NO.	PART NO.	VALUE	SPECIFICATIONS / EQUIVALENT	MANUF.
	C....36	59.22.4470	47n	16V, 20%, (59.22-A)	
	C....37	59.06.0683	68n	63V, 10%, (59.06-2)	
	C....38	59.06.0683	68n	63V, 10%, (59.06-2)	
	C....39	59.22.6100	10u	35V,-20/+50%,(59.22-G)	
	C....40	59.06.0683	68n	63V, 10%, (59.06-2)	
	C....41	59.06.0683	68n	63V, 10%, (59.06-2)	
	C....42	59.06.0683	68n	63V, 10%, (59.06-2)	
	C....43	59.06.0683	68n	63V, 10%, (59.06-2)	
	C....44	59.22.4471	70n	16V, 20%, (59.22-E)	
	C....45	59.06.0683	68n	63V, 10%, (59.06-2)	
	C....46	59.06.0683	68n	63V, 10%, (59.06-2)	
	C....47	59.06.0683	68n	63V, 10%, (59.06-2)	
	C....48	59.06.0683	68n	63V, 10%, (59.06-2)	
	C....49	59.06.0683	68n	63V, 10%, (59.06-2)	
	C....50	59.06.0683	68n	63V, 10%, (59.06-2)	
	C....51	59.06.0683	68n	63V, 10%, (59.06-2)	
	C....52	59.06.0683	68n	63V, 10%, (59.06-2)	
	C....53	59.06.0683	68n	63V, 10%, (59.06-2)	
	C....54	59.06.0683	68n	63V, 10%, (59.06-2)	
	C....55	59.06.0683	68n	63V, 10%, (59.06-2)	
	C....56	59.06.0683	68n	63V, 10%, (59.06-2)	
	C....57	59.06.0683	68n	63V, 10%, (59.06-2)	
	C....58	59.06.0683	68n	63V, 10%, (59.06-2)	
	C....59	59.06.0683	68n	63V, 10%, (59.06-2)	
	C....60	59.06.0683	68n	63V, 10%, (59.06-2)	
	C....61	59.06.0683	68n	63V, 10%, (59.06-2)	
	C....62	59.06.0683	68n	63V, 10%, (59.06-2)	
	C....63	59.06.0683	68n	63V, 10%, (59.06-2)	
	C....64	59.06.0683	68n	63V, 10%, (59.06-2)	
	C....65	59.06.0683	68n	63V, 10%, (59.06-2)	
	C....66	59.06.0683	68n	63V, 10%, (59.06-2)	
	C....67	59.06.0683	68n	63V, 10%, (59.06-2)	
	C....68	59.06.0683	68n	63V, 10%, (59.06-2)	
	C....69	59.06.0683	68n	63V, 10%, (59.06-2)	
	C....70	59.06.0683	68n	63V, 10%, (59.06-2)	
	C....71	59.06.0683	68n	63V, 10%, (59.06-2)	
	C....72	59.06.0683	68n	63V, 10%, (59.06-2)	

S T U D E R (00) 90/09/03 LAR SOUND MEMORY , ESE PL 1.862.665.20 PAGE 2

IND.	POS.NO.	PART NO.	VALUE	SPECIFICATIONS / EQUIVALENT	MANUF.
	C....73	59.06.0683	68n	63V, 10%, (59.06-2)	
	C....74	59.06.0683	68n	63V, 10%, (59.06-2)	
	C....75	59.06.0683	68n	63V, 10%, (59.06-2)	
	C....76	59.06.0683	68n	63V, 10%, (59.06-2)	
	C....77	59.06.0683	68n	63V, 10%, (59.06-2)	
	C....78	59.06.0683	68n	63V, 10%, (59.06-2)	
	C....79	59.06.0683	68n	63V, 10%, (59.06-2)	
	C....80	59.06.0683	68n	63V, 10%, (59.06-2)	
	C....81	59.06.0683	68n	63V, 10%, (59.06-2)	
	C....82	59.06.0683	68n	63V, 10%, (59.06-2)	
	C....83	59.06.0683	68n	63V, 10%, (59.06-2)	
	C....84	59.06.0683	68n	63V, 10%, (59.06-2)	
	C....85	59.06.0683	68n	63V, 10%, (59.06-2)	
	C....86	59.06.0683	68n	63V, 10%, (59.06-2)	
	F....1	51.01.0124	FUSE	TS.0A 250V, S a 20	
	IC....1	50.17.5032	74AC32		
	IC....2	50.17.5273	74AC273		
	IC....3	50.17.5541	74AC541		
	IC....4	50.17.5652	74AC652		
	IC....5	50.63.1001	W557C64E	PLCC33 (SW 1.862.892-20)	
	IC....6	50.18.0100	16V8	(SW 1.862.890-20)	
	IC....7	50.14.0120	28542N	PROM 512*8 (SW 1.862.893-20)	
	IC....8	50.17.5652	74AC652		
	IC....9	50.17.5574	74AC574		
	IC....10	50.17.5652	74AC652		
	IC....11	50.18.0100	16V8	(SW 1.862.888-20)	
	IC....12	50.18.0100	16V8	(SW 1.862.889-20)	
	IC....13	50.15.0120	MAX232	TRANSM./RECEIVER RS232	
	IC....14	50.18.0100	16V8	(SW 1.862.887-20)	
	IC....15	50.18.0100	16V8	(SW 1.862.886-20)	
	IC....16	50.17.5652	74AC652		
	IC....17	50.63.1001	W557C64E	PLCC33 (SW 1.862.891-20)	
	IC....18	50.17.5652	74AC652		
	IC....19	50.17.5014	74AC14		
	IC....20	50.63.1702	CY7C130	PLCC52	

S T U D E R (00) 90/09/03 LAR SOUND MEMORY , ESE PL 1.862.665.20 PAGE 3

IND.	POS.NO.	PART NO.	VALUE	SPECIFICATIONS / EQUIVALENT	MANUF.
	IC....21	50.17.5074	74AC74		
	IC....22	50.17.5573	74AC573		
	IC....23	50.17.5573	74AC573		
	IC....24	50.17.5573	74AC573		
	IC....25	50.17.5573	74AC573		
	IC....26	50.17.5074	74AC74		
	IC....27	50.17.5652	74AC652		
	IC....28	50.17.5652	74AC652		
	IC....29	50.18.0100	16V8	(SW 1.862.881-20)	
	IC....30	50.63.1001	W557C64E	PLCC33 (SW 1.862.890-20)	
	IC....31	50.17.1595	74HC595		
	IC....32	50.17.1597	74HC597		
	IC....33	50.17.1595	74HC595		
	IC....34	50.18.0100	16V8	(SW 1.862.885-20)	
	IC....35	50.18.0100	16V8	(SW 1.862.884-20)	
	IC....36	50.18.0100	16V8	(SW 1.862.883-20)	
	IC....37	50.18.0100	16V8	(SW 1.862.882-20)	
	IC....38	50.17.1595	74HC595		
	IC....39	50.17.1597	74HC597		
	IC....40	50.14.1500	TC11000	1M*1 D-RAM	
	IC....41	50.14.1500	TC11000	1M*1 D-RAM	
	IC....42	50.14.1500	TC11000	1M*1 D-RAM	
	IC....43	50.14.1500	TC11000	1M*1 D-RAM	
	IC....44	50.17.5014	74AC14		
	IC....46	50.14.1500	TC11000	1M*1 D-RAM	
	IC....47	50.14.1500	TC11000	1M*1 D-RAM	
	IC....48	50.14.1500	TC11000	1M*1 D-RAM	
	IC....49	50.14.1500	TC11000	1M*1 D-RAM	
	IC....50	50.17.1595	74HC595		
	IC....51	50.17.1597	74HC597		
	IC....52	50.17.5000	74AC00		
	IC....53	50.15.0109	26LS33		
	IC....54	50.14.1500	TC11000	1M*1 D-RAM	
	IC....55	50.14.1500	TC11000	1M*1 D-RAM	
	IC....56	50.14.1500	TC11000	1M*1 D-RAM	
	IC....57	50.14.1500	TC11000	1M*1 D-RAM	
	IC....58	99.01.1805	20MHZ	CRYSTAL OSCILLATOR	

S T U D E R (00) 90/09/03 LAR SOUND MEMORY , ESE PL 1.862.665.20 PAGE 4

IND.	POS.NO.	PART NO.	VALUE	SPECIFICATIONS / EQUIVALENT	MANUF.
	IC....59	50.14.1500	TC11000	1M*1 D-RAM	
	IC....60	50.14.1500	TC11000	1M*1 D-RAM	
	IC....61	50.14.1500	TC11000	1M*1 D-RAM	
	IC....62	50.14.1500	TC11000	1M*1 D-RAM	
	IC....63	50.14.1500	TC11000	1M*1 D-RAM	
	IC....64	50.14.1500	TC11000	1M*1 D-RAM	
	IC....65	50.14.1500	TC11000	1M*1 D-RAM	
	IC....66	50.14.1500	TC11000	1M*1 D-RAM	
	IC....67	50.17.5138	74AC138		
	IC....68	50.17.5000	74AC00		
	IC....69	50.17.5000	74AC00		
	IC....70	50.50.0010		PORTMASTER	
	IC....71	50.14.1500	TC11000	1M*1 D-RAM	
	IC....72	50.14.1500	TC11000	1M*1 D-RAM	
	IC....73	50.14.1500	TC11000	1M*1 D-RAM	
	IC....74	50.14.1500	TC11000	1M*1 D-RAM	
	IC....75	50.14.1500	TC11000	1M*1 D-RAM	
	IC....76	50.14.1500	TC11000	1M*1 D-RAM	
	IC....77	50.14.1500	TC11000	1M*1 D-RAM	
	IC....78	50.14.1500	TC11000	1M*1 D-RAM	
	IC....79	50.50.0010		PORTMASTER	
	IC....80	50.14.1500	TC11000	1M*1 D-RAM	
	IC....81	50.14.1500	TC11000	1M*1 D-RAM	
	IC....82	50.14.1500	TC11000	1M*1 D-RAM	
	IC....83	50.14.1500	TC11000	1M*1 D-RAM	
	JP....1	54.01.0021	JUMPER	(ZU P3,P4)	
	JP....2	54.01.0021	JUMPER	(ZU P9,P10)	
	L.....1	62.03.0040	100UH	TOROID, 5A	
	MP....1	43.01.0108		ESE-WARNSCHILD	
	MP....2	1.010.122.51		ETIK. SICHERUNG	
	MP....3	1.101.001.20		ETIK. HARDWARE	
	MP....4	1.862.665.01		ETIK. BAUGRUPPE	
	MP....5	1.862.665.02		ETIK. LABEL	
	MP....6	1.862.650.05		AUSWERFERHEBEL	

S T U D E R (00) 90/09/03 LAR SOUND MEMORY , ESE PL 1.862.665.20 PAGE 5

IND.	POS.NO.	PART NO.	VALUE	SPECIFICATIONS / EQUIVALENT	MANUF.
	MP....7	1.862.650.05		AUSWERFERHEBEL	
	MP....8	1.862.650.06		AUSWERFERSTIFT	
	MP....9	1.862.650.06		AUSWERFERSTIFT	
	MP....10	28.99.0119		RIVETING NUT	
	MP....11	28.99.0119		RIVETING NUT	
	MP....12	28.99.0119		RIVETING NUT	
	MP....13	28.99.0119		RIVETING NUT	
	MP....14	1.010.003.89		ISOLIERSCH. QUARZ	
	MP....15	1.010.015.50		ISOLIERSCH. KEY	
	P.....1	54.01.0388		96P SOLDER-PINS	
	P.....2	54.01.0388		96P SOLDER-PINS	
	P.....3	54.11.0126		PIN-STRIP 1PIN SM	
	P.....4	54.11.0126		PIN-STRIP 1PIN SM	
	P.....5	54.11.0126		PIN-STRIP 1PIN SM	
	P.....6	54.11.0126		PIN-STRIP 1PIN SM	
	P.....7	54.11.0126		PIN-STRIP 1PIN SM	
	P.....8	54.11.0126		PIN-STRIP 1PIN SM	
	P.....9	54.11.0126		PIN-STRIP 1PIN SM	
	P.....10	54.11.0126		PIN-STRIP 1PIN SM	
	P.....11	54.11.0126		PIN-STRIP 1PIN SM	
	P.....12	54.02.0320		PLATPIN 2.8*0.8	
	P.....13	54.02.0320		PLATPIN 2.8*0.8	
	P.....14	54.02.0920		PLATPIN 2.8*0.8	
	PCB....1	1.862.665.11		Empty PCB	
	R.....1	57.11.3102	1k	MF, 1%	
	R.....2	57.11.3180	18E	MF, 1%	
	R.....3	57.11.3180	18E	MF, 1%	
	R.....4	57.11.3180	18E	MF, 1%	
	R.....5	57.11.3180	18E	MF, 1%	
	R.....6	57.11.3180	18E	MF, 1%	
	R.....7	57.11.3102	1k	MF, 1%	
	R.....8	57.11.3180	18E	MF, 1%	
	R.....9	57.11.3102	1k	MF, 1%	
	R....10	57.11.3102	1k	MF, 1%	

S T U D E R (00) 90/09/03 LAR SOUND MEMORY , ESE PL 1.862.665.20 PAGE 6

IND.	POS.NO.	PART NO.	VALUE	SPECIFICATIONS / EQUIVALENT	MANUF.
	R....11	57.11.3102	1k	MF, 1%	
	R....12	57.11.3102	1k	MF, 1%	
	R....13	57.11.3102	1k	MF, 1%	
	R....14	57.11.3180	18E	MF, 1%	
	R....15	57.11.3180	18E	MF, 1%	
	R....16	57.11.3180	18E	MF, 1%	
	R....17	57.11.3180	18E	MF, 1%	
	R....18	57.11.3180	18E	MF, 1%	
	R....19	57.11.3180	18E	MF, 1%	
	R....20	57.11.3180	18E	MF, 1%	
	R....21	57.11.3180	18E	MF, 1%	
	R....22	57.11.3180	18E	MF, 1%	
	R....23	57.11.3180	18E	MF, 1%	
	R....24	57.11.3180	18E	MF, 1%	
	R....25	57.11.3180	18E	MF, 1%	
	R....26	57.11.3102	1k	MF, 1%	
	R....27	57.11.3102	1k	MF, 1%	
	R....28	57.11.3180	18E	MF, 1%	
	R....29	57.11.3180	18E	MF, 1%	
	R....30	57.11.3102	1k	MF, 1%	
	R....31	57.11.3180	18E	MF, 1%	
	R....32	57.11.3180	18E	MF, 1%	
	R....33	57.11.3102	1k	MF, 1%	
	R....34	57.11.3180	18E	MF, 1%	
	R....35	57.11.3102	1k	MF, 1%	
	R....36	57.11.3102	1k	MF, 1%	
	R....37	57.11.3180	18E	MF, 1%	
	R....38	57.11.3180	18E	MF, 1%	
	R....39	57.11.3180	18E	MF, 1%	
	R....40	57.11.3180	18E	MF, 1%	
	R....41	57.11.3180	18E	MF, 1%	
	R....42	57.11.3180	18E	MF, 1%	
	R....43	57.11.3180	18E	MF, 1%	
	R....44	57.11.3180	18E	MF, 1%	
	R....45	57.11.3180	18E	MF, 1%	
	R....46	57.11.3180	18E	MF, 1%	
	R....47	57.11.3180	18E	MF, 1%	

S T U D E R (00) 90/09/03 LAR SOUND MEMORY , ESE PL 1.862.665.20 PAGE 7

IND.	POS.NO.	PART NO.	VALUE	SPECIFICATIONS / EQUIVALENT	MANUF.
	R....48	57.11.3102	1k	MF, 1%	
	R....49	57.11.3332	3k3	MF, 1%	
	R....50	57.11.3992	3k9	0.6W, 1%, 0207, MF	
	R....51	57.11.3122	1k2	0.6W, 1%, 0207, MF	
	R....52	57.11.3102	1k	MF, 1%	
	R....53	57.11.3332	3k3	MF, 1%	
	RZ....1	57.88.4103	8 * 10k	SIP09	
	RZ....2	57.88.4103	8 * 10k	SIP09	
	S.....1	55.03.0122		TOS	
	XA....45	53.03.0218		SIL *** GTY 100 ***	
	XF....1	53.03.0118		FUSE HOLDER	
	XIC...5	53.03.2232		PLCC33-SOCKET, 32-PIN	
	XIC...6	53.03.0165		DIL-SOCKET, 20-PIN	
	XIC...7	53.03.0165		DIL-SOCKET, 20-PIN	
	XIC...8	53.03.0182		DIL-SOCKET, 24-PIN	
	XIC..10	53.03.0182		DIL-SOCKET, 24-PIN	
	XIC..11	53.03.0165		DIL-SOCKET, 20-PIN	
	XIC..12	53.03.0165		DIL-SOCKET, 20-PIN	
	XIC..14	53.03.0165		DIL-SOCKET, 20-PIN	
	XIC..15	53.03.0165		DIL-SOCKET, 20-PIN	
	XIC..17	53.03.2232		PLCC33-SOCKET, 32-PIN	
	XIC..20	53.03.2282		PLCC52-SOCKET, 52-PIN	
	XIC..29	53.03.0165		DIL-SOCKET, 20-PIN	
	XIC..30	53.03.2232		PLCC33-SOCKET, 32-PIN	
	XIC..34	53.03.0165		DIL-SOCKET, 20-PIN	
	XIC..35	53.03.0165		DIL-SOCKET, 20-PIN	
	XIC..36	53.03.0165		DIL-SOCKET, 20-PIN	
	XIC..37	53.03.0165		DIL-SOCKET, 20-PIN	
	XIC..40	53.03.0175		DIL-SOCKET, 18-PIN	
	XIC..41	53.03.0175		DIL-SOCKET, 18-PIN	
	XIC..42	53.03.0175		DIL-SOCKET, 18-PIN	
	XIC..43	53.03.0175		DIL-SOCKET, 18-PIN	

S T U D E R (00) 90/09/03 LAR SOUND MEMORY , ESE PL 1.862.665.20 PAGE 8

IND.	POS.NO.	PART NO.	VALUE	SPECIFICATIONS / EQUIVALENT	MANUF.
	XIC..46	53.03.0175		DIL-SOCKET, 18-PIN	
	XIC..47	53.03.0175		DIL-SOCKET, 18-PIN	
	XIC..48	53.03.0175		DIL-SOCKET, 18-PIN	
	XIC..49	53.03.0175		DIL-SOCKET, 18-PIN	
	XIC..54	53.03.0175		DIL-SOCKET, 18-PIN	
	XIC..55	53.03.0175		DIL-SOCKET, 18-PIN	
	XIC..56	53.03.0175		DIL-SOCKET, 18-PIN	
	XIC..57	53.03.0175		DIL-SOCKET, 18-PIN	
	XIC..59	53.03.0175		DIL-SOCKET, 18-PIN	
	XIC..60	53.03.0175		DIL-SOCKET, 18-PIN	
	XIC..61	53.03.0175		DIL-SOCKET, 18-PIN	
	XIC..62	53.03.0175		DIL-SOCKET, 18-PIN	
	XIC..63	53.03.0175		DIL-SOCKET, 18-PIN	
	XIC..64	53.03.0175		DIL-SOCKET, 18-PIN	
	XIC..65	53.03.0175		DIL-SOCKET, 18-PIN	
	XIC..66	53.03.0175		DIL-SOCKET, 18-PIN	
	XIC..70	53.03.0173		DIL-SOCKET, 28-PIN	
	XIC..71	53.03.0175		DIL-SOCKET, 18-PIN	
	XIC..72	53.03.0175		DIL-SOCKET, 18-PIN	
	XIC..73	53.03.0175		DIL-SOCKET, 18-PIN	
	XIC..74	53.03.0175		DIL-SOCKET, 18-PIN	
	XIC..75	53.03.0175		DIL-SOCKET, 18-PIN	
	XIC..76	53.03.0175		DIL-SOCKET, 18-PIN	
	XIC..77	53.03.0175		DIL-SOCKET, 18-PIN	
	XIC..78	53.03.0175		DIL-SOCKET, 18-PIN	
	XIC..79	53.03.0173		DIL-SOCKET, 28-PIN	
	XIC..80	53.03.0175		DIL-SOCKET, 18-PIN	
	XIC..81	53.03.0175		DIL-SOCKET, 18-PIN	
	XIC..82	53.03.0175		DIL-SOCKET, 18-PIN	
	XIC..83	53.03.0175		DIL-SOCKET, 18-PIN	

S T U D E R (00) 90/09/03 LAR SOUND MEMORY , ESE PL 1.862.665.20 PAGE 9

IND.	POS.NO.	PART NO.	VALUE	SPECIFICATIONS / EQUIVALENT	MANUF.

REMARKS:

MANUFACTURERS:
St = STUDER / Ph = PHILIPS / So = SONY

ABBREVIATIONS:
CER = CERAMIC / FILM = FILM TYPE / XF = CLAMP FOR FUSES /
XIC = IC SOCKET

ORIG 90/09/03

S T U D E R (00) 90/09/03 LAR SOUND MEMORY , ESE PL 1.862.665.20 PAGE 10

BUS TERMINATION 1.862.670.00

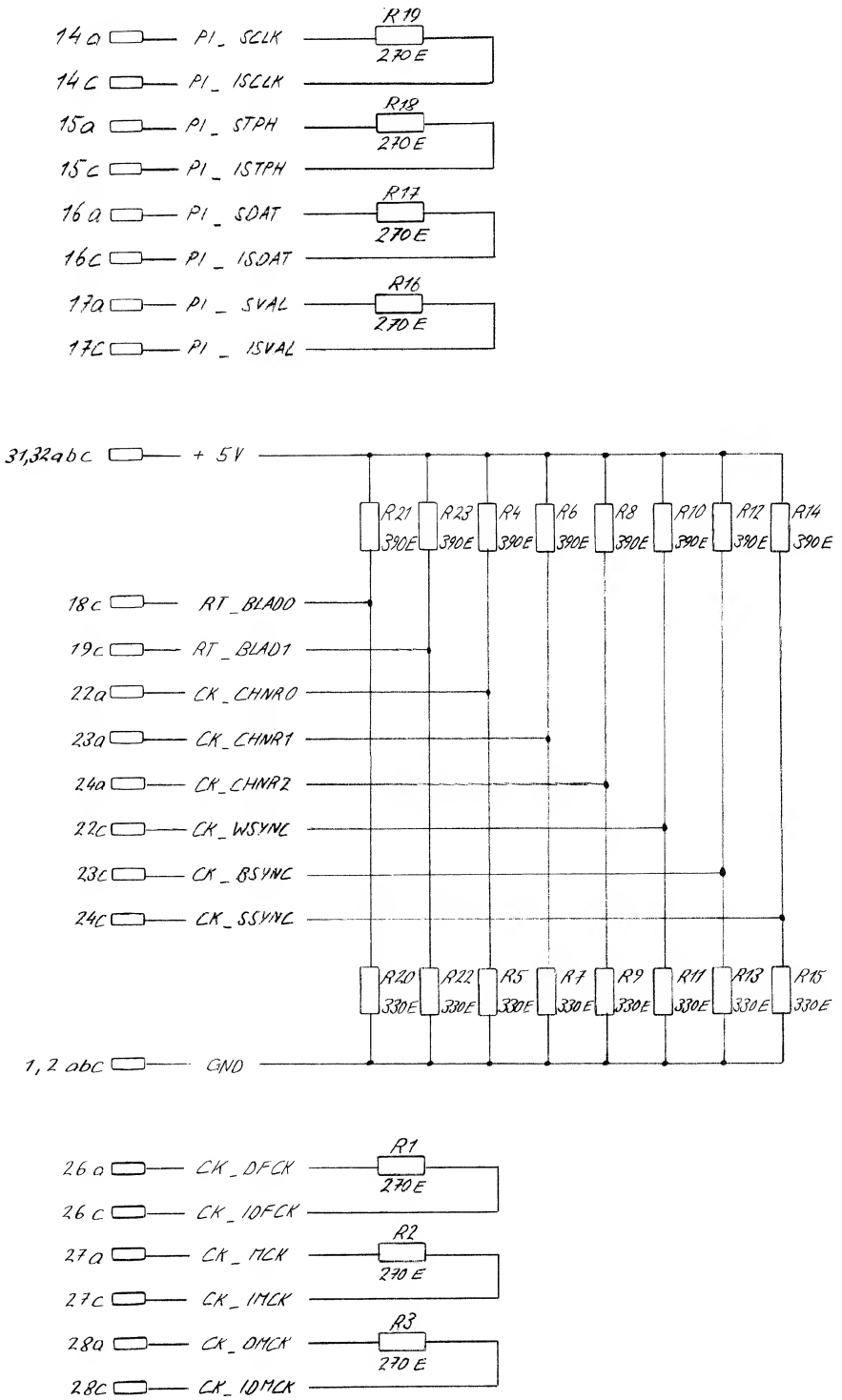

0 10.07.89 Bed	. .	. .	. .	. .
	D820 MCH BUS-TERMINATION			PAGE 1 OF 1
STUDER			SC	1.862.670-00

BUS TERMINATION 1.862.670.00

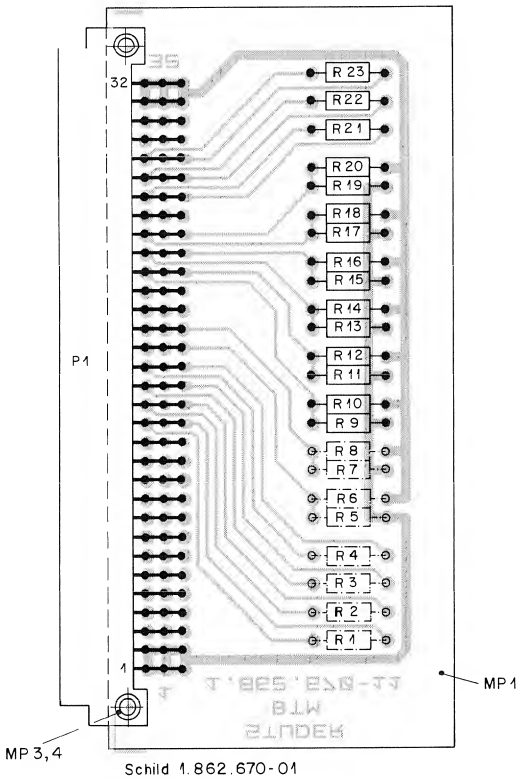

Schild 1.862.670-01
aufgeklebt nach Fabrikationsmuster.

IND.	POS.NO.	PART NO.	VALUE	SPECIFICATIONS / EQUIVALENT	MANUF.
	MP....1	1.862.670.11		BUS TERMINATOR PCB	St
	MP....2	1.862.670.01		NR.-ETIKETTE 5 * 20	St
	MP....3	28.99.0119		ROHRNIETE D 2.5*0.15* 10	ANY
	MP....4	28.99.0119		ROHRNIETE D 2.5*0.15* 10	ANY
	P.....1	54.01.0358		LEISTE 3 * 32 EURO PRINT	ANY
	R.....9	57.11.3331	330	1%, 0207 , MF	ANY
	R....10	57.11.3391	390	1%, 0207 , MF	ANY
	R....11	57.11.3331	330	1%, 0207 , MF	ANY
	R....12	57.11.3391	390	1%, 0207 , MF	ANY
	R....13	57.11.3331	330	1%, 0207 , MF	ANY
	R....14	57.11.3391	390	1%, 0207 , MF	ANY
	R....15	57.11.3331	330	1%, 0207 , MF	ANY
	R....16	57.11.3391	390	1%, 0207 , MF	ANY
	R....17	57.11.3331	330	1%, 0207 , MF	ANY
	R....18	57.11.3391	390	1%, 0207 , MF	ANY
	R....19	57.11.3331	330	1%, 0207 , MF	ANY
	R....20	57.11.3391	390	1%, 0207 , MF	ANY
	R....21	57.11.3271	270	1%, 0207 , MF	ANY
	R....22	57.11.3271	270	1%, 0207 , MF	ANY
	R....23	57.11.3271	270	1%, 0207 , MF	ANY

REMARKS: SERIEVERSION (R1....R8 je nach Bedarf fuer Extenderboard)
****

MANUFACTURERS:
St = STUDER, Ph = PHILIPS, BB = BURR BROWN, Ha = HARRIS

ABBREVIATIONS:
CER = CERAMIC / FILM = FILM TYPE / XF = CLAMP FOR FUSES /
XIC = IC SOCKET

ORIG 89/04/03

S T U D E R (00) 89/04/03 ZT BUS TERMINATION PL 1.862.670.00 PAGE 1

ANTI ALIASING FILTER 1.862.676.00

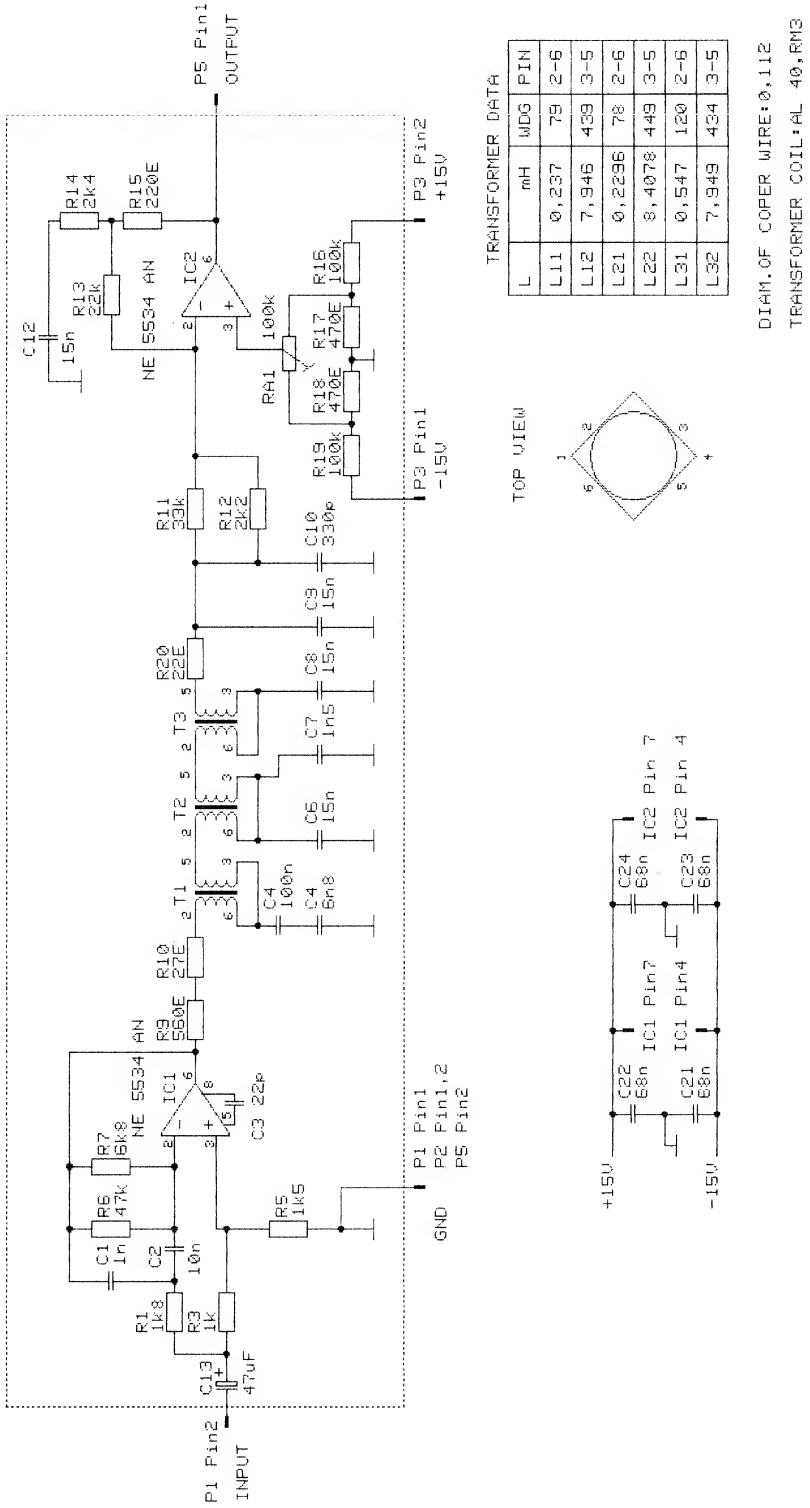

L	mH	WDG	PIN
L11	0,237	79	2-6
L12	7,946	439	3-5
L21	0,2296	78	2-6
L22	8,4078	449	3-5
L31	0,547	120	2-6
L32	7,949	434	3-5

⓪ 16.3.88 ER	① 4.9.90 RA		
	D820 MCH A/D CONVERTER		PAGE 1 OF 1
STUDER	AD BACKBAG (ANTI-ALIASING-FILTER)	SC	1.862.676.00

ANTI ALIASING FILTER 1.862.676.00

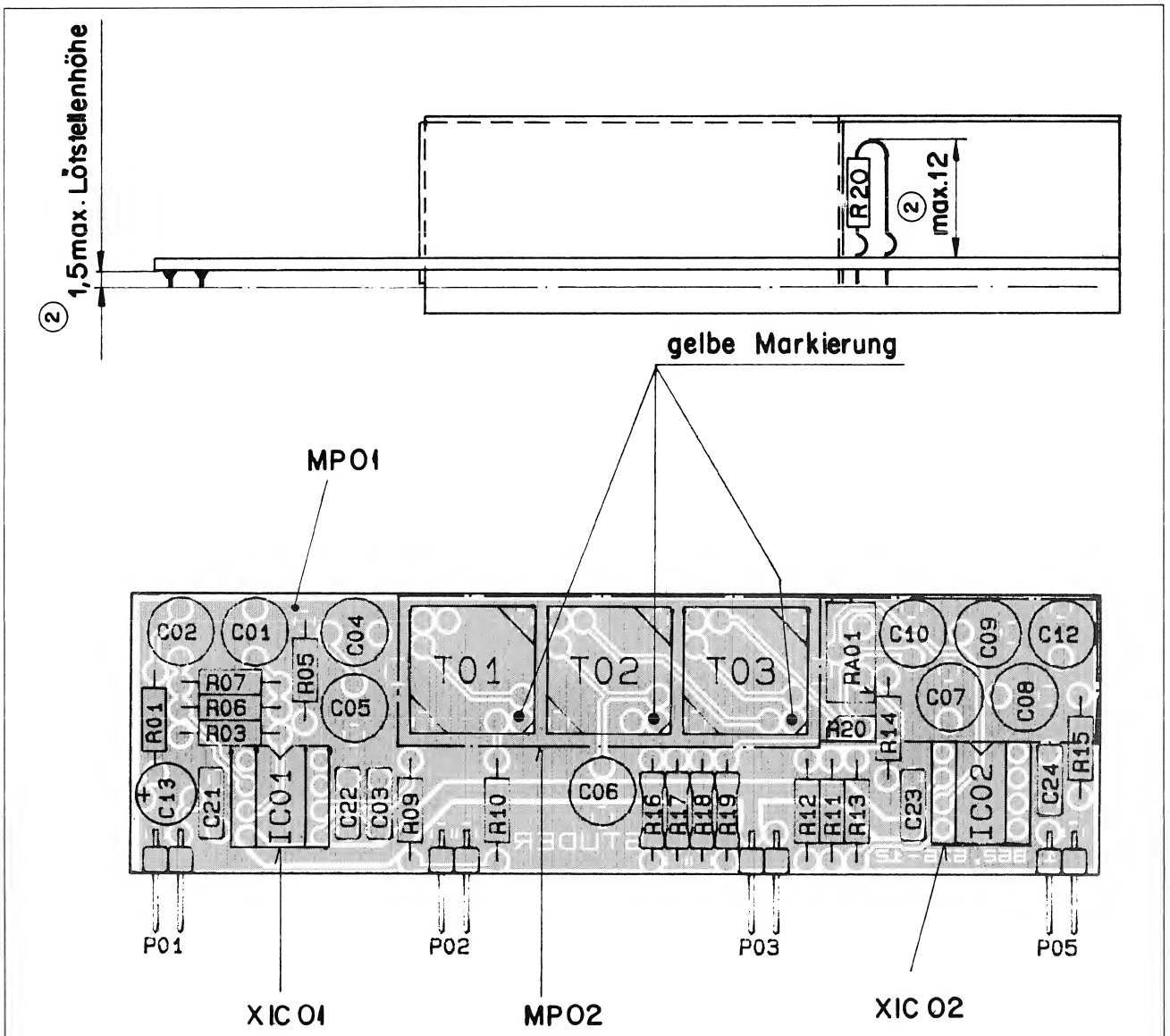

IND.	POS.NO.	PART NO.	VALUE	SPECIFICATIONS / EQUIVALENT	MANUF.
	RA....1	58.05.0104	100 k		ANY
	C.....1	59.05.1102	1 nF	1% , PP	ANY
	C.....2	59.05.1103	10 nF	1% , PP	ANY
	C.....3	59.99.0609	22 pF	10% , CER	ANY
	C.....4	59.06.5104	100 nF	5% , PP	ANY
	C.....5	59.05.1602	6.8 nF	1% , PP	ANY
	C.....6	59.99.1400	15 nF	1% , PP	ANY
	C.....7	59.05.1152	1.5 nF	1% , PP	ANY
	C....8	59.99.1400	15 nF	1% , PP	ANY
	C....9	59.99.1400	15 nF	1% , PP	ANY
	C....10	59.05.1331	330 pF	1% , PP	ANY
	C....12	59.99.1400	15 nF	1% , PP	ANY
	C....13	59.22.3470	47 uF	-20% +50% 10V EL	ANY
	C....21	59.06.0683	68 nF	10%, 63V , CER	ANY
	C....22	59.06.0683	68 nF	10%, 63V , CER	ANY
	C....23	59.06.0683	68 nF	10%, 63V , CER	ANY
	C....24	59.06.0683	68 nF	10%, 63V , CER	ANY
	IC....1	50.05.0244		NE 5534 SAN	ANY
	IC....2	50.05.0244		NE 5534 SAN	ANY
	MP....1	1.862.676.12		PCB	St
(00)	MP....2	1.862.676.02		SHIELD HOUSING FOR TRAFOS	St
(01)	MP....2	1.862.676.03		SHIELD HOUSING FOR TRAFOS	ST
	MP....3	1.862.676.01		LABEL	St
	P.....1	54.11.0132		SOLDERING PINS	ANY
	P.....2	54.11.0132		SOLDERING PINS	ANY
	P.....3	54.11.0132		SOLDERING PINS	ANY
	P.....4	54.11.0132		SOLDERING PINS	ANY
	P.....5	54.11.0132		SOLDERING PINS	ANY
	P.....6	54.11.0132		SOLDERING PINS	ANY
	P.....7	54.11.0132		SOLDERING PINS	ANY
	P.....8	54.11.0132		SOLDERING PINS	ANY
	R.....1	57.11.3182	1.8 k	1% , MF	ANY

S T U D E R (02) 89/10/24 RU A/D BACKBAG (ANTIALIASING) PL 1.862.676.00 PAGE 1

IND.	POS.NO.	PART NO.	VALUE	SPECIFICATIONS / EQUIVALENT	MANUF.
	R.....3	57.11.3102	1 k	1% , MF	ANY
	R.....5	57.11.3152	1.5 k	1% , MF	ANY
	R.....6	57.11.3473	47 k	1% , MF	ANY
	R.....7	57.11.3682	6.8 k	1% , MF	ANY
	R.....9	57.11.3561	560 E	1% , MF	ANY
	R....10	57.11.3270	27 E	1% , MF	ANY
	R....11	57.11.3333	33 k	1% , MF	ANY
	R....12	57.11.3222	2.2 k	1% , MF	ANY
	R....13	57.11.3223	22 k	1% , MF	ANY
(00)	R....14	57.11.3242	2.4 K	1% , MF	ANY
(02)	R....14	57.11.3332	3.3 K	1% , MF	ANY
	R....15	57.11.3221	220 E	1% , MF	ANY
	R....16	57.11.3104	100 k	1% , MF	ANY
	R....17	57.11.3471	470 E	1% , MF	ANY
	R....18	57.11.3471	470 E	1% , MF	ANY
	R....19	57.11.3104	100 k	1% , MF	ANY
	R....20	57.11.3220	22 E	1% , MF	ANY
	T.....1	1.022.620.00		0.237 mH / 7.95 mH , 1.2%	St
	T.....2	1.022.622.00		0.2296 mH / 8.408 mH, 1.2%	St
	T.....3	1.022.621.00		0.547 mH / 7.95 mH , 1.2%	St
	XIC...1	53.03.0166		DIL-SOCKET, 8-PIN	ANY
	XIC...2	53.03.0166		DIL-SOCKET, 8-PIN	ANY

REMARKS: SERIEVERSION FREIGABE:11.04.89
****

MANUFACTURERS:
St = STUDER

ABBREVIATIONS:
CER = CERAMIC / PP = POLY-PROPYLENE / PS = POLY-STYRENE

ORIG 89/04/03 (01) 89/12/07 (02) 89/10/24

S T U D E R (02) 89/10/24 RU A/D BACKBAG (ANTIALIASING) PL 1.862.676.00 PAGE 2

ANTI ALIASING FILTER 1.862.676.81

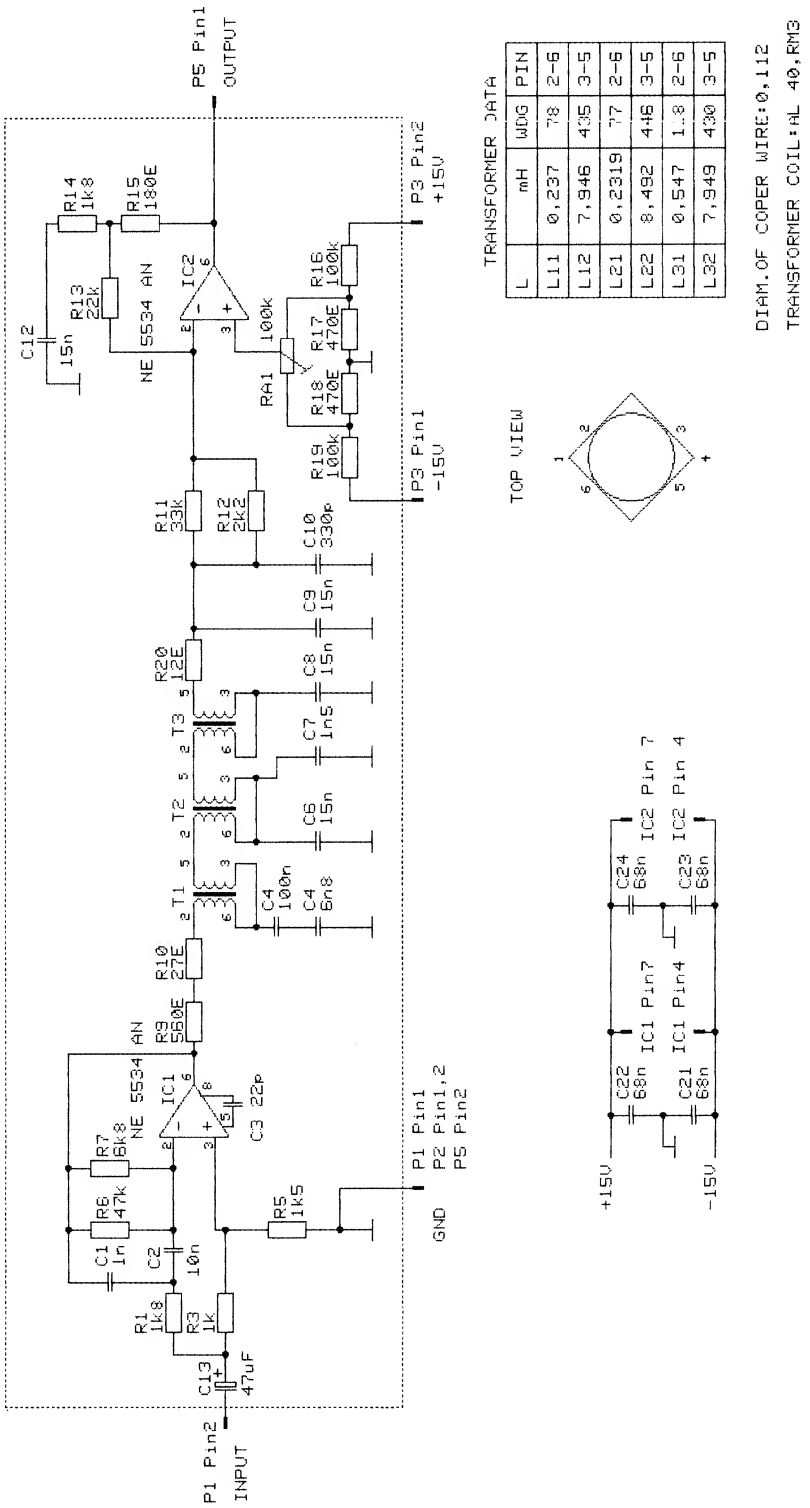

L	mH	WDG	PIN
L11	0,237	78	2-6
L12	7,946	435	3-5
L21	0,2319	77	2-6
L22	8,492	446	3-5
L31	0,547	1.8	2-6
L32	7,949	430	3-5

© 4.9.90 RA			
	D820 MCH A/D CONVERTER		PAGE 1 OF 1
STUDER	AD BACKBAG (ANTI-ALIASING-FILTER)	SC	1.862.676.81

ANTI ALIASING FILTER 1.862.676.81

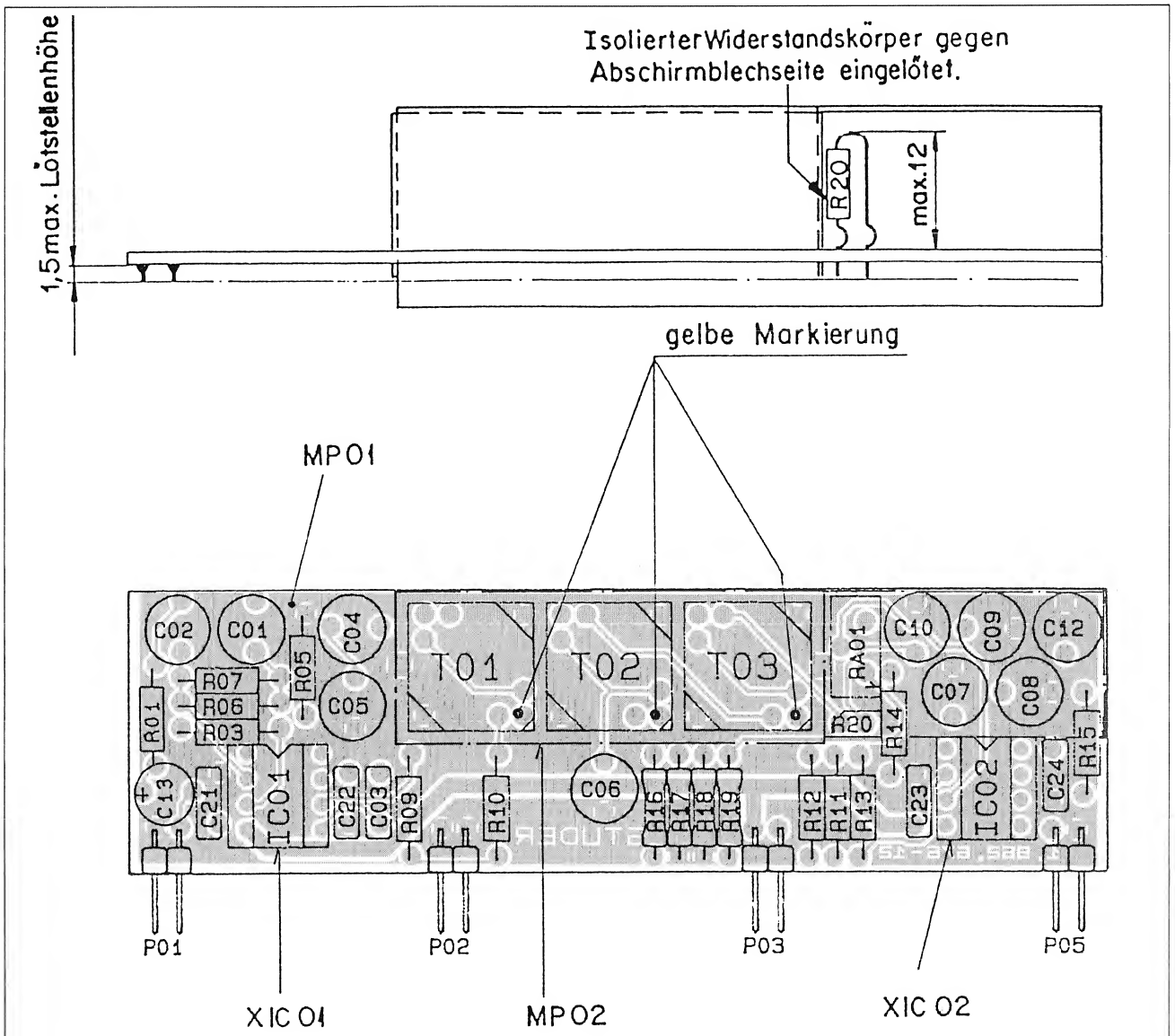

IND.	POS.NO.	PART NO.	VALUE	SPECIFICATIONS / EQUIVALENT	MANUF.
	RA....1	58.05.0104	100 k		ANY
	C.....1	59.05.1102	1 nF	1% , PP	ANY
	C.....2	59.05.1103	10 nF	1% , PP	ANY
	C.....3	59.99.0609	22 pF	10% , CER	ANY
	C.....4	59.06.5104	100 nF	5% , PP	ANY
	C.....5	59.05.1682	6.8 nF	1% , PP	ANY
	C.....6	59.99.1400	15 nF	1% , PP	ANY
	C.....7	59.05.1152	1.5 nF	1% , PP	ANY
	C.....8	59.99.1400	15 nF	1% , PP	ANY
	C.....9	59.99.1400	15 nF	1% , PP	ANY
	C....10	59.05.1331	330 pF	1% , PP	ANY
	C....12	59.99.1400	15 nF	1% , PP	ANY
	C....13	59.22.3470	47 uF	-20% +50% 10V EL	ANY
	C....21	59.06.0683	68 nF	10%, 63V , CER	ANY
	C....22	59.06.0683	68 nF	10%, 63V , CER	ANY
	C....23	59.06.0683	68 nF	10%, 63V , CER	ANY
	C....24	59.06.0683	68 nF	10%, 63V , CER	ANY
	IC....1	50.05.0244		NE 5534 SAN	ANY
	IC....2	50.05.0244		NE 5534 SAN	ANY
	MP....1	1.862.676.12		PCB	St
	MP....2	1.862.676.03		SHIELD HOUSING FOR TRAFOS	ST
	MP....3	1.862.676.01		LABEL	St
	P.....1	54.11.0132		SOLDERING PINS	ANY
	P.....2	54.11.0132		SOLDERING PINS	ANY
	P.....3	54.11.0132		SOLDERING PINS	ANY
	P.....4	54.11.0132		SOLDERING PINS	ANY
	P.....5	54.11.0132		SOLDERING PINS	ANY
	P.....6	54.11.0132		SOLDERING PINS	ANY
	P.....7	54.11.0132		SOLDERING PINS	ANY
	P.....8	54.11.0132		SOLDERING PINS	ANY
	R.....1	57.99.0257	1.8 k	0,1% , MF	ANY
	R.....3	57.99.0256	1 k	0,1% , MF	ANY

S T U D E R (00) 90/08/10 LAR A/D BACKBAG (ANTIALIASING) PL 1.862.676.81 PAGE 1

IND.	POS.NO.	PART NO.	VALUE	SPECIFICATIONS / EQUIVALENT	MANUF.
	R.....5	57.99.0253	1.5 k	0,1% , MF	ANY
	R.....6	57.11.3473	47 k	1% , MF	ANY
	R.....7	57.99.0250	6.8 k	0,1% , MF	ANY
	R.....9	57.99.0258	560 E	0,1% , MF	ANY
	R....10	57.11.3270	27 E	1% , MF	ANY
	R....11	57.11.3333	33 k	1% , MF	ANY
	R....12	57.11.3222	2.2 k	1% , MF	ANY
	R....13	57.11.3223	22 k	1% , MF	ANY
	R....14	57.99.0257	1.8 k	0,1% , MF	ANY
	R....15	57.11.3181	180 E	1% , MF	ANY
	R....16	57.11.3104	100 k	1% , MF	ANY
	R....17	57.11.3471	470 E	1% , MF	ANY
	R....18	57.11.3471	470 E	1% , MF	ANY
	R....19	57.11.3104	100 k	1% , MF	ANY
	R....20	57.11.3120	12 E	1% , MF	ANY
	T.....1	1.022.620.81		0.237 mH / 7.95 mH , 0.5%	St
	T.....2	1.022.622.81		0.2319 mH / 8.492 mH, 0.5%	St
	T.....3	1.022.621.81		0.547 mH / 7.95 mH , 0.5%	St
	XIC...1	53.03.0166		DIL-SOCKET, 8-PIN	ANY
	XIC...2	53.03.0166		DIL-SOCKET, 8-PIN	ANY

REMARKS:

MANUFACTURERS:
St = STUDER

ABBREVIATIONS:
CER = CERAMIC / PP = POLY-PROPYLENE / PS = POLY-STYRENE

ORIG 90/08/10

S T U D E R (00) 90/08/10 LAR A/D BACKBAG (ANTIALIASING) PL 1.862.676.81 PAGE 2

A/D INPUT MODULE 1.862.677.00

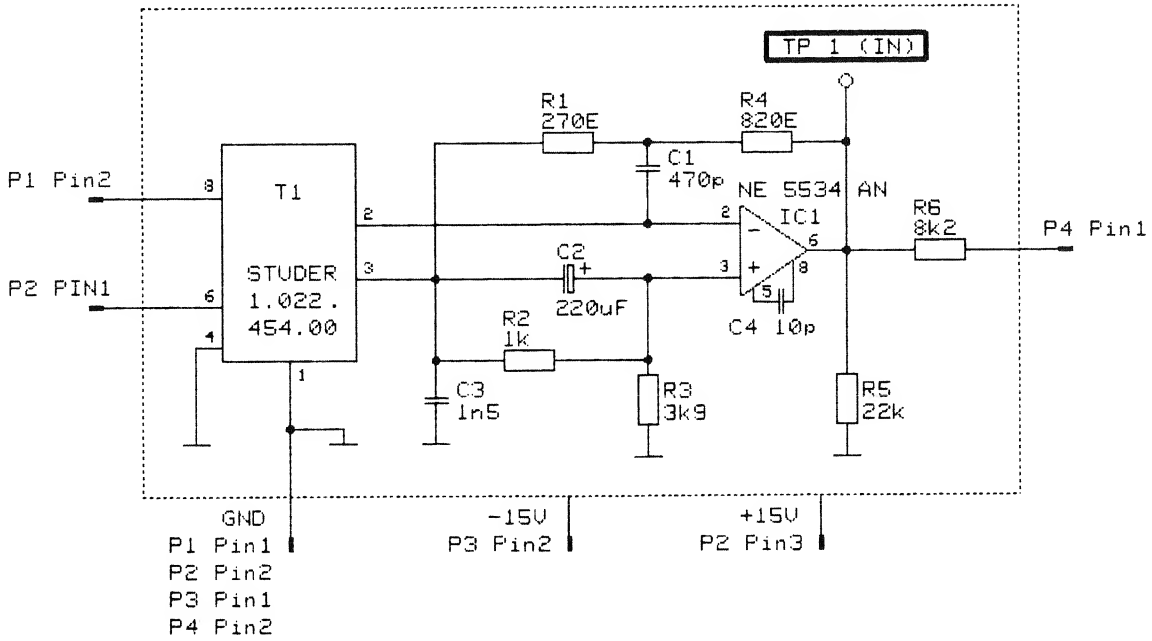

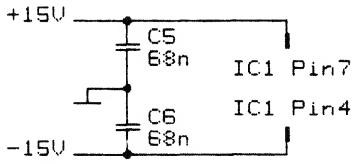

© 16.3.88 ER			
	D820 MCH A/D CONVERTER		PAGE 1 OF 1
STUDER	AD INPUT MODULE	SC	1.862.677.00

A/D INPUT MODULE 1.862.677.00

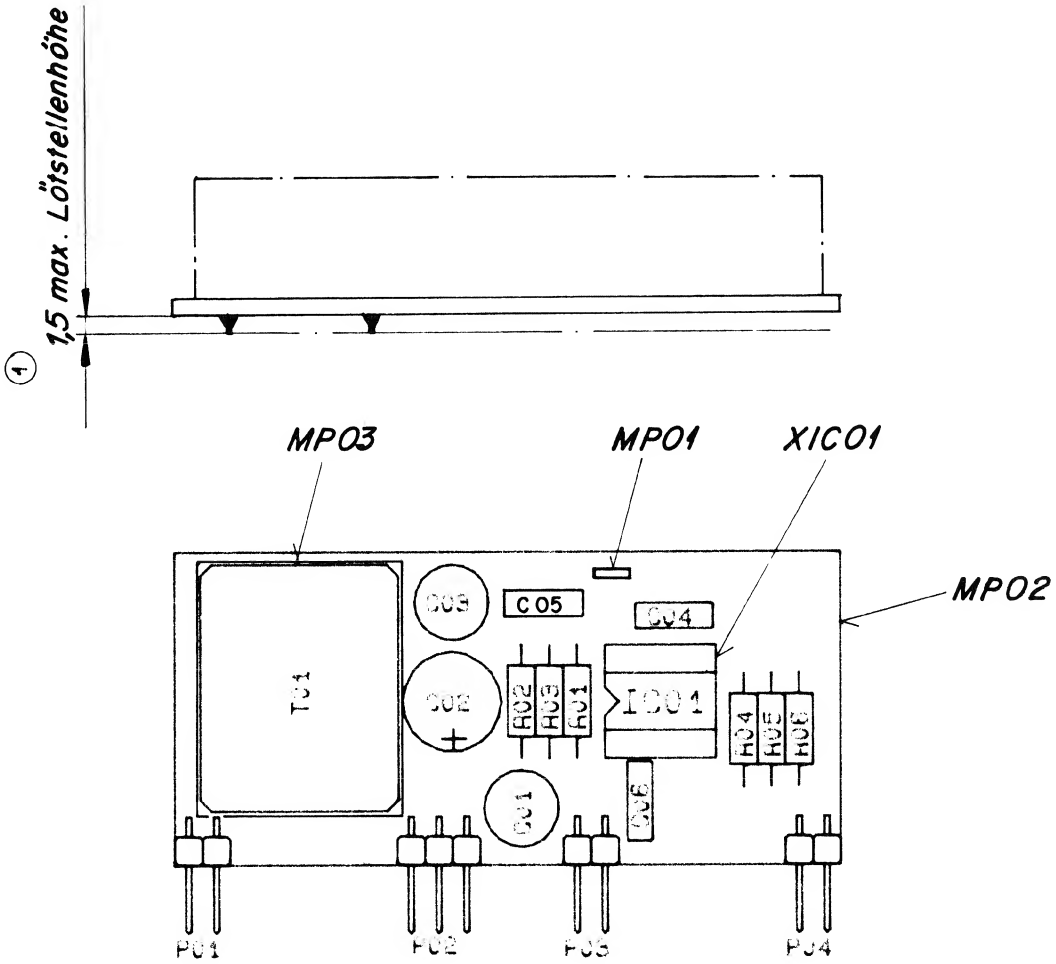

Nr. Etikette 1.862.677-01 aufgeklebt nach Fabrikationsmuster.

IND.	POS.NO.	PART NO.	VALUE	SPECIFICATIONS / EQUIVALENT	MANUF.
	C.....1	59.05.2471	470 p	2.5%, 50V, PP	ANY
	C.....2	59.22.3221	220 u	20%, 10V, EL	ANY
	C.....3	59.05.2152	1.5 n	2.5%, 50V, PP	ANY
	C.....4	59.34.1100	10 p	20%, 50V, CER	ANY
	C.....5	59.06.0683	68 n	10%, 63V, CER	ANY
	C.....6	59.06.0683	68 n	10%, 63V, CER	ANY
	IC....1	50.05.0244		NE 5534 SAN	ANY
	MP....1	54.02.0320		TESTPOINT	ANY
	MP....2	1.862.677.11		PCB	ST
	MP....3	1.022.400.03		INSULATOR FOR TRAFO	ANY
	MP....4	1.862.677.01		LABEL	ST
	P.....1	54.11.0132		SOLDERING PING	ANY
	P.....2	54.11.0132		SOLDERING PINS	ANY
	P.....3	54.11.0132		SOLDERING PINS	ANY
	P.....4	54.11.0132		SOLDERING PINS	ANY
	P.....5	54.11.0132		SOLDERING PINS	ANY
	P.....6	54.11.0132		SOLDERING PINS	ANY
	P.....7	54.11.0132		SOLDERING PINS	ANY
	P.....8	54.11.0132		SOLDERING PINS	ANY
	P.....9	54.11.0132		SOLDERING PINS	ANY
	R.....1	57.11.3271	270 E	1%, MF	ANY
	R.....2	57.11.3102	1 k	1%, MF	ANY
	R.....3	57.11.3392	3.9 k	1%, MF	ANY
	R.....4	57.11.3821	820 E	1%, MF	ANY
	R.....5	57.11.3223	22 k	1%, MF	ANY
	R.....6	57.11.3822	8.2 k	1%, MF	ANY
	T.....1	1.022.454.00		INPUT TRANSFORMER	St
	XIC...1	53.03.0166		DIL 8-POL	ANY

S T U D E R (00) 89/04/03 FAR A/D INPUT MODULE BACKBAG PL 1.862.677.00 PAGE 1

REMARKS: SERIEVERSION FREIGABE: 12.04.89
****

MANUFACTURERS:
ST = STUDER Ph = PHILIPS

ABBREVIATIONS:
CER = CERAMIC / FILM = FILM TYPE / XF = CLAMP FOR FUSES /
XIC = IC SOCKET / PP = POLYPROPYLENE

ORIG 89/04/03

S T U D E R (00) 89/04/03 FAR A/D INPUT MODULE BACKBAG PL 1.862.677.00 PAGE 2

CUE PIGGY BAG 1.862.684.00

COMPONENT LAYOUT :

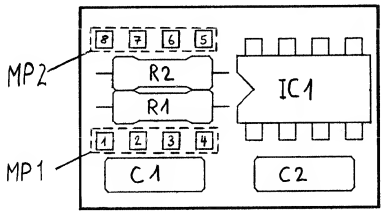

SCHEME :

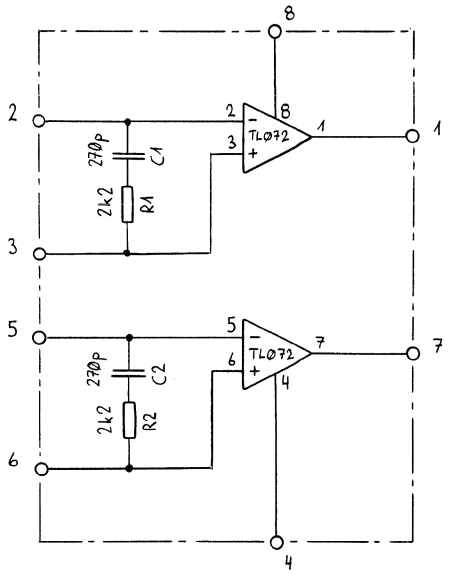

POSITION : Every CUE-BOARD will have two PIGGI BACK.

PIGGI BACK ① will be connected with the socket of IC 15.

PIGGI BACK ② will be connected with the socket of IC 51.

⓪ 08.12.89 fro	○ . .	○ . .	○ . .	○ . .
	D820 MCH CUE PIGGI BACK			PAGE 1 OF 1
STUDER			SC	1.862.684-00

CUE PIGGY BAG 1.862.684.00

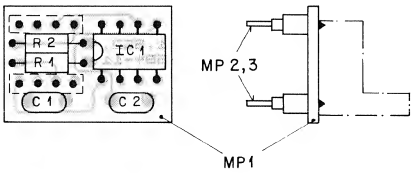

IND.	POS.NO.	PART NO.	VALUE	SPECIFICATIONS / EQUIVALENT	MANUF.
	C....01	59.34.4271	270 p	5%, N750 , CER	ANY
	C....02	59.34.4271	270 p	5%, N750 , CER	ANY
	IC...01	50.09.0121		TL 072 BCP	ANY
	MP...01	1.862.684.11		PCB	St
	MP...02	53.03.0251		LEISTE ********* QTY 4 **********	ANY
	MP...03	53.03.0251		LEISTE ********* QTY 4 **********	ANY
	R....01	57.11.3222	2,2 k	1%, 0207 , MF	ANY
	R....02	57.11.3222	2,2 k	1%, 0207 , MF	ANY

REMARKS:

MANUFACTURERS:
St = STUDER / Ph = PHILIPS / So = SONY

ABBREVIATIONS:
CER = CERAMIC / FILM = FILM TYPE / XF = CLAMP FOR FUSES /
XIC = IC SOCKET

ORIG 90/01/19

S T U D E R (00) 90/01/19 BAD CUE PIGGI BACK PL 1.862.684.00 PAGE 1

BLOCK DIAGRAM TIME CODE BACKBAG

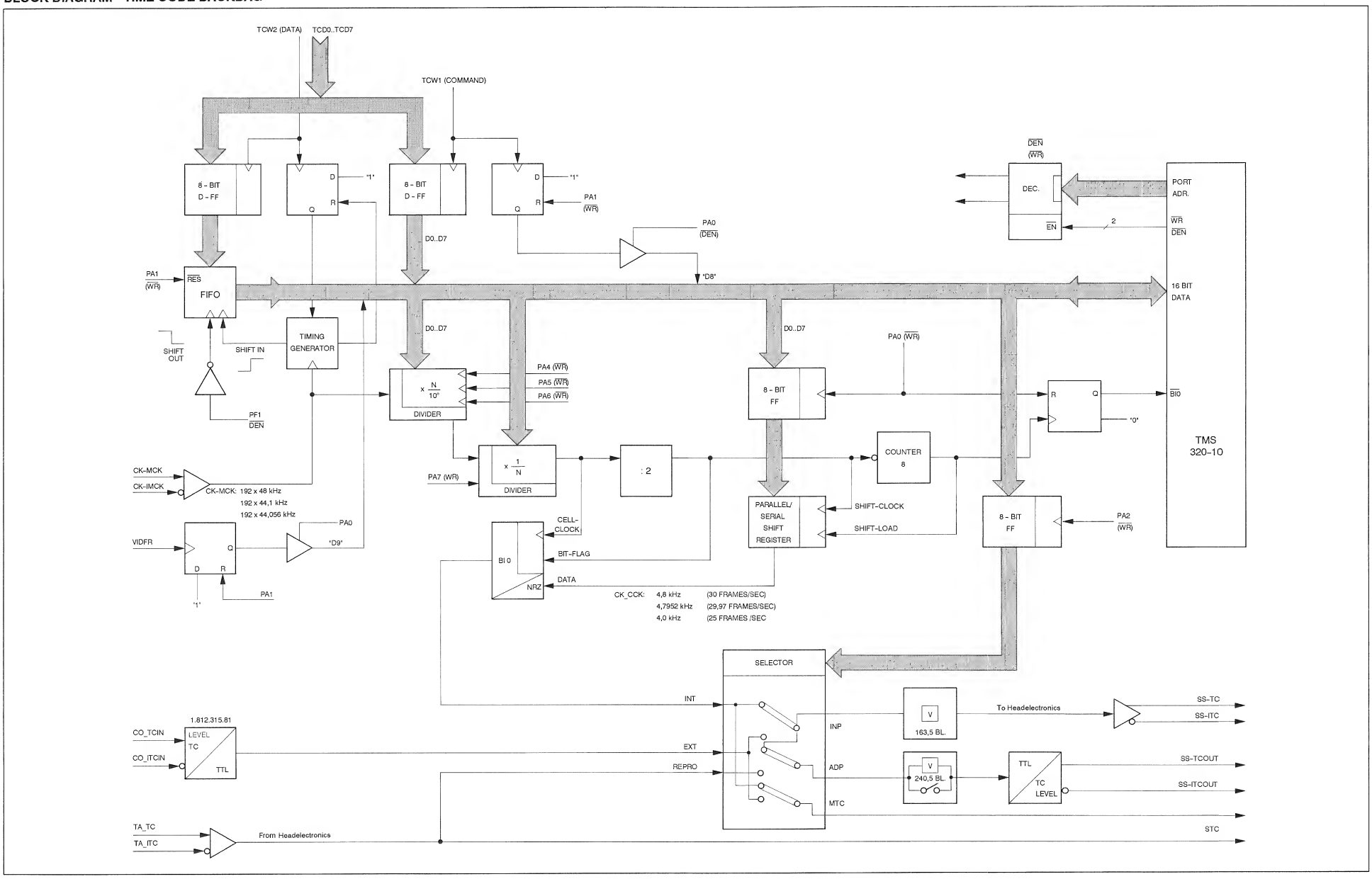

TIME CODE BACKBAG 1.862.685.21

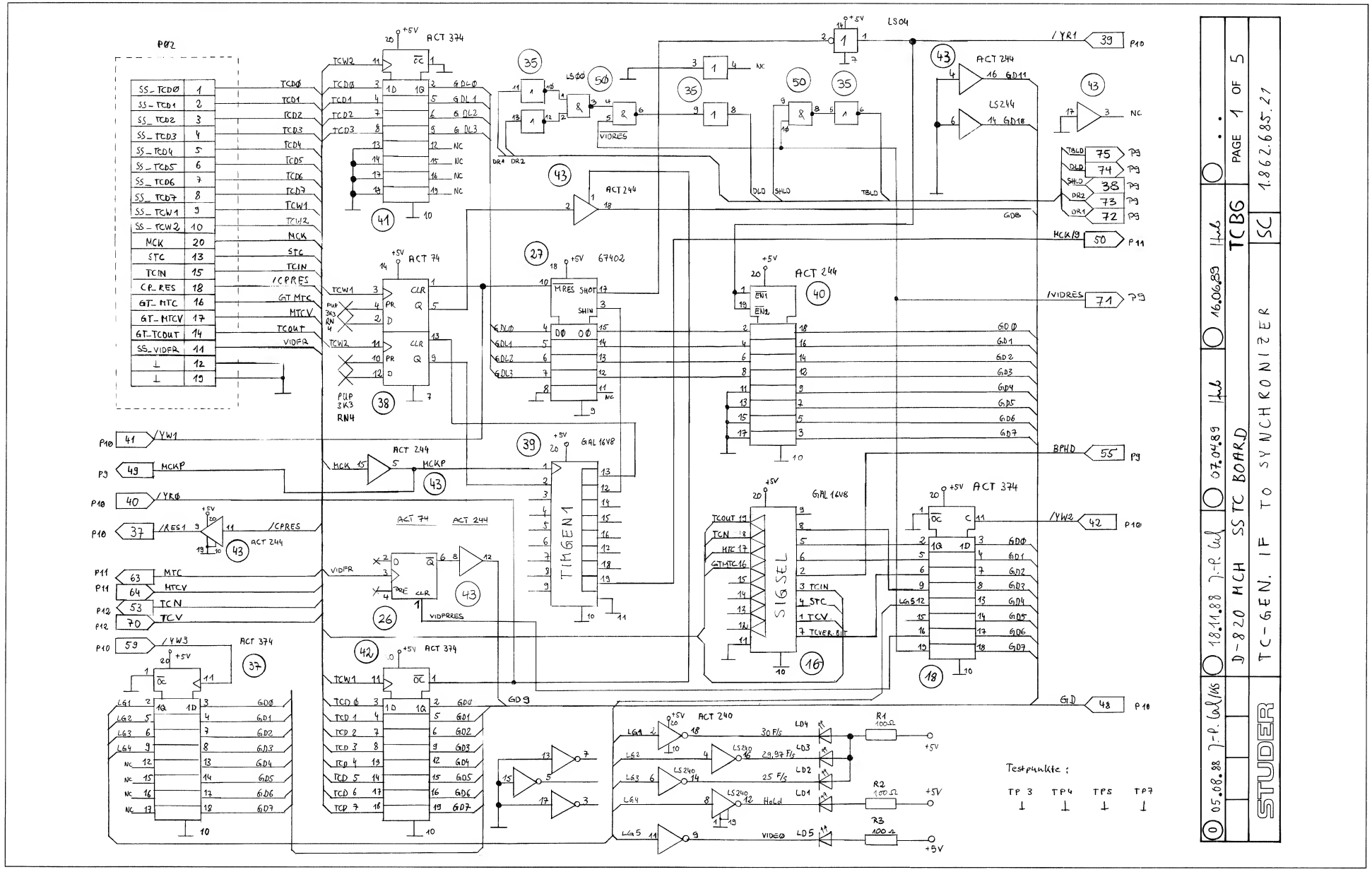

TIME CODE BACKBAG 1.862.685.21

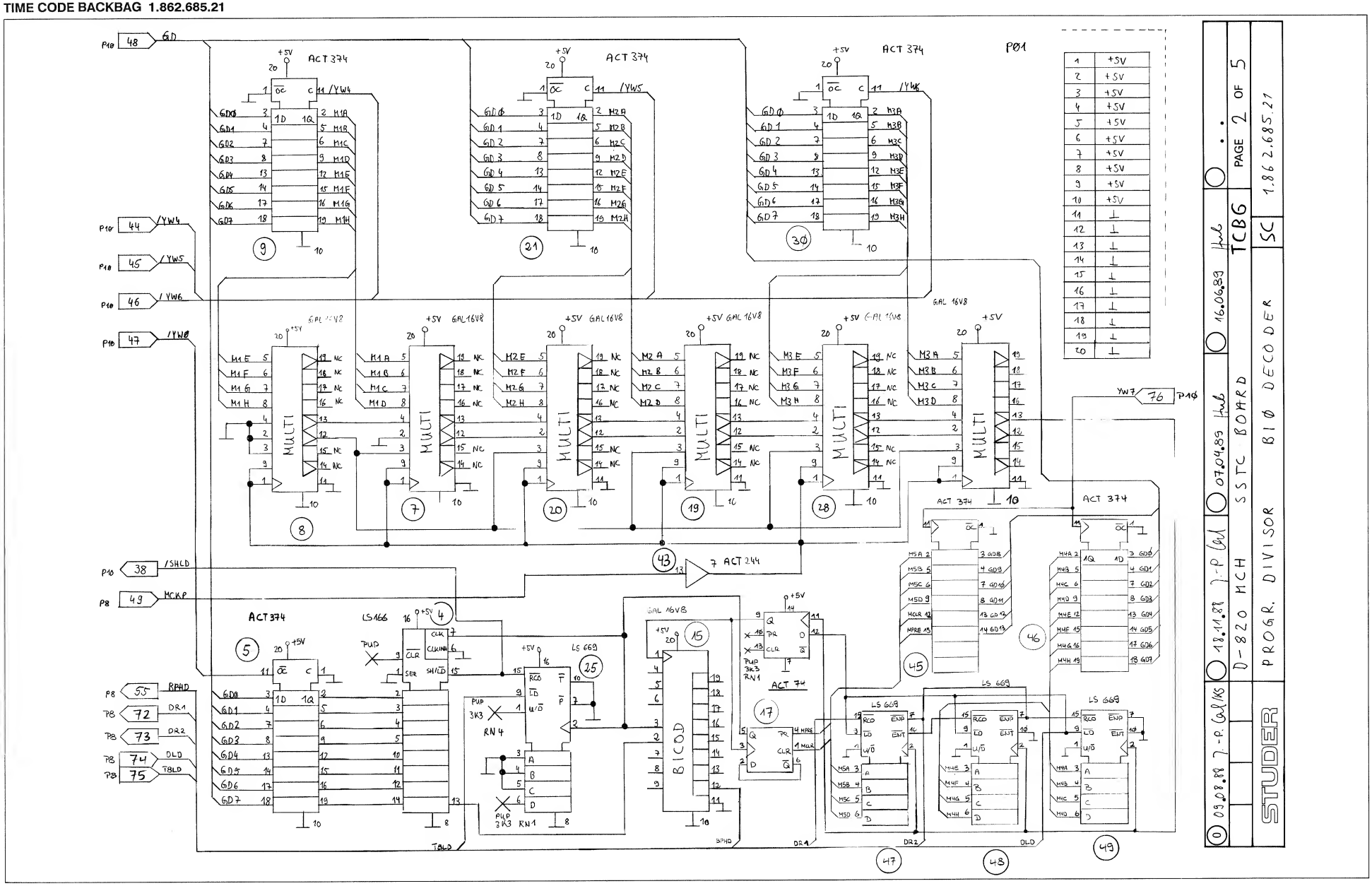

TIME CODE BACKBAG 1.862.685.21

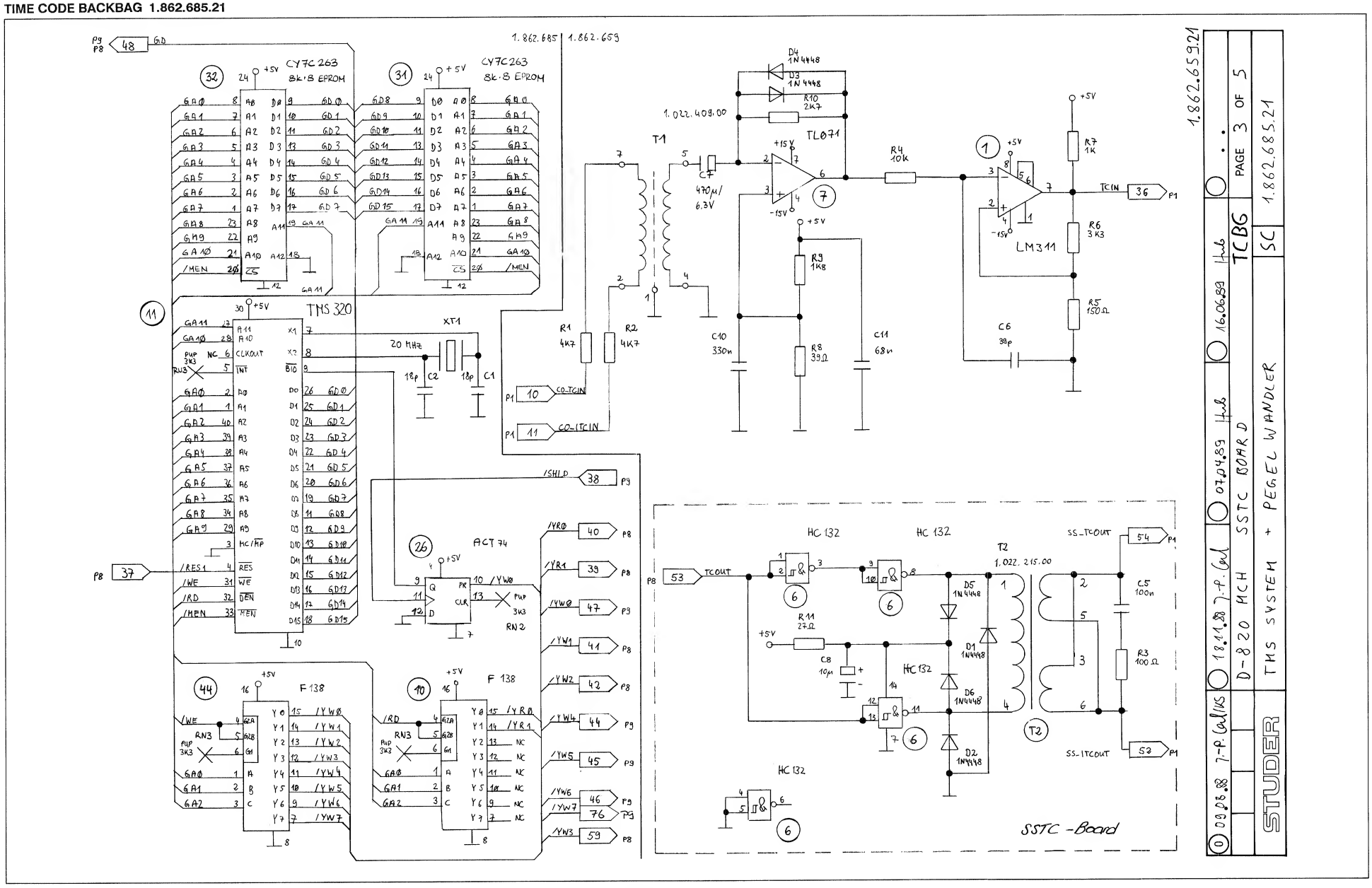

TIME CODE BACKBAG 1.862.685.21

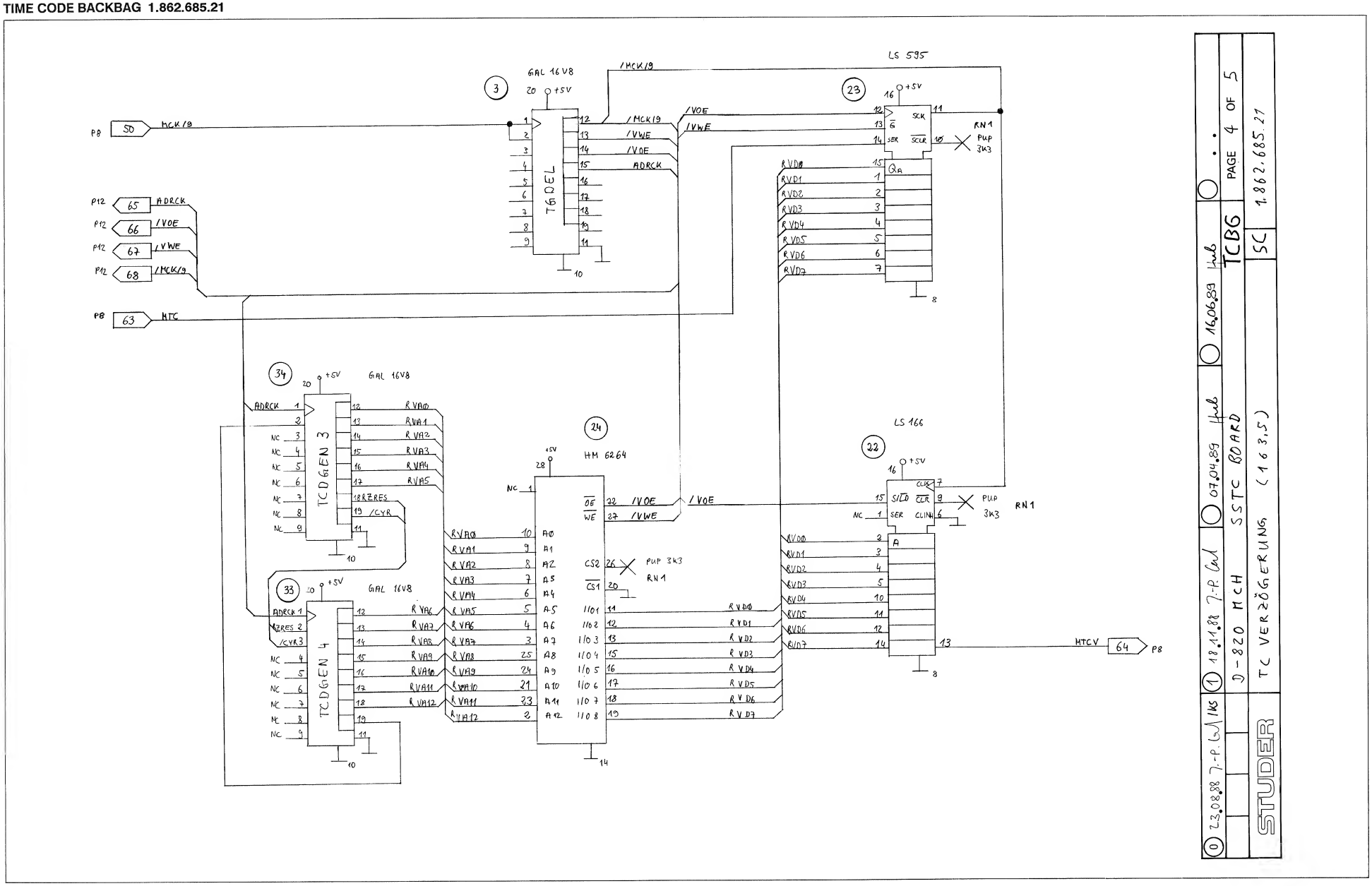

TIME CODE BACKBAG 1.862.685.21

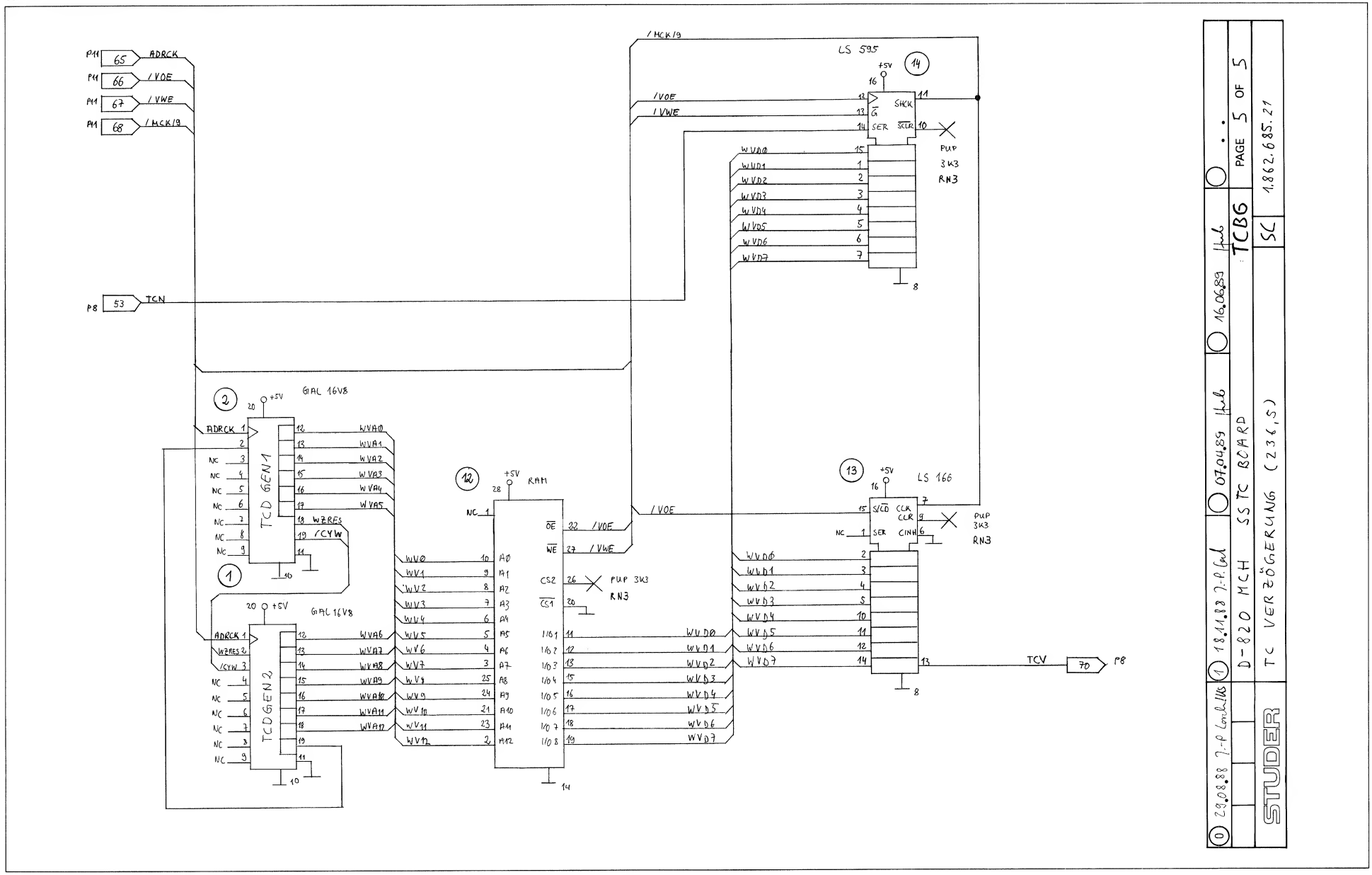

TIME CODE BACKBAG 1.862.685.21

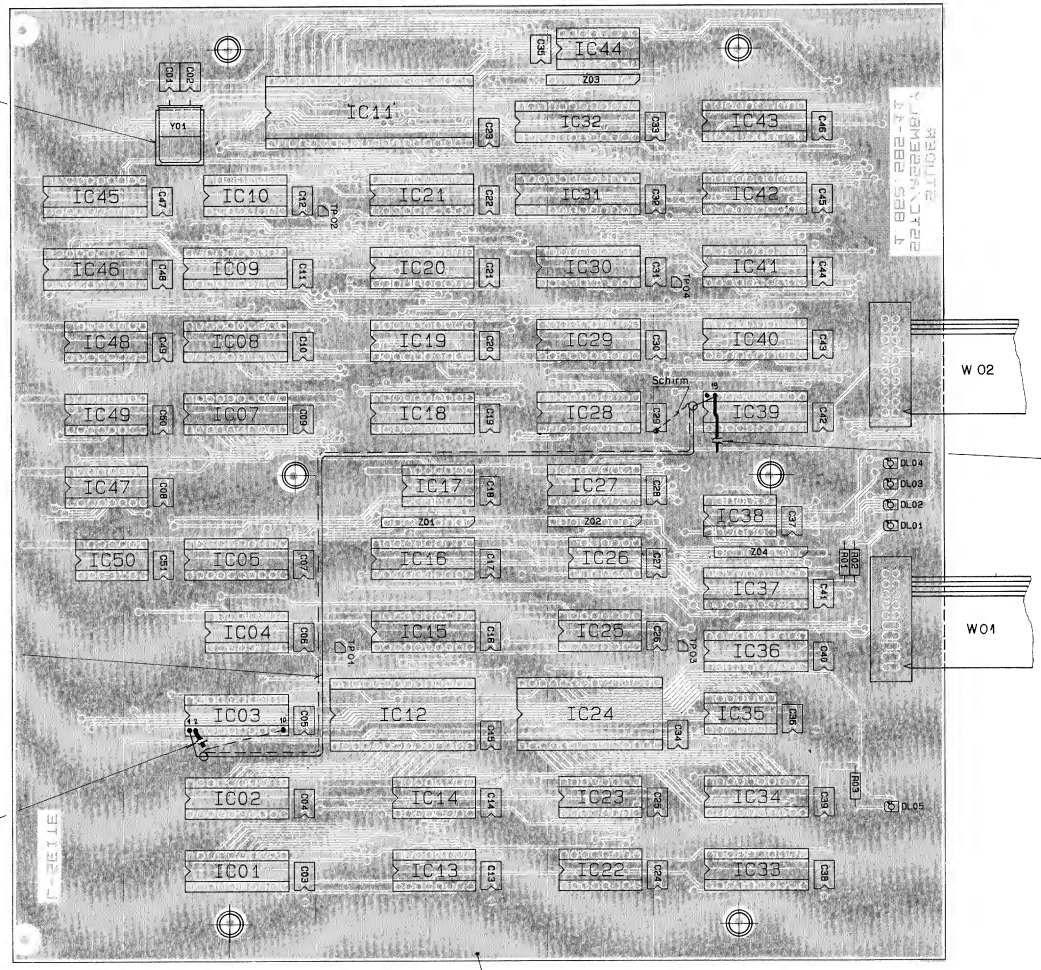

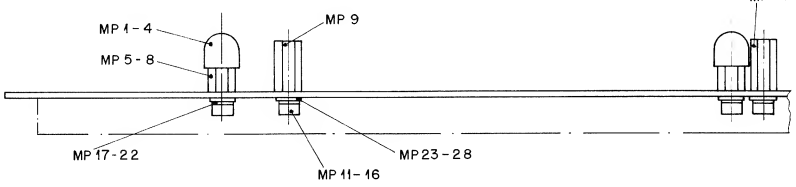

IC Sockel nach PL bestückt
Z.B XIC 11 = Sockel von IC 11

Schilder MP 29, MP 31, MP 32
aufgeklebt nach Fabrikationsmuster.

IND.	POS.NO.	PART NO.	VALUE	SPECIFICATIONS / EQUIVALENT		MANUF.
	C....01	59.34.1180	18 p	5%, NP 0 , CER		ANY
	C....02	59.34.1180	18 p	5%, NP 0 , CER		ANY
	C....03	59.06.0683	.068 u	10%, 63V , PETP		ANY
	C....04	59.06.0683	.068 u	10%, 63V , PETP		ANY
	C....05	59.06.0683	.068 u	10%, 63V , PETP		ANY
	C....06	59.06.0683	.068 u	10%, 63V , PETP		ANY
	C....07	59.06.0683	.068 u	10%, 63V , PETP		ANY
	C....08	59.06.0683	.068 u	10%, 63V , PETP		ANY
	C....09	59.06.0683	.068 u	10%, 63V , PETP		ANY
	C....10	59.06.0683	.068 u	10%, 63V , PETP		ANY
	C....11	59.06.0683	.068 u	10%, 63V , PETP		ANY
	C....12	59.06.0683	.068 u	10%, 63V , PETP		ANY
	C....13	59.06.0683	.068 u	10%, 63V , PETP		ANY
	C....14	59.06.0683	.068 u	10%, 63V , PETP		ANY
	C....15	59.06.0683	.068 u	10%, 63V , PETP		ANY
	C....16	59.06.0683	.068 u	10%, 63V , PETP		ANY
	C....17	59.06.0683	.068 u	10%, 63V , PETP		ANY
	C....18	59.06.0683	.068 u	10%, 63V , PETP		ANY
	C....19	59.06.0683	.068 u	10%, 63V , PETP		ANY
	C....20	59.06.0683	.068 u	10%, 63V , PETP		ANY
	C....21	59.06.0683	.068 u	10%, 63V , PETP		ANY
	C....22	59.06.0683	.068 u	10%, 63V , PETP		ANY
	C....23	59.06.0683	.068 u	10%, 63V , PETP		ANY
	C....24	59.06.0683	.068 u	10%, 63V , PETP		ANY
	C....25	59.06.0683	.068 u	10%, 63V , PETP		ANY
	C....26	59.06.0683	.068 u	10%, 63V , PETP		ANY
	C....27	59.06.0683	.068 u	10%, 63V , PETP		ANY
	C....28	59.06.0683	.068 u	10%, 63V , PETP		ANY
	C....29	59.06.0683	.068 u	10%, 63V , PETP		ANY
	C....30	59.06.0683	.068 u	10%, 63V , PETP		ANY
	C....31	59.06.0683	.068 u	10%, 63V , PETP		ANY
	C....32	59.06.0683	.068 u	10%, 63V , PETP		ANY
	C....33	59.06.0683	.068 u	10%, 63V , PETP		ANY
	C....34	59.06.0683	.068 u	10%, 63V , PETP		ANY
	C....35	59.06.0683	.068 u	10%, 63V , PETP		ANY
	C....36	59.06.0683	.068 u	10%, 63V , PETP		ANY
	C....37	59.06.0683	.068 u	10%, 63V , PETP		ANY

S T U D E R (00) 90/03/20 RU TC BACKBAG PL 1.862.685.21 PAGE 1

IND.	POS.NO.	PART NO.	VALUE	SPECIFICATIONS / EQUIVALENT		MANUF.
	C....38	59.06.0683	.068 u	10%, 63V , PETP		ANY
	C....39	59.06.0683	.068 u	10%, 63V , PETP		ANY
	C....40	59.06.0683	.068 u	10%, 63V , PETP		ANY
	C....41	59.06.0683	.068 u	10%, 63V , PETP		ANY
	C....42	59.06.0683	.068 u	10%, 63V , PETP		ANY
	C....43	59.06.0683	.068 u	10%, 63V , PETP		ANY
	C....44	59.06.0683	.068 u	10%, 63V , PETP		ANY
	C....45	59.06.0683	.068 u	10%, 63V , PETP		ANY
	C....46	59.06.0683	.068 u	10%, 63V , PETP		ANY
	C....47	59.06.0683	.068 u	10%, 63V , PETP		ANY
	C....48	59.06.0683	.068 u	10%, 63V , PETP		ANY
	C....49	59.06.0683	.068 u	10%, 63V , PETP		ANY
	C....50	59.06.0683	.068 u	10%, 63V , PETP		ANY
	C....51	59.06.0683	.068 u	10%, 63V , PETP		ANY
	DL...01	50.04.2121		TLUR 2401 RT DIFF		ANY
	DL...02	50.04.2132		TLUG 2401 GN DIFF		ANY
	DL...03	50.04.2132		TLUG 2401 GN DIFF		ANY
	DL...04	50.04.2132		TLUG 2401 GN DIFF		ANY
	DL...05	50.04.2133		TLUY 2401 GB DIFF		ANY
	IC...01	50.18.0100		16 V 8 - 25 LP	SW 1.862.976.20	ANY
	IC...02	50.18.0100		16 V 8 - 25 LP	SW 1.862.975.20	ANY
	IC...03	50.18.0100		16 V 8 - 25 LP	SW 1.862.979.20	ANY
	IC...04	50.06.0166		SN 74 LS 166 N		ANY
	IC...05	50.17.7374		74 ACT 374		ANY
	IC...07	50.18.0100		16 V 8 - 25 LP	SW 1.862.970.20	ANY
	IC...08	50.18.0100		16 V 8 - 25 LP	SW 1.862.970.20	ANY
	IC...09	50.17.7374		74 ACT 374		ANY
	IC...10	50.21.0138		74 F 138		ANY
	IC...11	50.16.1002		TMS 320C10		ANY
	IC...12	50.14.0133		HM 6264LP-15		ANY
	IC...13	50.06.0166		SN 74 LS 166 N		ANY
	IC...14	50.06.0595		SN 74 LS 595 N		ANY
	IC...15	50.18.0100		16 V 8 - 25 LP	SW 1.862.971.20	ANY
	IC...16	50.18.0100		16 V 8 - 25 LP	SW 1.862.972.20	ANY
	IC...17	50.17.7074		74 ACT 74		ANY

S T U D E R (00) 90/03/20 RU TC BACKBAG PL 1.862.685.21 PAGE 2

IND.	POS.NO.	PART NO.	VALUE	SPECIFICATIONS / EQUIVALENT		MANUF.
	IC...18	50.17.7374		74 ACT 374		ANY
	IC...19	50.18.0100		16 V 8 - 25 LP	SW 1.862.970.20	ANY
	IC...20	50.18.0100		16 V 8 - 25 LP	SW 1.862.970.20	ANY
	IC...21	50.17.7374		74 ACT 374		ANY
	IC...22	50.06.0166		SN 74 LS 166 N		ANY
	IC...23	50.06.0595		SN 74 LS 595 N		ANY
	IC...24	50.14.0133		HM 6264LP-15		ANY
	IC...25	50.06.0669		SN 74 LS 669 N		ANY
	IC...26	50.17.7074		74 ACT 74		ANY
	IC...27	50.14.1001		IDT72402 L100		ANY
	IC...28	50.18.0100		16 V 8 - 25 LP	SW 1.862.970.20	ANY
	IC...29	50.18.0100		16 V 8 - 25 LP	SW 1.862.970.20	ANY
	IC...30	50.17.7374		74 ACT 374		ANY
	IC...31	50.14.2003		CY 7 C 263	SW 1.862.980.20	ANY
	IC...32	50.14.2003		CY 7 C 263	SW 1.862.981.20	ANY
(00)	IC...33	50.18.0100		16 V 8 - 25 LP	SW 1.862.977.20	ANY
(03)	IC...33	50.18.0100		16 V 8 - 25 LP	SW 1.862.978.20	ANY
(00)	IC...34	50.18.0100		16 V 8 - 25 LP	SW 1.862.978.20	ANY
(03)	IC...34	50.18.0100		16 V 8 - 25 LP	SW 1.862.977.20	ANY
	IC...35	50.06.0004		SN 74 LS 04 N	TTL	ANY
	IC...36	50.17.7240		74 ACT 240		ANY
	IC...37	50.17.7374		74 ACT 374		ANY
	IC...38	50.17.7074		74 ACT 74		ANY
	IC...39	50.18.0100		16 V 8 - 25 LP	SW 1.862.973.20	ANY
	IC...40	50.17.7244		74 ACT 244		ANY
	IC...41	50.17.7374		74 ACT 374		ANY
	IC...42	50.17.7374		74 ACT 374		ANY
	IC...43	50.17.7244		74 ACT 244		ANY
	IC...44	50.21.0138		74 F 138		ANY
	IC...45	50.17.7374		74 ACT 374		ANY
	IC...46	50.17.7374		74 ACT 374		ANY
	IC...47	50.21.0169		74 F 169		ANY
	IC...48	50.21.0169		74 F 169		ANY
	IC...49	50.21.0169		74 F 169		ANY
	IC...50	50.06.0000		74 LS 00		ANY
	MP...01	1.077.100.20		GUMMIKAPPE		ANY

S T U D E R (00) 90/03/20 RU TC BACKBAG PL 1.862.685.21 PAGE 3

TIME CODE BACKBAG 1.862.685.21

IND.	POS.NO.	PART NO.	VALUE	SPECIFICATIONS / EQUIVALENT	MANUF.
	MP...02	1.077.100.20		GUMMIKAPPE	ANY
	MP...03	1.077.100.20		GUMMIKAPPE	ANY
	MP...04	1.077.100.20		GUMMIKAPPE	ANY
	MP...05	1.010.041.27		MUTTERBOLZEN M 3 * 28	ST
	MP...06	1.010.041.27		MUTTERBOLZEN M 3 * 28	ST
	MP...07	1.010.041.27		MUTTERBOLZEN M 3 * 28	ST
	MP...08	1.010.041.27		MUTTERBOLZEN M 3 * 28	ST
(00)	MP...09	1.010.217.27		MUTTERBOLZEN, S 5.5/M 3 * 28/5	ST
(02)	MP...09	1.010.026.27		MUTTERBOLZEN, S 5.5/M 3 * 30	ST
(00)	MP...10	1.010.217.27		MUTTERBOLZEN, S 5.5/M 3 * 28/5	ST
(02)	MP...10	1.010.026.27		MUTTERBOLZEN, S 5.5/M 3 * 30	ST
	MP...11	21.51.8355		LIN-SCHR. IS , NI , M 3 * 8	ANY
	MP...12	21.51.8355		LIN-SCHR. IS , NI , M 3 * 8	ANY
	MP...13	21.51.8355		LIN-SCHR. IS , NI , M 3 * 8	ANY
	MP...14	21.51.8355		LIN-SCHR. IS , NI , M 3 * 8	ANY
	MP...15	21.51.8355		LIN-SCHR. IS , NI , M 3 * 8	ANY
	MP...16	21.51.8355		LIN-SCHR. IS , NI , M 3 * 8	ANY
	MP...17	24.16.1030		RIPPENSCHEIBE A D 3.2	ANY
	MP...18	24.16.1030		RIPPENSCHEIBE A D 3.2	ANY
	MP...19	24.16.1030		RIPPENSCHEIBE A D 3.2	ANY
	MP...20	24.16.1030		RIPPENSCHEIBE A D 3.2	ANY
	MP...21	24.16.1030		RIPPENSCHEIBE A D 3.2	ANY
	MP...22	24.16.1030		RIPPENSCHEIBE A D 3.2	ANY
	MP...23	23.01.1032		U-SCHEIBE D 3.2/ 6 *0.5	ANY
	MP...24	23.01.1032		U-SCHEIBE D 3.2/ 6 *0.5	ANY
	MP...25	23.01.1032		U-SCHEIBE D 3.2/ 6 *0.5	ANY
	MP...26	23.01.1032		U-SCHEIBE D 3.2/ 6 *0.5	ANY
	MP...27	23.01.1032		U-SCHEIBE D 3.2/ 6 *0.5	ANY
	MP...28	23.01.1032		U-SCHEIBE D 3.2/ 6 *0.5	ANY
	MP...29	1.862.685.01		ETIKETTE	ST
	MP...30	1.862.685.11		PCB	ST
	MP...31	43.01.0108		ESE-WARNSCHILD	ANY
	MP...32	1.101.001.20		ETIKETTE HARDWARE -20	ST
	R....01	57.11.3101	100	1%, 0207 , MF	ANY
	R....02	57.11.3101	100	1%, 0207 , MF	ANY
	R....03	57.11.3101	100	1%, 0207 , MF	ANY

IND.	POS.NO.	PART NO.	VALUE	SPECIFICATIONS / EQUIVALENT	MANUF.
	RZ...01	57.88.4332		8 * 3.3 k, 2%, SIP 9	ANY
	RZ...02	57.88.4332		8 * 3.3 k, 2%, SIP 9	ANY
	RZ...03	57.88.4332		8 * 3.3 k, 2%, SIP 9	ANY
	RZ...04	57.88.4332		8 * 3.3 k, 2%, SIP 9	ANY
	TP....1	54.02.0320		SOLDERING PIN	ANY
	TP....2	54.02.0320		SOLDERING PIN	ANY
	TP....3	54.02.0320		SOLDERING PIN	ANY
	TP....4	54.02.0320		SOLDERING PIN	ANY
	W....01	1.023.112.04		FLACHKABEL 20 POL. 0/1 M	ST
	W....02	1.023.112.04		FLACHKABEL 20 POL. 0/1 M	ST
	XIC..01	53.03.0165		DIL 20-POL, LOET	ANY
	XIC..02	53.03.0165		DIL 20-POL, LOET	ANY
	XIC..03	53.03.0165		DIL 20-POL, LOET	ANY
(00)	XIC..06	53.03.0165		DIL 20-POL, LOET	ANY
(01)	XIC..06			not used	
	XIC..07	53.03.0165		DIL 20-POL, LOET	ANY
	XIC..08	53.03.0165		DIL 20-POL, LOET	ANY
	XIC..11	53.03.0172		DIL 40-POL, LOET	ANY
	XIC..12	53.03.0173		DIL 28-POL, LOET	ANY
	XIC..15	53.03.0165		DIL 20-POL, LOET	ANY
	XIC..16	53.03.0165		DIL 20-POL, LOET	ANY
	XIC..19	53.03.0165		DIL 20-POL, LOET	ANY
	XIC..20	53.03.0165		DIL 20-POL, LOET	ANY
	XIC..24	53.03.0173		DIL 28-POL, LOET	ANY
	XIC..28	53.03.0165		DIL 20-POL, LOET	ANY
	XIC..29	53.03.0165		DIL 20-POL, LOET	ANY
	XIC..31	53.03.0182		DIL 24-POL, LOET	ANY
	XIC..32	53.03.0182		DIL 24-POL, LOET	ANY
	XIC..33	53.03.0165		DIL 20-POL, LOET	ANY
	XIC..34	53.03.0165		DIL 20-POL, LOET	ANY
	XIC..39	53.03.0165		DIL 20-POL, LOET	ANY
	Y....01	89.01.1007		20.000 MHZ, HC 49/U	ANY

IND.	POS.NO.	PART NO.	VALUE	SPECIFICATIONS / EQUIVALENT	MANUF.

REMARKS:
1. FREIGABE: 09.08.89 HUB
   ****

MANUFACTURERS:
St = STUDER, Ph = PHILIPS, BB = BURR BROWN, Ha = HARRIS

ABBREVIATIONS:
CER = CERAMIC / FILM = FILM TYPE / XF = CLAMP FOR FUSES /
XIC = IC SOCKET

ORIG 90/03/20

CPU PIGGY BAG 1.862.686.20

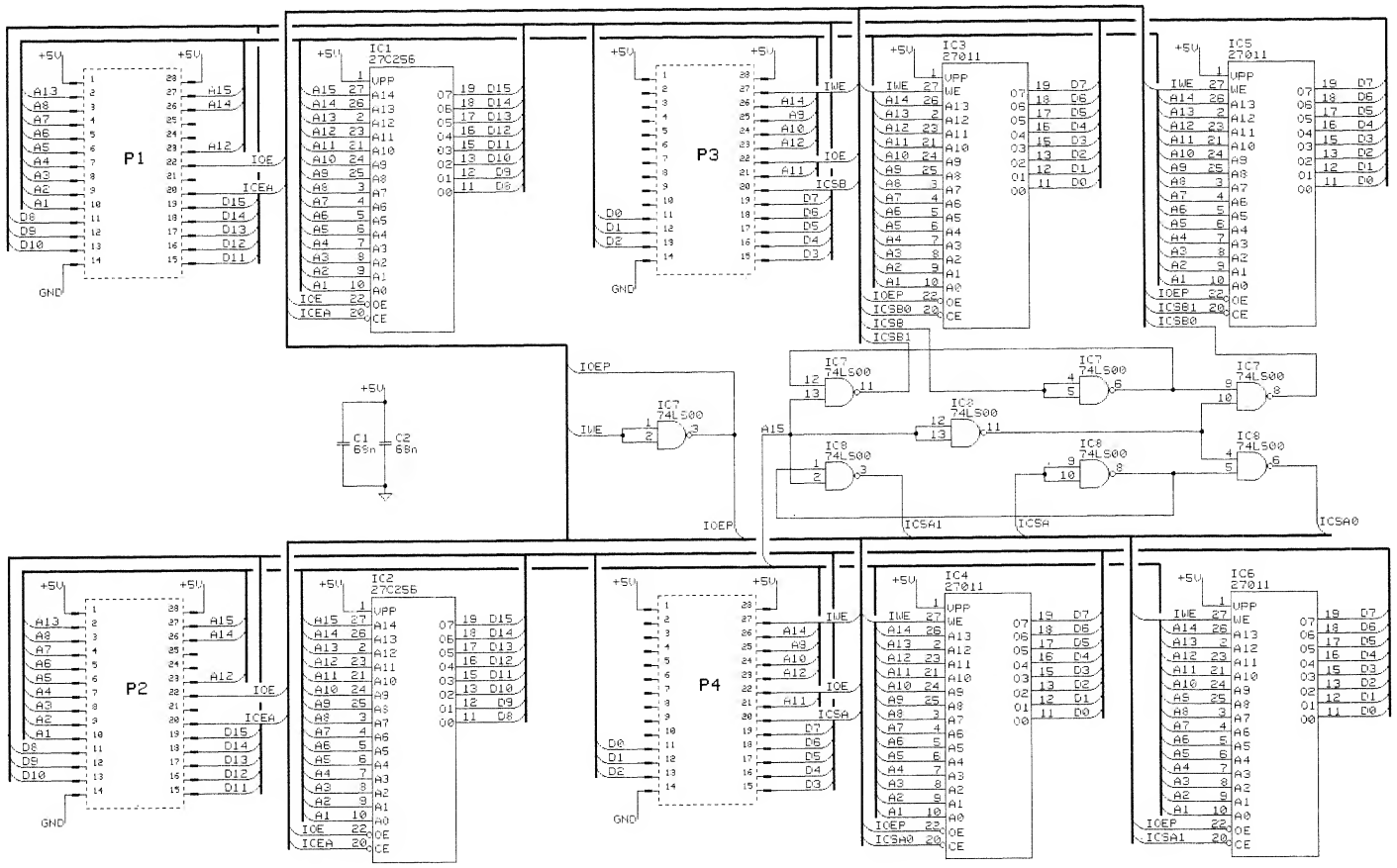

10.08.89 BAD				
	D820 MCH			PAGE 1 OF 1
STUDER	CPU-PIGGI-BACK		SC	1.862.686.20

CPU PIGGY BAG 1.862.686.20

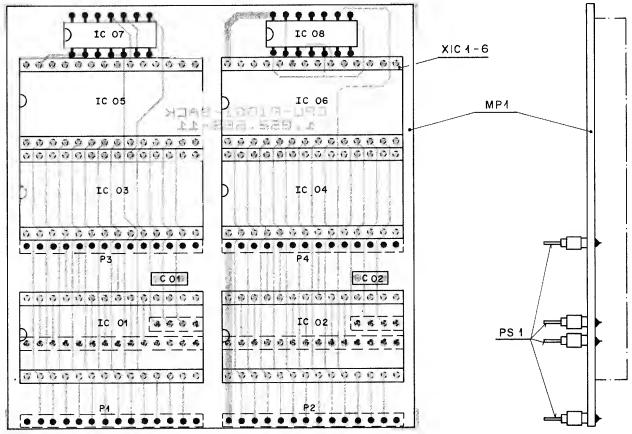

IND.	POS.NO.	PART NO.	VALUE	SPECIFICATIONS / EQUIVALENT	MANUF.
	C.....1	59.06.0683	68 nF	10%, 63V, PETP	ANY
	C.....2	59.06.0683	68 nF	10%, 63V, PETP	ANY
	IC....1	50.14.2004		HN 27 C256 G - 25 (SW 1.862.924.20)	ANY
	IC....2	50.14.2004		HN 27 C256 G - 25 (SW 1.862.925.20)	ANY
	IC....3	50.14.2006		27011 DIL 28 (SW 1.862.926.20)	ANY
	IC....4	50.14.2006		27011 DIL 28 (SW 1.862.926.20)	ANY
	IC....5	50.14.2006		27011 DIL 28 (SW 1.862.926.20)	ANY
	IC....6	50.14.2006		27011 DIL 28 (SW 1.862.926.20)	ANY
	IC....7	50.06.0000		SN 74 LS 00 N	ANY
	IC....8	50.06.0000		SN 74 LS 00 N	ANY
	MP....1	1.862.686.11		CPU-PIGGI-BACK PCB	St
	MP....2	1.862.686.01		NR.-ETIKETTE 5 * 20	St
	MP....3	49.01.0108		ESD-WARNSCHILD	ANY
	MP....4	1.101.001.20		ETIKETTE 5 * 20 HARDWARE	St
	PS....1	53.03.0252		STIFTLEISTE **** QTY 92 **********	ANY
	XIC...1	53.03.0173		DIL 28-POL	ANY
	XIC...2	53.03.0173		DIL 28-POL	ANY
	XIC...3	53.03.0173		DIL 28-POL	ANY
	XIC...4	53.03.0173		DIL 28-POL	ANY
	XIC...5	53.03.0173		DIL 28-POL	ANY
	XIC...6	53.03.0173		DIL 28-POL	ANY

S T U D E R (00) 89/03/21 ZT CPU-PIGGI-BACK PL 1.862.686.20 PAGE 1

IND.	POS.NO.	PART NO.	VALUE	SPECIFICATIONS / EQUIVALENT	MANUF

REMARKS: SERIEVERSION FREIGABE: 13.04.89 (KORR.28.4. RU)
****

MANUFACTURERS:
St = STUDER, Ph = PHILIPS, BB = BURR BROWN, Ha = HARRIS

ABBREVIATIONS:
CER = CERAMIC / FILM = FILM TYPE / XF = CLAMP FOR FUSES /
XIC = IC SOCKET

ORIG 89/03/21

S T U D E R (00) 89/03/21 ZT CPU-PIGGI-BACK PL 1.862.686.20 PAGE 2

TBC ASSEMBLY 1.862.687.00

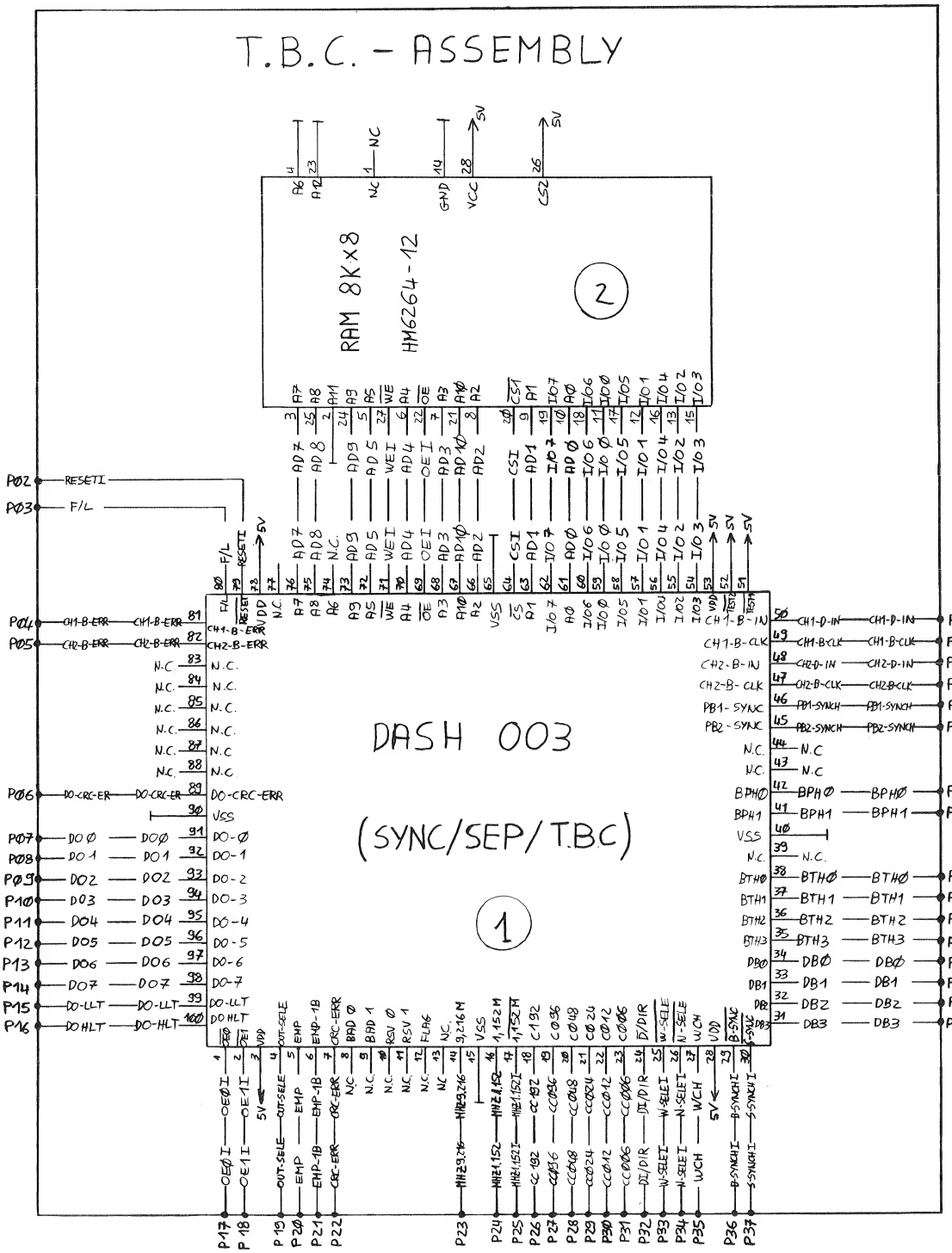

0 02.06.88	..	..	..	..
	MEHRKANAL-MASCHINE			PAGE 1 OF 1
STUDER	T.B.C. ASSEMBLY		SC	1-862-687-00

TBC ASSEMBLY 1.862.687.00

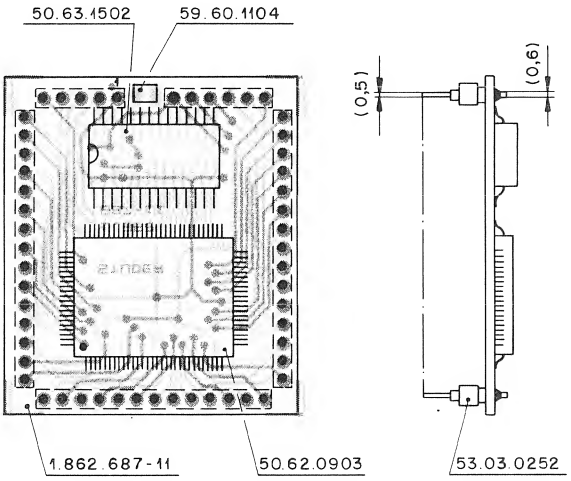

Schilder 43.01.0108 / 1.862.687-01
aufgeklebt nach Fabrikationsmuster.

IND.	POS.NO.	PART NO.	VALUE	SPECIFICATIONS / EQUIVALENT	MANUF.
	C.....1	59.60.1104	100 n	20%, GENERAL PURPOSE	ANY
	IC....1	50.62.0903		DASH 003 AQ	So
	IC....2	50.63.1502		HM 6264 LFP-12	ANY
	MP....1	1.862.687.01		ETIKETTE	ANY
	MP....2	1.862.687.11		TBC-PCB	Stu
	MP....3	43.01.0108		ESE-WARNSCHILD	ANY
	PS....1	53.03.0252		P STIFTLEISTE **QTY54**	ANY

REMARKS: SERIEVERSION FREIGABE:12.04.89
****

MANUFACTURERS:
St = STUDER Ph = PHILIPS So = SONY

ABBREVIATIONS:
CER = CERAMIC / FILM = FILM TYPE / XF = CLAMP FOR FUSES /
XIC = IC SOCKET

ORIG 89/03/30

S T U D E R (00) 89/03/30 ZT TBC ASSEMBLY PL 1.862.687.00 PAGE 1

MASTER I/O INPUT BACKBAG 1.862.688.00

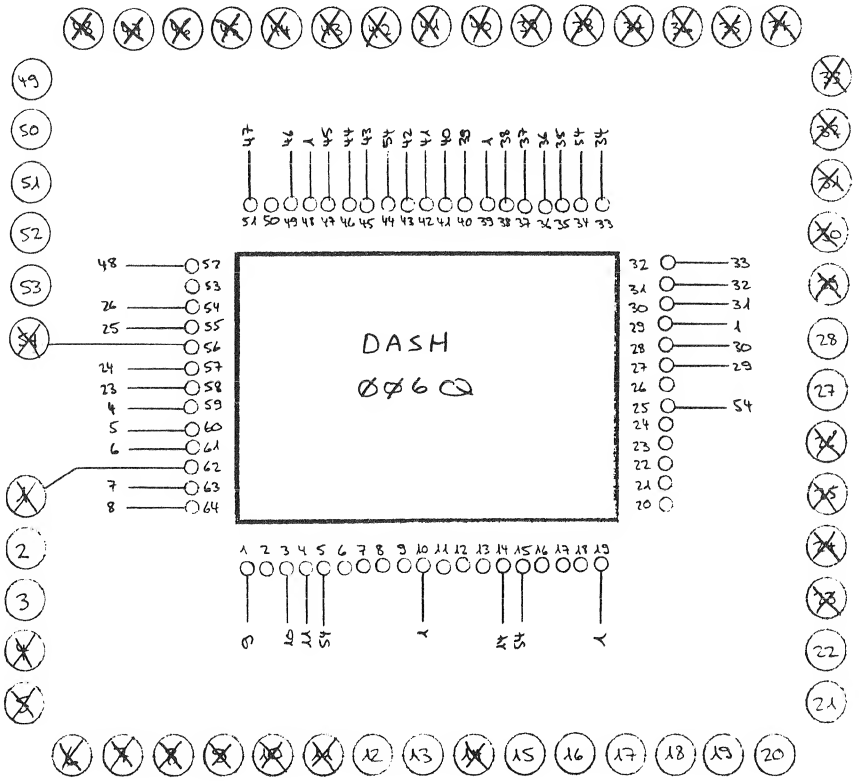

0 08.06.88 DH	. .	. .	. .	. .
	D820 MCH			PAGE 1 OF 1
STUDER	MIO Input Backbag	MIB6	SC	1.862.688-00

MASTER I/O INPUT BACKBAG 1.862.688.00

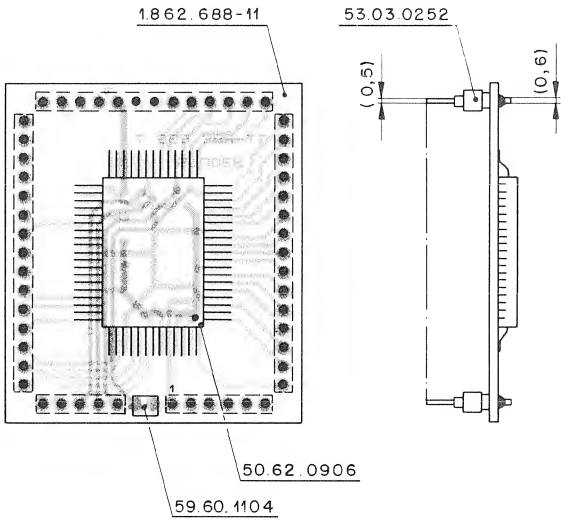

Schilder 43.01.0108 / 1.862.688-11
aufgeklebt nach Fabrikationsmuster.

IND.	POS.NO.	PART NO.	VALUE	SPECIFICATIONS / EQUIVALENT	MANUF.
	C.....1	59.60.1104		100 n, 10%	ANY
	IC....1	50.62.0906		DASH 006Q	So
	MP....1	1.862.688.11		M1BG PCB	St
	MP....2	43.01.0108		ESE-WARNSCHILD	ANY
	MP....3	1.862.688.01		NR.-ETIKETTE 5 * 20	ANY
	PS....1	53.03.0252		STIFTLEISTE** QTY 5, **********	ANY

REMARKS: SERIEVERSION FREIGABE 13.04.89
****

MANUFACTURERS:
St = STUDER / Ph = PHILIPS / So = SONY

ABBREVIATIONS:
CER = CERAMIC / FILM = FILM TYPE / XF = CLAMP FOR FUSES /
XIC = IC SOCKET

ORIG 89/02/23

S T U D E R (00) 89/02/23 ZT MIO INPUT BACKBAG PL 1.862.688.00 PAGE 1

MASTER I/O OUTPUT BACKBAG 1.862.689.00

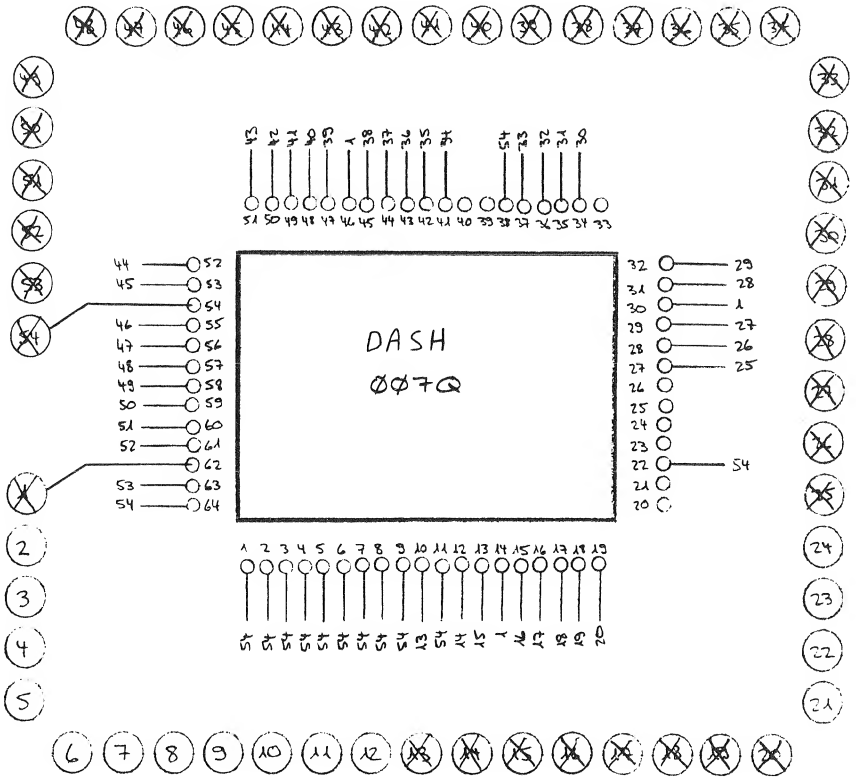

0 08.06.88 DH	. .	. .	. .	. .
	D820 MCH			PAGE 1 OF 1
STUDER	MIO Output Backbag	MOB6	SC	1.862.689-00

MASTER I/O OUTPUT BACKBAG 1.862.689.00

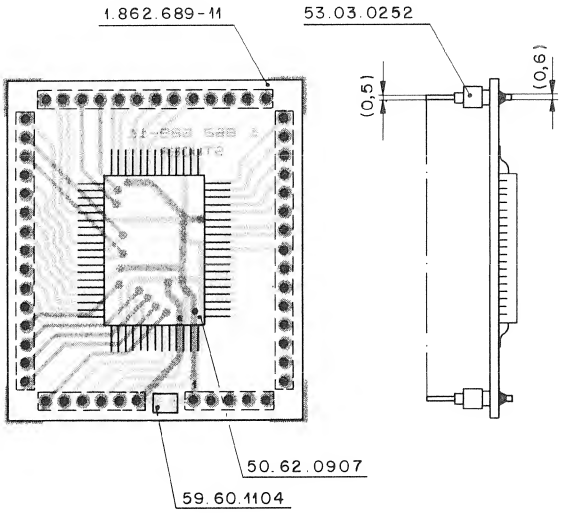

Schilder 43.01.0108 / 1.862.689-01
aufgeklebt nach Fabrikationsmuster.

IND.	POS.NO.	PART NO.	VALUE	SPECIFICATIONS / EQUIVALENT	MANUF.
	C.....1	59.60.1104		100 n 10%	ANY
	IC....1	50.62.0907		DASH 007Q	So
	MP....1	1.862.689.11		MOBG PCB	St
	MP....2	43.01.0108		ESE-WARNSCHILD	ANY
	MP....3	1.862.689.01		NR.-ETIKETTE 5 * 20	ANY
	PS....1	53.03.0252		P STIFTLEISTE** QTY 54 **********	ANY

REMARKS: SERIEVERSION FREIGABE: 13.04.89
****

MANUFACTURERS:
St = STUDER / Ph = PHILIPS / So = SONY

ABBREVIATIONS:
CER = CERAMIC / FILM = FILM TYPE / XF = CLAMP FOR FUSES /
XIC = IC SOCKET

ORIG 89/02/23

S T U D E R (00) 89/02/23 ZT MIO OUTPUT BACKBAG PL 1.862.689.00 PAGE 1

BLOCKDIAGRAM DP AUX KEYS

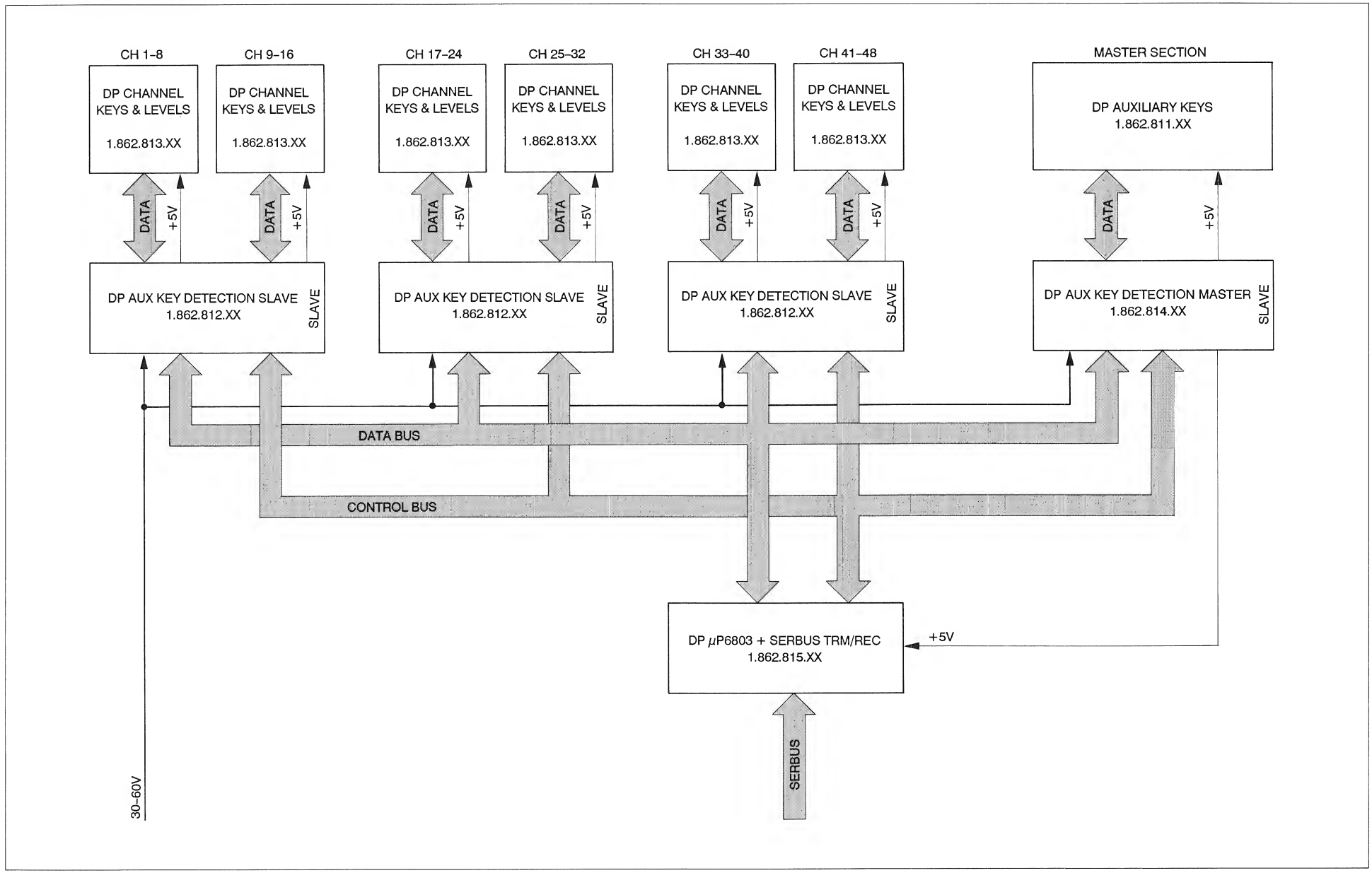

DP AUX KEYS 1.862.811.00

Aux Panel Led's :

DL 01 = Format Missmatch	DL 28 = Reserve
DL 02 = System Error	DL 29 = Reserve
DL 03 = Cue1 Record	DL 30 = User 1
DL 04 = Cue2 Record	DL 31 = User 2
DL 05 = Cue1 Arecord	DL 32 = User 3
DL 06 = Cue2 Arecord	DL 33 = User 4
DL 07 = Cue1 Ready	DL 34 = All Ready
DL 08 = Cue1 Input	DL 35 = New Record
DL 09 = Cue2 Ready	DL 36 = Assembly Record
DL 10 = Cue2 Input	DL 37 = Insert Record
DL 11 = TC Record	DL 38 = Mute Record
DL 12 = RT Record	DL 39 = All Safe
DL 13 = TC Ready	DL 40 = Ping Pong
DL 14 = TC Input	DL 41 = Master Safe
DL 15 = Reserve	DL 42 = Rehearse
DL 16 = Reserve	DL 43 = Reserve
DL 17 = Cue1 Level	DL 44 = Channel on
DL 18 = Cue2 Level	DL 45 = Channel off
DL 19 = TC Level	DL 46 = Emphasis on
DL 20 = RT Level	DL 47 = Emphasis off
DL 21 = Cue1 Safe	DL 48 = All Input
DL 22 = Cue1 Repro	DL 49 = All Repro
DL 23 = Cue2 Safe	DL 50 = Peak Hold
DL 24 = Cue2 Repro	DL 51 = Reserve
DL 25 = TC Safe	DL 52 = Auto Input
DL 26 = TC Repro	DL 53 = Auto Mute
DL 27 = Reserve	

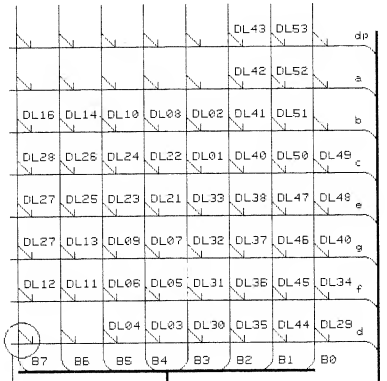

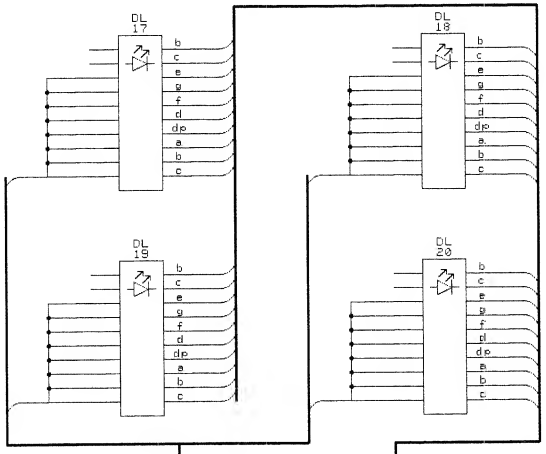

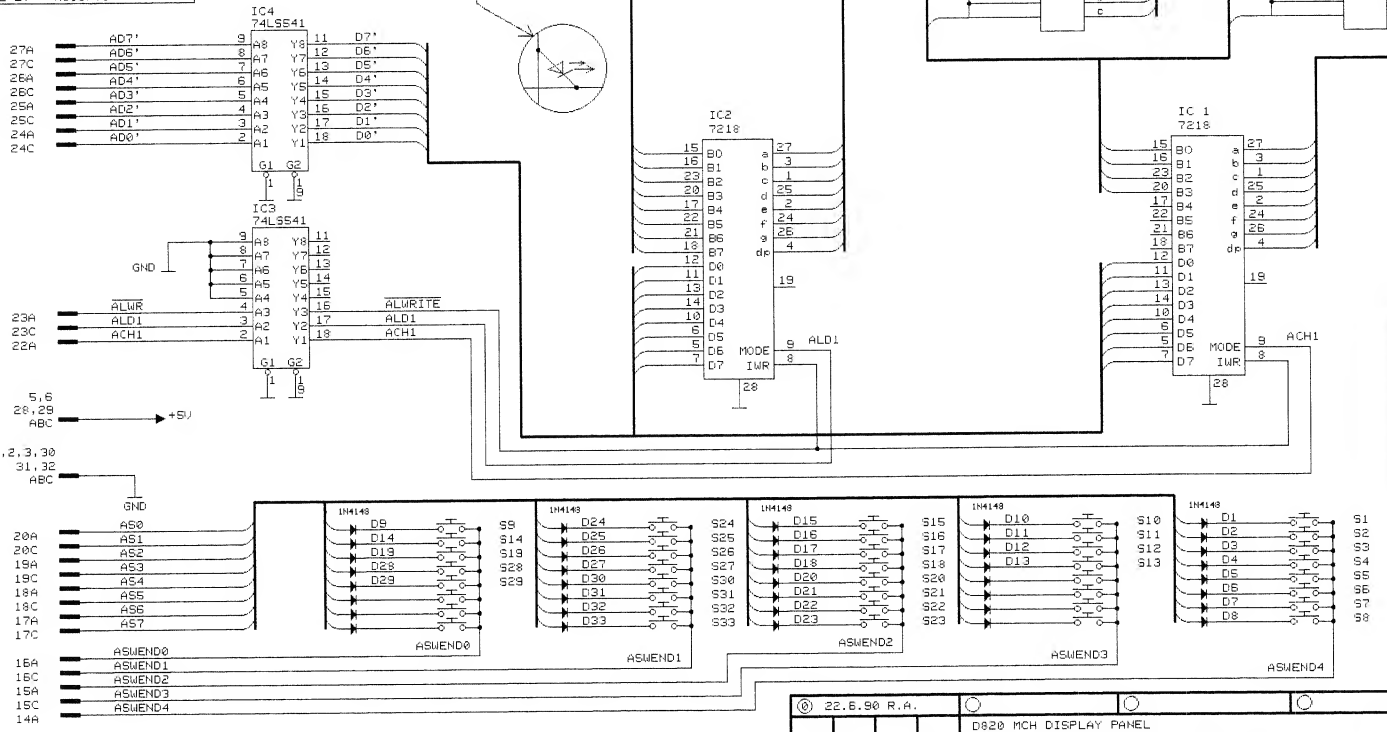

Aux Panel Keys

S01 = Cue1 Safe/Ready
S02 = Cue1 Input/Repro
S03 = Cue2 Safe/Ready
S04 = Cue2 Input/Repro
S05 = TC Safe/Ready
S06 = TC Input/Repro
S07 = Reserve
S08 = Reserve
S09 = All Enable
S10 = User 1
S11 = User 2
S12 = User 3
S13 = User 4
S14 = All Ready
S15 = New Record
S16 = Assembly Record
S17 = Insert Record
S18 = Mute Record
S19 = All Safe
S20 = Ping Pong
S21 = Master Safe
S22 = Rehearse
S23 = Set Enable
S24 = Channel On
S25 = Channel Off
S26 = Emphasis On
S27 = Emphasis Off
S28 = All Input
S29 = All Repro
S30 = Peak Hold
S31 = Peak Reset
S32 = Auto Input
S33 = Auto Mute

© 22.6.90 R.A.			PAGE 1 OF 1
	D820 MCH DISPLAY PANEL		
STUDER	DP AUXILIARY KEYS	SC	1.862.811.00

DP AUX KEYS 1.862.811.00

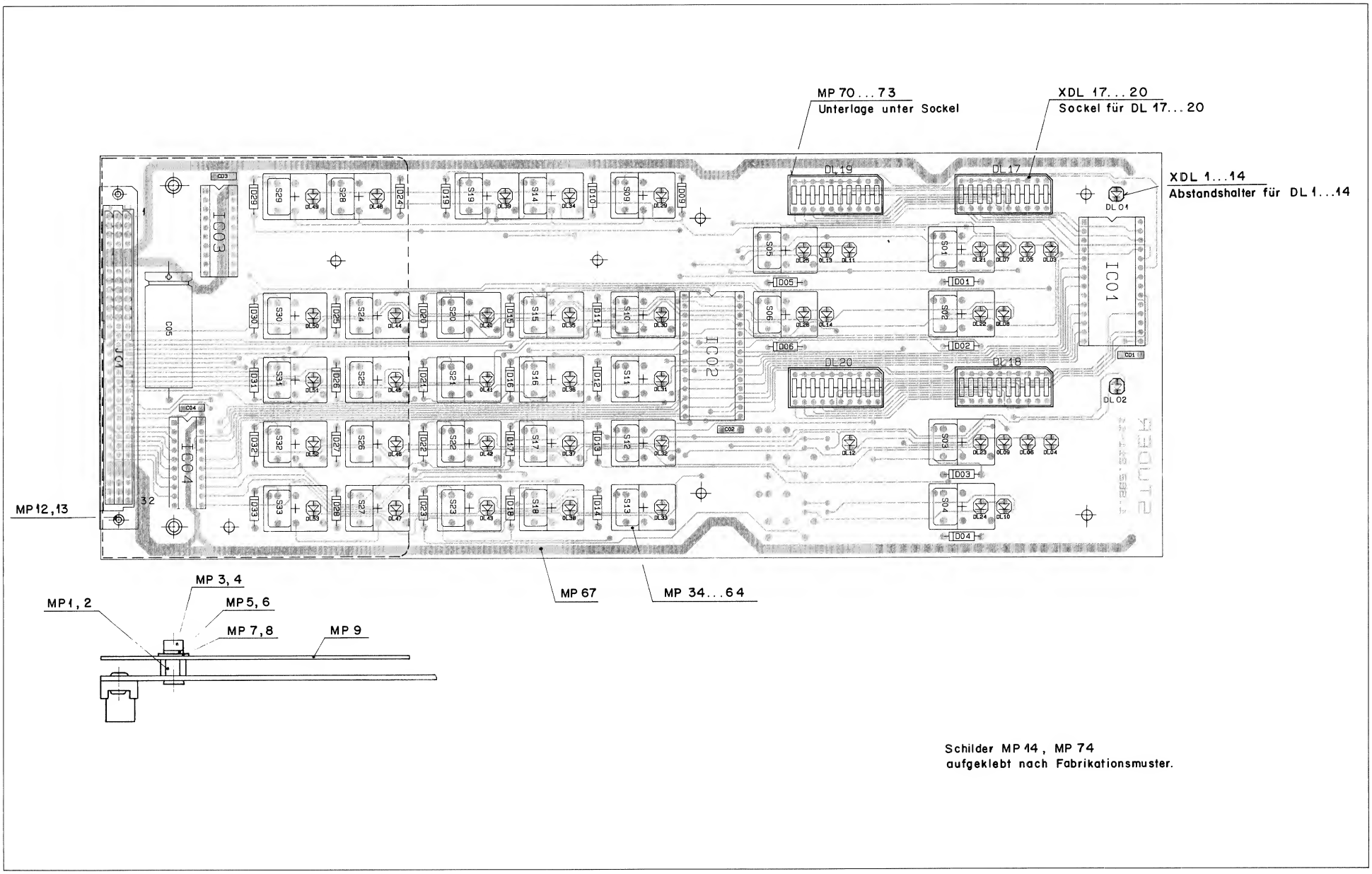

Schilder MP 14, MP 74
aufgeklebt nach Fabrikationsmuster.

DP AUX KEYS 1.862.811.00

IND.	POS.NO.	PART NO.	VALUE	SPECIFICATIONS / EQUIVALENT	MANUF.
	C.....1	59.06.0683	68nF	10%, 63V	ANY
	C.....2	59.06.0683	68nF	10%, 63V	ANY
	C.....3	59.06.0683	68nF	10%, 63V	ANY
	C.....4	59.06.0683	68nF	10%, 63V	ANY
	C.....5	59.25.3102	1000uF	20%, 16V	ANY
	D.....1	50.04.0125		1N 4448	ANY
	D.....2	50.04.0125		1N 4448	ANY
	D.....3	50.04.0125		1N 4448	ANY
	D.....4	50.04.0125		1N 4448	ANY
	D.....5	50.04.0125		1N 4448	ANY
	D.....6	50.04.0125		1N 4448	ANY
	D.....9	50.04.0125		1N 4448	ANY
	D....10	50.04.0125		1N 4448	ANY
	D....11	50.04.0125		1N 4448	ANY
	D....12	50.04.0125		1N 4448	ANY
	D....13	50.04.0125		1N 4448	ANY
	D....14	50.04.0125		1N 4448	ANY
	D....15	50.04.0125		1N 4448	ANY
	D....16	50.04.0125		1N 4448	ANY
	D....17	50.04.0125		1N 4448	ANY
	D....18	50.04.0125		1N 4448	ANY
	D....19	50.04.0125		1N 4448	ANY
	D....20	50.04.0125		1N 4448	ANY
	D....21	50.04.0125		1N 4448	ANY
	D....22	50.04.0125		1N 4448	ANY
	D....23	50.04.0125		1N 4448	ANY
	D....24	50.04.0125		1N 4448	ANY
	D....25	50.04.0125		1N 4448	ANY
	D....26	50.04.0125		1N 4448	ANY
	D....27	50.04.0125		1N 4448	ANY
	D....28	50.04.0125		1N 4448	ANY
	D....29	50.04.0125		1N 4448	ANY
	D....30	50.04.0125		1N 4448	ANY
	D....31	50.04.0125		1N 4448	ANY
	D....32	50.04.0125		1N 4448	ANY
	D....33	50.04.0125		1N 4448	ANY

S T U D E R (02) 90/09/06 LAR DP AUXILIARY KEYS PL 1.862.811.00 PAGE 1

IND.	POS.NO.	PART NO.	VALUE	SPECIFICATIONS / EQUIVALENT	MANUF.
	DL....1	50.04.2156		HLMP 3750 (RED)	ANY
	DL....2	50.04.2156		HLMP 3750 (RED)	ANY
(01)	DL....1	50.04.2129		LS 3360 (RED)	ANY
(01)	DL....2	50.04.2129		LS 3360 (RED)	ANY
	DL....3	50.04.2129		LS 3360 (RED)	ANY
	DL....4	50.04.2129		LS 3360 (RED)	ANY
	DL....5	50.04.2162		HLMP 1540 (GREEN)	HP
	DL....6	50.04.2162		HLMP 1540 (GREEN)	HP
	DL....7	50.04.2162		HLMP 1540 (GREEN)	HP
	DL....8	50.04.2152		HLMP 1440 (YELLOW)	HP
	DL....9	50.04.2162		HLMP 1540 (GREEN)	HP
	DL...10	50.04.2152		HLMP 1440 (YELLOW)	HP
	DL...11	50.04.2129		LS 3360 (RED)	ANY
	DL...12	50.04.2129		LS 3360 (RED)	ANY
	DL...13	50.04.2162		HLMP 1540 (GREEN)	HP
	DL...14	50.04.2152		HLMP 1440 (YELLOW)	HP
	DL...17	50.04.2150		BAR GRAPH (RED)	ANY
	DL...18	50.04.2150		BAR GRAPH (RED)	ANY
	DL...19	50.04.2150		BAR GRAPH (RED)	ANY
	DL...20	50.04.2150		BAR GRAPH (RED)	ANY
	DL...21	50.04.2152		HLMP 1440 (YELLOW)	HP
	DL...22	50.04.2152		HLMP 1440 (YELLOW)	HP
	DL...23	50.04.2152		HLMP 1440 (YELLOW)	HP
	DL...24	50.04.2152		HLMP 1440 (YELLOW)	HP
	DL...25	50.04.2152		HLMP 1440 (YELLOW)	HP
	DL...26	50.04.2152		HLMP 1440 (YELLOW)	HP
	DL...30	50.04.2152		HLMP 1440 (YELLOW)	HP
	DL...31	50.04.2152		HLMP 1440 (YELLOW)	HP
	DL...32	50.04.2152		HLMP 1440 (YELLOW)	HP
	DL...33	50.04.2152		HLMP 1440 (YELLOW)	HP
	DL...34	50.04.2162		HLMP 1540 (GREEN)	HP
	DL...35	50.04.2152		HLMP 1440 (YELLOW)	HP
	DL...36	50.04.2152		HLMP 1440 (YELLOW)	HP
	DL...37	50.04.2152		HLMP 1440 (YELLOW)	HP
	DL...38	50.04.2152		HLMP 1440 (YELLOW)	HP
	DL...39	50.04.2152		HLMP 1440 (YELLOW)	HP
	DL...40	50.04.2152		HLMP 1440 (YELLOW)	HP

S T U D E R (02) 90/09/06 LAR DP AUXILIARY KEYS PL 1.862.811.00 PAGE 2

IND.	POS.NO.	PART NO.	VALUE	SPECIFICATIONS / EQUIVALENT	MANUF.
	DL...41	50.04.2152		HLMP 1440 (YELLOW)	HP
	DL...42	50.04.2152		HLMP 1440 (YELLOW)	HP
	DL...44	50.04.2152		HLMP 1440 (YELLOW)	HP
	DL...45	50.04.2152		HLMP 1440 (YELLOW)	HP
	DL...46	50.04.2152		HLMP 1440 (YELLOW)	HP
	DL...47	50.04.2152		HLMP 1440 (YELLOW)	HP
	DL...48	50.04.2152		HLMP 1440 (YELLOW)	HP
	DL...49	50.04.2152		HLMP 1440 (YELLOW)	HP
	DL...50	50.04.2152		HLMP 1440 (YELLOW)	HP
	DL...52	50.04.2152		HLMP 1440 (YELLOW)	HP
	DL...53	50.04.2152		HLMP 1440 (YELLOW)	HP
	IC....1	50.07.0035		ICM 7218 AIJI	ANY
	IC....2	50.07.0035		ICM 7218 AIJI	ANY
	IC....3	50.06.0541		SN 74 LS 541 N	ANY
	IC....4	50.06.0541		SN 74 LS 541 N	ANY
	J.....1	54.11.2024		CONNECTOR 3 * 32	ANY
	MP....1	1.010.041.22		NIETMUTTER M3	ANY
	MP....2	1.010.041.22		NIETMUTTER M3	ANY
	MP....3	21.53.0354		Z-SCHRAUBE M3 * 6	ANY
	MP....4	21.53.0354		Z-SCHRAUBE M3 * 6	ANY
	MP....5	24.16.1030		RIPPENSCHEIBE M3	ANY
	MP....6	24.16.1030		RIPPENSCHEIBE M3	ANY
	MP....7	23.01.3032		U-SCHEIBE D3.2 / 5.5	ANY
	MP....8	23.01.3032		U-SCHEIBE D3.2 / 5.5	ANY
	MP....9	1.862.800.12		HALTE - FOLIE	ST
(00)	MP...12	28.99.0119		RIVETING NUT	ANY
(01)	MP...12	28.21.1370		RIVETING NUT	ANY
(00)	MP...13	28.99.0119		RIVETING NUT	ANY
(01)	MP...13	28.21.1370		RIVETING NUT	ANY
	MP...14	1.862.811.01		ETIK. PRINT.NR	ANY
	MP...34	55.15.0510		BUTTON SW	ANY
(00)	MP...35	55.15.0510		BUTTON SW	ANY
(02)	MP...35	55.15.0519		BUTTON WS	ANY
	MP...36	55.15.0510		BUTTON SW	ANY

S T U D E R (02) 90/09/06 LAR DP AUXILIARY KEYS PL 1.862.811.00 PAGE 3

IND.	POS.NO.	PART NO.	VALUE	SPECIFICATIONS / EQUIVALENT	MANUF.
(00)	MP...37	55.15.0510		BUTTON SW	ANY
(02)	MP...37	55.15.0519		BUTTON WS	ANY
	MP...38	55.15.0510		BUTTON SW	ANY
(00)	MP...39	55.15.0510		BUTTON SW	ANY
(02)	MP...39	55.15.0519		BUTTON WS	ANY
	MP...40	55.15.0510		BUTTON SW	ANY
(00)	MP...41	55.15.0510		BUTTON SW	ANY
(02)	MP...41	55.15.0518		BUTTON GR	ANY
(00)	MP...42	55.15.0510		BUTTON SW	ANY
(02)	MP...42	55.15.0518		BUTTON GR	ANY
(00)	MP...43	55.15.0510		BUTTON SW	ANY
(02)	MP...43	55.15.0518		BUTTON GR	ANY
(00)	MP...44	55.15.0510		BUTTON SW	ANY
(02)	MP...44	55.15.0518		BUTTON GR	ANY
(00)	MP...45	55.15.0510		BUTTON SW	ANY
(02)	MP...45	55.15.0515		BUTTON GN	ANY
	MP...46	55.15.0510		BUTTON SW	ANY
	MP...47	55.15.0510		BUTTON SW	ANY
	MP...48	55.15.0510		BUTTON SW	ANY
	MP...49	55.15.0510		BUTTON SW	ANY
	MP...50	55.15.0510		BUTTON SW	ANY
	MP...51	55.15.0510		BUTTON SW	ANY
	MP...52	55.15.0510		BUTTON SW	ANY
(00)	MP...53	55.15.0510		BUTTON SW	ANY
(02)	MP...53	55.15.0513		BUTTON OR	ANY
(00)	MP...54	55.15.0510		BUTTON SW	ANY
(02)	MP...54	55.15.0512		BUTTON RT	ANY
	MP...55	55.15.0510		BUTTON SW	ANY
	MP...56	55.15.0510		BUTTON SW	ANY
	MP...57	55.15.0510		BUTTON SW	ANY
	MP...58	55.15.0510		BUTTON SW	ANY
(00)	MP...59	55.15.0510		BUTTON SW	ANY
(02)	MP...59	55.15.0516		BUTTON BL	ANY
(00)	MP...60	55.15.0510		BUTTON SW	ANY
(02)	MP...60	55.15.0519		BUTTON WS	ANY
	MP...61	55.15.0510		BUTTON SW	ANY
	MP...62	55.15.0510		BUTTON SW	ANY

S T U D E R (02) 90/09/06 LAR DP AUXILIARY KEYS PL 1.862.811.00 PAGE 4

IND.	POS.NO.	PART NO.	VALUE	SPECIFICATIONS / EQUIVALENT	MANUF.
	MP...63	55.15.0510		BUTTON SW	ANY
	MP...64	55.15.0510		BUTTON SW	ANY
	MP...67	1.862.811.11		PCB	ST
	MP...70	1.862.811.02		UNTERLAGE BARGRAPH	ST
	MP...71	1.862.811.02		UNTERLAGE BARGRAPH	ST
	MP...72	1.862.811.02		UNTERLAGE BARGRAPH	ST
	MP...73	1.862.811.02		UNTERLAGE BARGRAPH	ST
	MP...74	43.01.0108		ESE-WARNSCHILD	ANY
	S.....1	55.15.0501		KEY	ANY
	S.....2	55.15.0501		KEY	ANY
	S.....3	55.15.0501		KEY	ANY
	S.....4	55.15.0501		KEY	ANY
	S.....5	55.15.0501		KEY	ANY
	S.....6	55.15.0501		KEY	ANY
	S.....9	55.15.0501		KEY	ANY
	S....10	55.15.0501		KEY	ANY
	S....11	55.15.0501		KEY	ANY
	S....12	55.15.0501		KEY	ANY
	S....13	55.15.0501		KEY	ANY
	S....14	55.15.0501		KEY	ANY
	S....15	55.15.0501		KEY	ANY
	S....16	55.15.0501		KEY	ANY
	S....17	55.15.0501		KEY	ANY
	S....18	55.15.0501		KEY	ANY
	S....19	55.15.0501		KEY	ANY
	S....20	55.15.0501		KEY	ANY
	S....21	55.15.0501		KEY	ANY
	S....22	55.15.0501		KEY	ANY
	S....23	55.15.0501		KEY	ANY
	S....24	55.15.0501		KEY	ANY
	S....25	55.15.0501		KEY	ANY
	S....26	55.15.0501		KEY	ANY
	S....27	55.15.0501		KEY	ANY
	S....28	55.15.0501		KEY	ANY
	S....29	55.15.0501		KEY	ANY
	S....30	55.15.0501		KEY	ANY

S T U D E R (02) 90/09/06 LAR DP AUXILIARY KEYS PL 1.862.811.00 PAGE 5

IND.	POS.NO.	PART NO.	VALUE	SPECIFICATIONS / EQUIVALENT	MANUF.
	S....31	55.15.0501		KEY	ANY
	S....32	55.15.0501		KEY	ANY
	S....33	55.15.0501		KEY	ANY
	XDL...1	1.862.813.03		LED - ABSTANDSHALTER	ANY
	XDL...2	1.862.813.03		LED - ABSTANDSHALTER	ANY
	XDL...3	1.862.813.03		LED - ABSTANDSHALTER	ANY
	XDL...4	1.862.813.03		LED - ABSTANDSHALTER	ANY
	XDL...5	1.862.813.03		LED - ABSTANDSHALTER	ANY
	XDL...6	1.862.813.03		LED - ABSTANDSHALTER	ANY
	XDL...7	1.862.813.03		LED - ABSTANDSHALTER	ANY
	XDL...8	1.862.813.03		LED - ABSTANDSHALTER	ANY
	XDL...9	1.862.813.03		LED - ABSTANDSHALTER	ANY
	XDL..10	1.862.813.03		LED - ABSTANDSHALTER	ANY
	XDL..11	1.862.813.03		LED - ABSTANDSHALTER	ANY
	XDL..12	1.862.813.03		LED - ABSTANDSHALTER	ANY
	XDL..13	1.862.813.03		LED - ABSTANDSHALTER	ANY
	XDL..14	1.862.813.03		LED - ABSTANDSHALTER	ANY
	XDL..17	53.99.0125		DIL 20-POL (SPECIAL)	AMP
	XDL..18	53.99.0125		DIL 20-POL (SPECIAL)	AMP
	XDL..19	53.99.0125		DIL 20-POL (SPECIAL)	AMP
	XDL..20	53.99.0125		DIL 20-POL (SPECIAL)	AMP

REMARKS: (01) 22.01.90 RU DL1,2; MP12,13
(02) 06.09.90 LAR MP 34-64

MANUFACTURERS:
ST = STUDER PH = PHILIPS HP = HEWLETT PACKARD

ABBREVIATIONS:
CER = CERAMIC / FILM = FILM TYPE / XF = CLAMP FOR FUSES /
XIC = IC SOCKET

ORIG 89/07/05 (01) 90/01/22 (02) 90/09/06

S T U D E R (02) 90/09/06 LAR DP AUXILIARY KEYS PL 1.862.811.00 PAGE 6

DP AUX KEY DETECTION 1.862.812.00

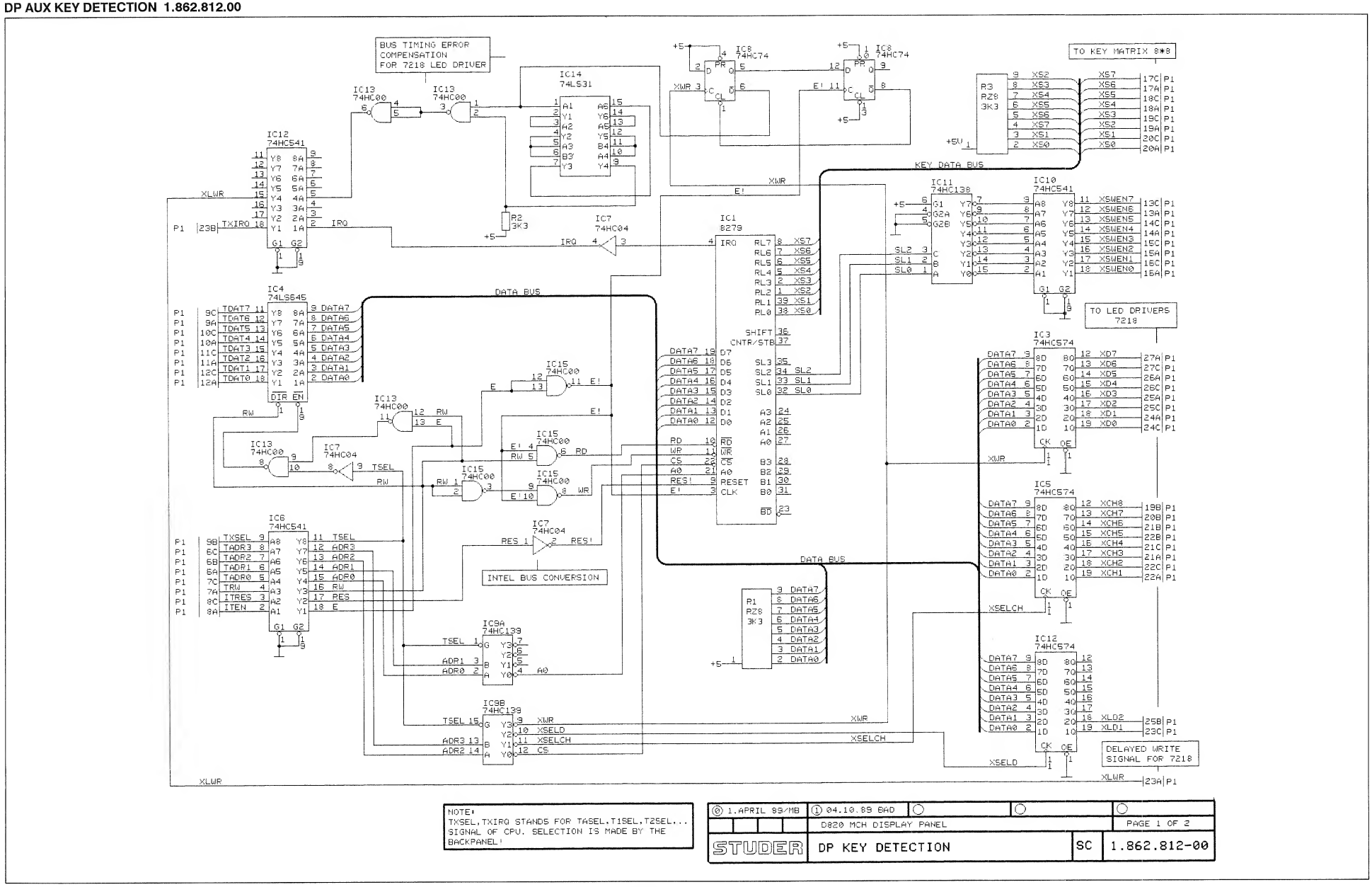

NOTE:
TXSEL,TXIRQ STANDS FOR TASEL,T1SEL,T2SEL,...
SIGNAL OF CPU. SELECTION IS MADE BY THE
BACKPANEL!

⓪ 1.APRIL 89/MB	① 04.10.89 BAD		
	D820 MCH DISPLAY PANEL		PAGE 1 OF 2
STUDER	DP KEY DETECTION	SC	1.862.812-00

DP AUX KEY DETECTION 1.862.812.00

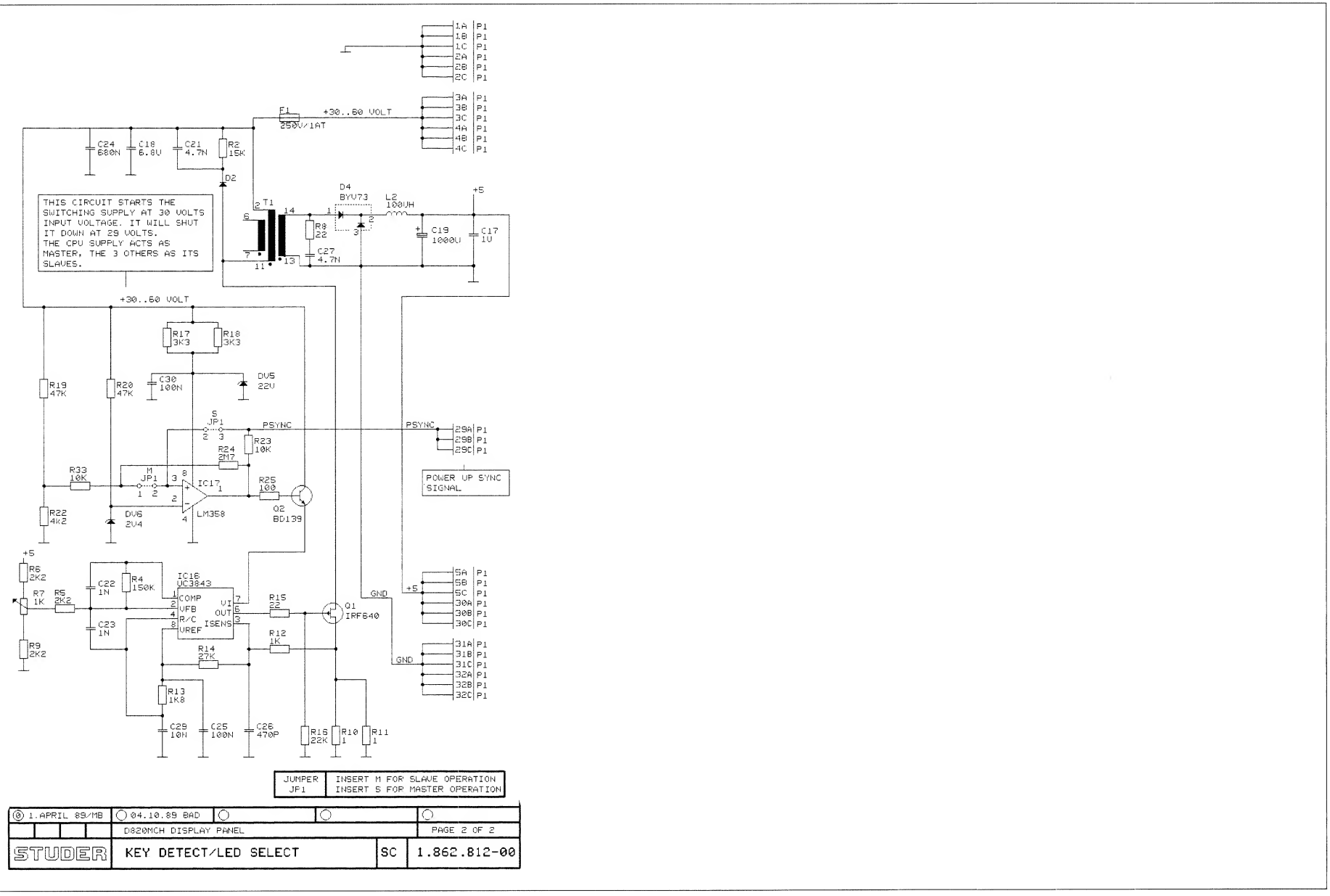

DP AUX KEY DETECTION 1.862.812.00

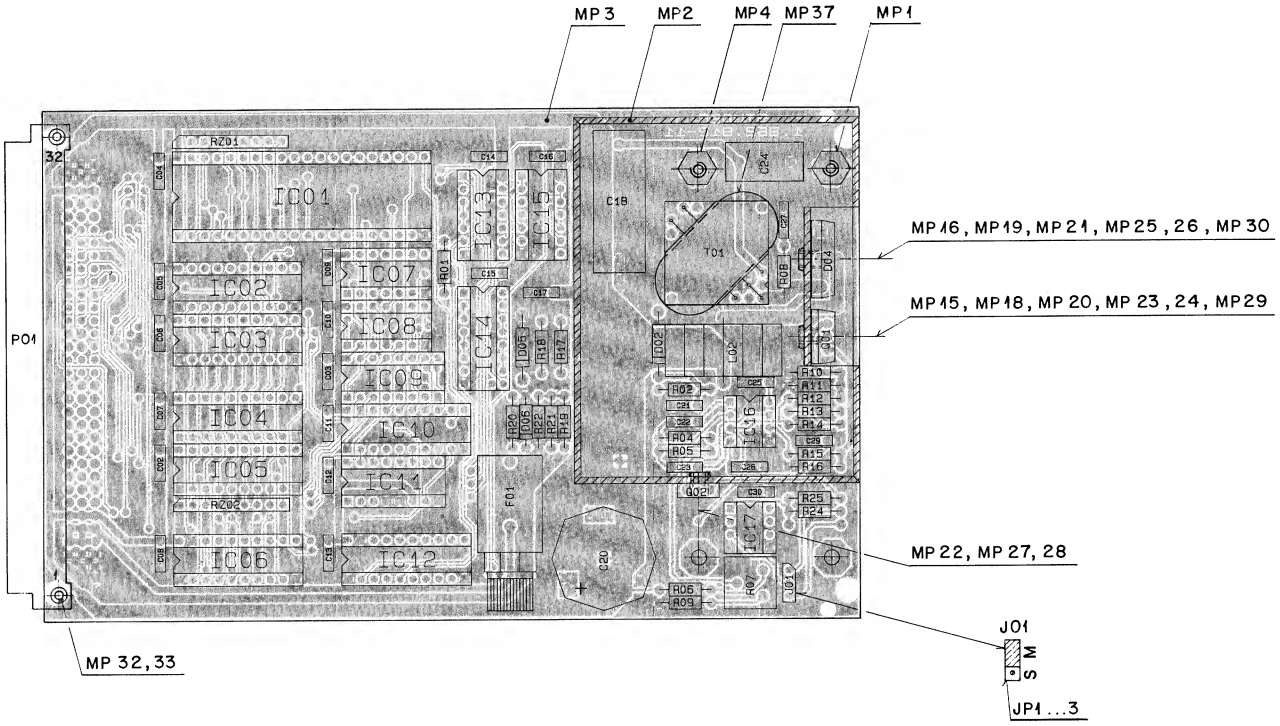

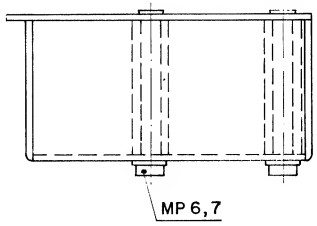

Schilder MP 34,35,36
aufgeklebt nach Fabrikationsmuster.

IND.	POS.NO.	PART NO.	VALUE	SPECIFICATIONS / EQUIVALENT	MANUF.
	C....2	59.06.0683	68nF	10%, 63V	ANY
	C....3	59.06.0683	68nF	10%, 63V	ANY
	C....4	59.06.0683	68nF	10%, 63V	ANY
	C....5	59.06.0683	68nF	10%, 63V	ANY
	C....6	59.06.0683	68nF	10%, 63V	ANY
	C....7	59.06.0683	68nF	10%, 63V	ANY
	C....8	59.06.0683	68nF	10%, 63V	ANY
	C....9	59.06.0683	68nF	10%, 63V	ANY
	C....10	59.06.0683	68nF	10%, 63V	ANY
	C....11	59.06.0683	68nF	10%, 63V	ANY
	C....12	59.06.0683	68nF	10%, 63V	ANY
	C....13	59.06.0683	68nF	10%, 63V	ANY
	C....14	59.06.0683	68nF	10%, 63V	ANY
	C....15	59.06.0683	68nF	10%, 63V	ANY
	C....16	59.06.0683	68nF	10%, 63V	ANY
	C....17	59.06.0105	1uF	10%, 50V, PETP	ANY
	C....18	59.02.0685	6.8uF	10%, 63V, MPC	ANY
	C....20	59.28.2222	2200uF	20%, 16V	ANY
	C....21	59.32.2472	4.7nF	10%, 50V, CER	ANY
	C....22	59.06.0102	1nF	10%, 63V, PETP	ANY
	C....23	59.06.0102	1nF	10%, 63V, PETP	ANY
	C....24	59.02.0684	680nF	5%, 63V, MPC	ANY
	C....25	59.06.0104	100nF	10%, 63V, PETP	ANY
	C....26	59.32.2471	470pF	20%, 50V, CER	ANY
	C....27	59.32.2472	4.7nF	20%, 50V, CER	ANY
	C....29	59.06.0103	10nF	10%, 63V, PETP	ANY
	C....30	59.06.0104	100nF	10%, 63V, PETP	ANY
	D....2	50.04.0138		UF 4004	ANY
	D....4	50.04.0520		BYV 73	Ph
	D....5	50.04.1224		Z-DIODE 22V 1.3W	ANY
	D....6	50.04.1131		Z-DIODE 2.4V 500mW	ANY
	F.....1	51.01.0117		FUSE, T 1A/250V, 5x20mm	ANY
	IC....1	50.16.0111		MSL 8279 P-5	ANY
	IC....2	50.17.1574		74 HC 574	ANY

S T U D E R (02) 90/06/11 LAR DP AUX KEY DETECTION PL 1.862.812.00 PAGE 1

IND.	POS.NO.	PART NO.	VALUE	SPECIFICATIONS / EQUIVALENT	MANUF.
	IC....3	50.17.1574		74 HC 574	ANY
	IC....4	50.06.1645		74 LS 645	ANY
	IC....5	50.17.1574		74 HC 574	ANY
	IC....6	50.17.1541		74 HC 541	ANY
	IC....7	50.17.1004		74 HC 04	ANY
	IC....8	50.17.1074		74 HC 74	ANY
	IC....9	50.17.1139		74 HC 139	ANY
	IC...10	50.17.1541		74 HC 541	ANY
	IC...11	50.17.1138		74 HC 138	ANY
	IC...12	50.17.1541		74 HC 541	ANY
	IC...13	50.17.1000		74 HC 00	ANY
	IC...14	50.06.0031		74 LS 31	ANY
	IC...15	50.17.1000		74 HC 00	ANY
	IC...16	50.10.0113		UC 3843	ANY
	IC...17	50.05.0206		LM 358	ANY
	J.....1	54.01.0021		JUMPER CONNECTOR	ANY
	JP....1	54.01.0020		JUMPER PIN	ANY
	JP....2	54.01.0020		JUMPER PIN	ANY
	JP....3	54.01.0020		JUMPER PIN	ANY
	L.....2	62.03.0040		TOROIDAL CHOKE 100uH, 5A	ANY
(00)	MP....1	1.010.025.27		M3 X 25MM BOLZEN	ANY
(02)	MP....1	1.010.022.22		M3 X 25MM MIETMUTTER	ANY
	MP....2	1.862.812.02		SCREEN	ST
	MP....3	1.862.812.11		PCB	ST
(00)	MP....4	1.010.025.27		M3 X 25MM BOLZEN	ANY
(02)	MP....4	1.010.022.22		M3 X 25MM MIETMUTTER	ANY
(00)	MP....6	21.51.8354		LINSENSCHRAUBE M3 X 6MM	ANY
(02)	MP....6	21.53.9354		Z-SCHRAUBE M. SICH. M3 X 6MM	ANY
(00)	MP....7	21.51.8354		LINSENSCHRAUBE M3 X 6MM	ANY
(02)	MP....7	21.53.9354		Z-SCHRAUBE M. SICH. M3 X 6MM	ANY
(00)	MP....8	21.51.8354		LINSENSCHRAUBE M3 X 6MM	ANY
(02)	MP....8			NOT USED	ANY
(00)	MP....9	21.51.8354		LINSENSCHRAUBE M3 X 6MM	ANY

S T U D E R (02) 90/06/11 LAR DP AUX KEY DETECTION PL 1.862.812.00 PAGE 2

IND.	POS.NO.	PART NO.	VALUE	SPECIFICATIONS / EQUIVALENT	MANUF.
(02)	MP....9			NOT USED	ANY
(00)	MP...10	24.16.1030		RIPPENSCHEIBE M3	ANY
(02)	MP...10			NOT USED	ANY
(00)	MP...11	24.16.1030		RIPPENSCHEIBE M3	ANY
(02)	MP...11			NOT USED	ANY
(00)	MP...12	24.16.1030		RIPPENSCHEIBE M3	ANY
(02)	MP...12			NOT USED	ANY
(00)	MP...13	24.16.1030		RIPPENSCHEIBE M3	ANY
(02)	MP...13			NOT USED	ANY
	MP...15	50.20.0303		GLIMMER TO220	ANY
	MP...16	50.20.0317		GLIMMER TO218	ANY
(00)	MP...17	50.20.0314		GLIMMER TO126	ANY
(01)	MP...17	50.20.0310		GLIMMER TO126	ANY
	MP...18	50.20.0404		ISOL. DURCHF.	ANY
	MP...19	50.20.0404		ISOL. DURCHF.	ANY
(00)	MP...20	21.53.0357		M3 X 12 INNENSECHSKANT.	ANY
(01)	MP...20	21.53.0356		M3 X 12 INNENSECHSKANT.	ANY
(00)	MP...21	21.53.0357		M3 X 12 INNENSECHSKANT.	ANY
(01)	MP...21	21.53.0356		M3 X 12 INNENSECHSKANT.	ANY
	MP...22	21.53.0354		M3 X 6 INNENSECHSKANT.	ANY
	MP...23	37.01.0101		FEDERSCHEIBE M3	ANY
	MP...24	37.01.0101		FEDERSCHEIBE M3	ANY
	MP...25	37.01.0101		FEDERSCHEIBE M3	ANY
	MP...26	37.01.0101		FEDERSCHEIBE M3	ANY
	MP...27	37.01.0101		FEDERSCHEIBE M3	ANY
	MP...28	37.01.0101		FEDERSCHEIBE M3	ANY
	MP...29	1.010.098.27		DIST. BOLZEN 2/3mm	ST
	MP...30	1.010.098.27		DIST. BOLZEN 2/3mm	ST
(00)	MP...31	23.01.0132		U-SCHEIBE M3	ANY
(01)	MP...31			NOT USED	ANY
	MP...32	28.99.0119		RIVETING NUT	ST
	MP...33	28.99.0119		RIVETING NUT	ST
	MP...34	43.01.0108		ESE-WARNSCHILD	ANY
	MP...35	1.010.115.51		ETIK. SICHERUNG	ST
	MP...36	1.862.812.01		ETIK. PRINT.NR	ST
	MP...37	1.010.002.61		UNTERLAGE ZU SWITCHING TRAFO	ST

S T U D E R (02) 90/06/11 LAR DP AUX KEY DETECTION PL 1.862.812.00 PAGE 3

IND.	POS.NO.	PART NO.	VALUE	SPECIFICATIONS / EQUIVALENT	MANUF.
	P.....1	54.01.0358		CONNECTOR 3 x 32	ANY
	Q.....1	50.03.1510		IRF 640	St
	Q.....2	50.03.0451		BD 139	ANY
	R.....1	57.11.3332	3.3 k	1%	ANY
	R.....2	57.11.3153	15 k	1%	ANY
	R.....4	57.11.3154	150 k	1%	ANY
	R.....5	57.11.3222	2.2 k	1%	ANY
	R.....6	57.11.3222	2.2 k	1%	ANY
	R.....7	58.01.8102	1 k	10% 0.5W, PMG	ANY
	R.....8	57.11.3220	22 E	1%	ANY
	R.....9	57.11.3222	2.2 k	1%	ANY
	R....10	57.11.3105	1 E	1%	ANY
	R....11	57.11.3105	1 E	1%	ANY
	R....12	57.11.3102	1 k	1%	ANY
	R....13	57.11.3182	1.8 k	1%	ANY
	R....14	57.11.3273	27 k	1%	ANY
	R....15	57.11.3220	22 E	1%	ANY
	R....16	57.11.3223	22 k	1%	ANY
	R....17	57.11.3332	3.3 k	1%	ANY
	R....18	57.11.3332	3.3 k	1%	ANY
	R....19	57.11.3473	47 k	1%	ANY
	R....20	57.11.3473	47 k	1%	ANY
	R....21	57.11.3103	10 k	1%	ANY
	R....22	57.11.3432	4.3 k	1%	ANY
	R....23	57.11.3103	10 k	1%	ANY
	R....24	57.11.5275	2.7 M	1%	ANY
	R....25	57.11.3101	100 E	1%	ANY
	T.....1	1.022.628.00		SWITCHING TRANSFORMER	ST
	XF....2	53.03.0118		FUSEHOLDER	ANY
	Z.....1	57.88.4332		8 x 3k3	ANY
	Z.....2	57.88.4332		8 x 3k3	ANY

S T U D E R (02) 90/06/11 LAR DP AUX KEY DETECTION PL 1.862.812.00 PAGE 4

IND.	POS.NO.	PART NO.	VALUE	SPECIFICATIONS / EQUIVALENT	MANUF.

MANUFACTURERS:
St = STUDER Ph = PHILIPS Si = SILICONIX

ABBREVIATIONS:
CER = CERAMIC / FILM = FILM TYPE / XF = CLAMP FOR FUSES /
XIC = IC SOCKET

ORIG 89/06/16 (01) 89/10/11 (02) 90/06/11

S T U D E R (02) 90/06/11 LAR DP AUX KEY DETECTION PL 1.862.812.00 PAGE 5

DP CHANNEL KEYS + LEVELS 1.862.813.00

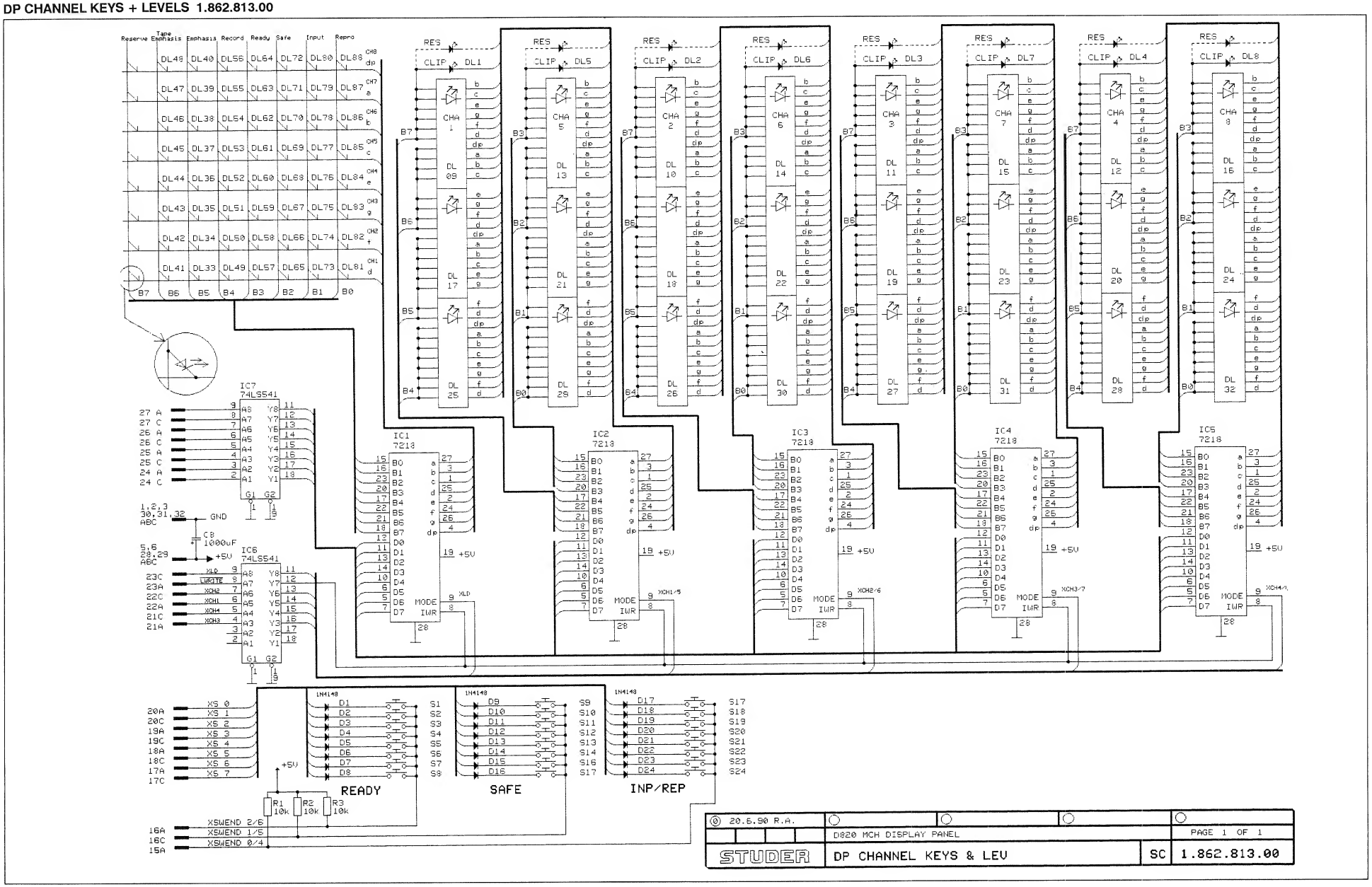

DP CHANNEL KEYS + LEVELS 1.862.813.00

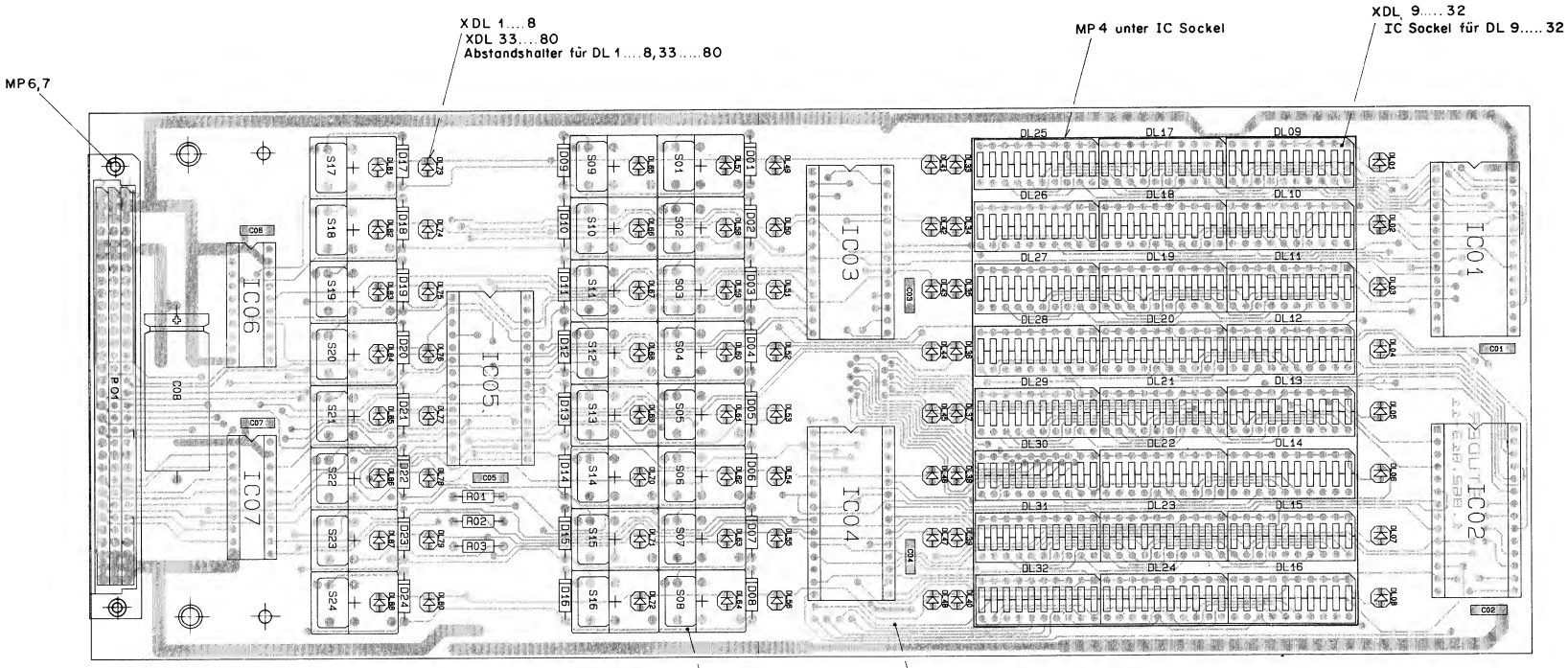

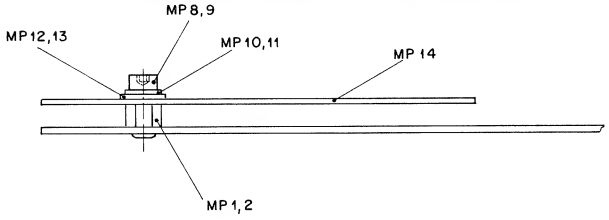

Schilder MP3, MP50
aufgeklebt nach Fabrikationsmuster

IND.	POS.NO.	PART NO.	VALUE	SPECIFICATIONS / EQUIVALENT	MANUF.
	C.....1	59.06.0683		68nF 10% 63V	ANY
	C.....2	59.06.0683		68nF 10% 63V	ANY
	C.....3	59.06.0683		68nF 10% 63V	ANY
	C.....4	59.06.0683		68nF 10% 63V	ANY
	C.....5	59.06.0683		68nF 10% 63V	ANY
	C.....6	59.06.0683		68nF 10% 63V	ANY
	C.....7	59.06.0683		68nF 10% 63V	ANY
	C.....8	59.25.3102		1000uF 20% 16V	ANY
	D.....1	50.04.0125		1N 4448	ANY
	D.....2	50.04.0125		1N 4448	ANY
	D.....3	50.04.0125		1N 4448	ANY
	D.....4	50.04.0125		1N 4448	ANY
	D.....5	50.04.0125		1N 4448	ANY
	D.....6	50.04.0125		1N 4448	ANY
	D.....7	50.04.0125		1N 4448	ANY
	D.....8	50.04.0125		1N 4448	ANY
	D.....9	50.04.0125		1N 4448	ANY
	D....10	50.04.0125		1N 4448	ANY
	D....11	50.04.0125		1N 4448	ANY
	D....12	50.04.0125		1N 4448	ANY
	D....13	50.04.0125		1N 4448	ANY
	D....14	50.04.0125		1N 4448	ANY
	D....15	50.04.0125		1N 4448	ANY
	D....16	50.04.0125		1N 4448	ANY
	D....17	50.04.0125		1N 4448	ANY
	D....18	50.04.0125		1N 4448	ANY
	D....19	50.04.0125		1N 4448	ANY
	D....20	50.04.0125		1N 4448	ANY
	D....21	50.04.0125		1N 4448	ANY
	D....22	50.04.0125		1N 4448	ANY
	D....23	50.04.0125		1N 4448	ANY
	D....24	50.04.0125		1N 4448	ANY
	DL....1	50.04.2129		LS 3160 (RED)	ANY
	DL....2	50.04.2129		LS 3160 (RED)	ANY
	DL....3	50.04.2129		LS 3160 (RED)	ANY

S T U D E R (01) 90/09/06 LAR DP CHANNEL LEVELS + KEYS FL 1.862.813.00 PAGE 1

IND.	POS.NO.	PART NO.	VALUE	SPECIFICATIONS / EQUIVALENT	MANUF.
	DL....4	50.04.2129		LS 3160 (RED)	ANY
	DL....5	50.04.2129		LS 3160 (RED)	ANY
	DL....6	50.04.2129		LS 3160 (RED)	ANY
	DL....7	50.04.2129		LS 3160 (RED)	ANY
	DL....8	50.04.2129		LS 3160 (RED)	ANY
	DL....9	50.04.2150		BAR GRAPH (RED)	ANY
	DL...10	50.04.2150		BAR GRAPH (RED)	ANY
	DL...11	50.04.2150		BAR GRAPH (RED)	ANY
	DL...12	50.04.2150		BAR GRAPH (RED)	ANY
	DL...13	50.04.2150		BAR GRAPH (RED)	ANY
	DL...14	50.04.2150		BAR GRAPH (RED)	ANY
	DL...15	50.04.2150		BAR GRAPH (RED)	ANY
	DL...16	50.04.2150		BAR GRAPH (RED)	ANY
	DL...17	50.04.2150		BAR GRAPH (RED)	ANY
	DL...18	50.04.2150		BAR GRAPH (RED)	ANY
	DL...19	50.04.2150		BAR GRAPH (RED)	ANY
	DL...20	50.04.2150		BAR GRAPH (RED)	ANY
	DL...21	50.04.2150		BAR GRAPH (RED)	ANY
	DL...22	50.04.2150		BAR GRAPH (RED)	ANY
	DL...23	50.04.2150		BAR GRAPH (RED)	ANY
	DL...24	50.04.2150		BAR GRAPH (RED)	ANY
	DL...25	50.04.2150		BAR GRAPH (RED)	ANY
	DL...26	50.04.2150		BAR GRAPH (RED)	ANY
	DL...27	50.04.2150		BAR GRAPH (RED)	ANY
	DL...28	50.04.2150		BAR GRAPH (RED)	ANY
	DL...29	50.04.2150		BAR GRAPH (RED)	ANY
	DL...30	50.04.2150		BAR GRAPH (RED)	ANY
	DL...31	50.04.2150		BAR GRAPH (RED)	ANY
	DL...32	50.04.2150		BAR GRAPH (RED)	ANY
	DL...33	50.04.2129		LS 3160 (RED)	ANY
	DL...34	50.04.2129		LS 3160 (RED)	ANY
	DL...35	50.04.2129		LS 3160 (RED)	ANY
	DL...36	50.04.2129		LS 3160 (RED)	ANY
	DL...37	50.04.2129		LS 3160 (RED)	ANY
	DL...38	50.04.2129		LS 3160 (RED)	ANY
	DL...39	50.04.2129		LS 3160 (RED)	ANY
	DL...40	50.04.2129		LS 3160 (RED)	ANY

S T U D E R (01) 90/09/06 LAR DP CHANNEL LEVELS + KEYS FL 1.862.813.00 PAGE 2

DP CHANNEL KEYS + LEVELS 1.862.813.00

IND.	POS.NO.	PART NO.	VALUE	SPECIFICATIONS / EQUIVALENT		MANUF.
	DL...41	50.04.2152		HLMP 1440	(YELLOW)	HP
	DL...42	50.04.2152		HLMP 1440	(YELLOW)	HP
	DL...43	50.04.2152		HLMP 1440	(YELLOW)	HP
	DL...44	50.04.2152		HLMP 1440	(YELLOW)	HP
	DL...45	50.04.2152		HLMP 1440	(YELLOW)	HP
	DL...46	50.04.2152		HLMP 1440	(YELLOW)	HP
	DL...47	50.04.2152		HLMP 1440	(YELLOW)	HP
	DL...48	50.04.2152		HLMP 1440	(YELLOW)	HP
	DL...49	50.04.2129		LS 3160	(RED)	ANY
	DL...50	50.04.2129		LS 3160	(RED)	ANY
	DL...51	50.04.2129		LS 3160	(RED)	ANY
	DL...52	50.04.2129		LS 3160	(RED)	ANY
	DL...53	50.04.2129		LS 3160	(RED)	ANY
	DL...54	50.04.2129		LS 3160	(RED)	ANY
	DL...55	50.04.2129		LS 3160	(RED)	ANY
	DL...56	50.04.2129		LS 3160	(RED)	ANY
	DL...57	50.04.2162		HLMP 1540	(GREEN)	HP
	DL...58	50.04.2162		HLMP 1540	(GREEN)	HP
	DL...59	50.04.2162		HLMP 1540	(GREEN)	HP
	DL...60	50.04.2162		HLMP 1540	(GREEN)	HP
	DL...61	50.04.2162		HLMP 1540	(GREEN)	HP
	DL...62	50.04.2162		HLMP 1540	(GREEN)	HP
	DL...63	50.04.2162		HLMP 1540	(GREEN)	HP
	DL...64	50.04.2162		HLMP 1540	(GREEN)	HP
	DL...65	50.04.2152		HLMP 1440	(YELLOW)	HP
	DL...66	50.04.2152		HLMP 1440	(YELLOW)	HP
	DL...67	50.04.2152		HLMP 1440	(YELLOW)	HP
	DL...68	50.04.2152		HLMP 1440	(YELLOW)	HP
	DL...69	50.04.2152		HLMP 1440	(YELLOW)	HP
	DL...70	50.04.2152		HLMP 1440	(YELLOW)	HP
	DL...71	50.04.2152		HLMP 1440	(YELLOW)	HP
	DL...72	50.04.2152		HLMP 1440	(YELLOW)	HP
	DL...73	50.04.2152		HLMP 1440	(YELLOW)	HP
	DL...74	50.04.2152		HLMP 1440	(YELLOW)	HP
	DL...75	50.04.2152		HLMP 1440	(YELLOW)	HP
	DL...76	50.04.2152		HLMP 1440	(YELLOW)	HP
	DL...77	50.04.2152		HLMP 1440	(YELLOW)	HP

S T U D E R (01) 90/09/06 LAR DP CHANNEL LEVELS + KEYS PL 1.862.813.00 PAGE 3

IND.	POS.NO.	PART NO.	VALUE	SPECIFICATIONS / EQUIVALENT		MANUF.
	DL...78	50.04.2152		HLMP 1440	(YELLOW)	HP
	DL...79	50.04.2152		HLMP 1440	(YELLOW)	HP
	DL...80	50.04.2152		HLMP 1440	(YELLOW)	HP
	DL...81	50.04.2152		HLMP 1440	(YELLOW)	HP
	DL...82	50.04.2152		HLMP 1440	(YELLOW)	HP
	DL...83	50.04.2152		HLMP 1440	(YELLOW)	HP
	DL...84	50.04.2152		HLMP 1440	(YELLOW)	HP
	DL...85	50.04.2152		HLMP 1440	(YELLOW)	HP
	DL...86	50.04.2152		HLMP 1440	(YELLOW)	HP
	DL...87	50.04.2152		HLMP 1440	(YELLOW)	HP
	DL...88	50.04.2152		HLMP 1440	(YELLOW)	HP
	IC....1	50.07.0035		ICM 7218 AIJI		ANY
	IC....2	50.07.0035		ICM 7218 AIJI		ANY
	IC....3	50.07.0035		ICM 7218 AIJI		ANY
	IC....4	50.07.0035		ICM 7218 AIJI		ANY
	IC....5	50.07.0035		ICM 7218 AIJI		ANY
	IC....6	50.06.0541		SN 74 LS 541 N		ANY
	IC....7	50.06.0541		SN 74 LS 541 N		ANY
	MP....1	1.010.041.22		NIETMUTTER M3		ANY
	MP....2	1.010.041.22		NIETMUTTER M3		ANY
	MP....3	1.862.813.01		ETIK. PRINT.NR		ST
	MP....4	1.862.813.02		UNTERLAGE ZU BARGRAPH		ST
	MP....6	28.21.1370		RIVETING NUT		ANY
	MP....7	28.21.1370		RIVETING NUT		ANY
	MP....8	21.53.0354		Z-SCHRAUBE M3 * 6		ANY
	MP....9	21.53.0354		Z-SCHRAUBE M3 * 6		ANY
	MP...10	24.16.1030		RIPPENSCHEIBE M3		ANY
	MP...11	24.16.1030		RIPPENSCHEIBE M3		ANY
	MP...12	23.01.3032		U-SCHEIBE d3.2 / 5.5		ANY
	MP...13	23.01.3032		U-SCHEIBE d3.2 / 5.5		ANY
	MP...14	1.862.800.12		HALTE -FOLIE		ST
(00)	MP...25	55.15.0510		BUTTON SW		ANY
(01)	MP...25	55.15.0515		BUTTON GN		ANY
(00)	MP...26	55.15.0510		BUTTON SW		ANY
(01)	MP...26	55.15.0515		BUTTON GN		ANY

S T U D E R (01) 90/09/06 LAR DP CHANNEL LEVELS + KEYS PL 1.862.813.00 PAGE 4

IND.	POS.NO.	PART NO.	VALUE	SPECIFICATIONS / EQUIVALENT		MANUF.
(00)	MP...27	55.15.0510		BUTTON SW		ANY
(01)	MP...27	55.15.0515		BUTTON GN		ANY
(00)	MP...28	55.15.0510		BUTTON SW		ANY
(01)	MP...28	55.15.0515		BUTTON GN		ANY
(00)	MP...29	55.15.0510		BUTTON SW		ANY
(01)	MP...29	55.15.0515		BUTTON GN		ANY
(00)	MP...30	55.15.0510		BUTTON SW		ANY
(01)	MP...30	55.15.0515		BUTTON GN		ANY
(00)	MP...31	55.15.0510		BUTTON SW		ANY
(01)	MP...31	55.15.0515		BUTTON GN		ANY
(00)	MP...32	55.15.0510		BUTTON SW		ANY
(01)	MP...32	55.15.0515		BUTTON GN		ANY
	MP...33	55.15.0510		BUTTON SW		ANY
	MP...34	55.15.0510		BUTTON SW		ANY
	MP...35	55.15.0510		BUTTON SW		ANY
	MP...36	55.15.0510		BUTTON SW		ANY
	MP...37	55.15.0510		BUTTON SW		ANY
	MP...38	55.15.0510		BUTTON SW		ANY
	MP...39	55.15.0510		BUTTON SW		ANY
	MP...40	55.15.0510		BUTTON SW		ANY
(00)	MP...41	55.15.0510		BUTTON SW		ANY
(01)	MP...41	55.15.0519		BUTTON WS		ANY
(00)	MP...42	55.15.0510		BUTTON SW		ANY
(01)	MP...42	55.15.0519		BUTTON WS		ANY
(00)	MP...43	55.15.0510		BUTTON SW		ANY
(01)	MP...43	55.15.0519		BUTTON WS		ANY
(00)	MP...44	55.15.0510		BUTTON SW		ANY
(01)	MP...44	55.15.0519		BUTTON WS		ANY
(00)	MP...45	55.15.0510		BUTTON SW		ANY
(01)	MP...45	55.15.0519		BUTTON WS		ANY
(00)	MP...46	55.15.0510		BUTTON SW		ANY
(01)	MP...46	55.15.0519		BUTTON WS		ANY
(00)	MP...47	55.15.0510		BUTTON SW		ANY
(01)	MP...47	55.15.0519		BUTTON WS		ANY
(00)	MP...48	55.15.0510		BUTTON SW		ANY
(01)	MP...48	55.15.0519		BUTTON WS		ANY
	MP...49	1.862.813.11		PCB		ST

S T U D E R (01) 90/09/06 LAR DP CHANNEL LEVELS + KEYS PL 1.862.813.00 PAGE 5

IND.	POS.NO.	PART NO.	VALUE	SPECIFICATIONS / EQUIVALENT		MANUF.
	MP...50	43.01.0108		ESE-WARNSCHILD		ANY
	P.....1	54.11.2024		CONNECTOR 3 * 32		ANY
	R.....1	57.11.3102		1 k 1%		ANY
	R.....2	57.11.3102		1 k 1%		ANY
	R.....3	57.11.3102		1 k 1%		ANY
	S.....1	55.15.0501		KEY		ANY
	S.....2	55.15.0501		KEY		ANY
	S.....3	55.15.0501		KEY		ANY
	S.....4	55.15.0501		KEY		ANY
	S.....5	55.15.0501		KEY		ANY
	S.....6	55.15.0501		KEY		ANY
	S.....7	55.15.0501		KEY		ANY
	S.....8	55.15.0501		KEY		ANY
	S.....9	55.15.0501		KEY		ANY
	S....10	55.15.0501		KEY		ANY
	S....11	55.15.0501		KEY		ANY
	S....12	55.15.0501		KEY		ANY
	S....13	55.15.0501		KEY		ANY
	S....14	55.15.0501		KEY		ANY
	S....15	55.15.0501		KEY		ANY
	S....16	55.15.0501		KEY		ANY
	S....17	55.15.0501		KEY		ANY
	S....18	55.15.0501		KEY		ANY
	S....19	55.15.0501		KEY		ANY
	S....20	55.15.0501		KEY		ANY
	S....21	55.15.0501		KEY		ANY
	S....22	55.15.0501		KEY		ANY
	S....23	55.15.0501		KEY		ANY
	S....24	55.15.0501		KEY		ANY
	XDL...1	1.862.813.03		LED - ABSTANDSHALTER		ANY
	XDL...2	1.862.813.03		LED - ABSTANDSHALTER		ANY
	XDL...3	1.862.813.03		LED - ABSTANDSHALTER		ANY
	XDL...4	1.862.813.03		LED - ABSTANDSHALTER		ANY

S T U D E R (01) 90/09/06 LAR DP CHANNEL LEVELS + KEYS PL 1.862.813.00 PAGE 6

IND.	POS.NO.	PART NO.	VALUE	SPECIFICATIONS / EQUIVALENT		MANUF.
	XDL...5	1.862.813.03		LED - ABSTANDSHALTER		ANY
	XDL...6	1.862.813.03		LED - ABSTANDSHALTER		ANY
	XDL...7	1.862.813.03		LED - ABSTANDSHALTER		ANY
	XDL...8	1.862.813.03		LED - ABSTANDSHALTER		ANY
	XDL...9	53.99.0125		DIL 20-POL	(SPECIAL)	ANY
	XDL..10	53.99.0125		DIL 20-POL	(SPECIAL)	ANY
	XDL..11	53.99.0125		DIL 20-POL	(SPECIAL)	ANY
	XDL..12	53.99.0125		DIL 20-POL	(SPECIAL)	ANY
	XDL..13	53.99.0125		DIL 20-POL	(SPECIAL)	ANY
	XDL..14	53.99.0125		DIL 20-POL	(SPECIAL)	ANY
	XDL..15	53.99.0125		DIL 20-POL	(SPECIAL)	ANY
	XDL..16	53.99.0125		DIL 20-POL	(SPECIAL)	ANY
	XDL..17	53.99.0125		DIL 20-POL	(SPECIAL)	ANY
	XDL..18	53.99.0125		DIL 20-POL	(SPECIAL)	ANY
	XDL..19	53.99.0125		DIL 20-POL	(SPECIAL)	ANY
	XDL..20	53.99.0125		DIL 20-POL	(SPECIAL)	ANY
	XDL..21	53.99.0125		DIL 20-POL	(SPECIAL)	ANY
	XDL..22	53.99.0125		DIL 20-POL	(SPECIAL)	ANY
	XDL..23	53.99.0125		DIL 20-POL	(SPECIAL)	ANY
	XDL..24	53.99.0125		DIL 20-POL	(SPECIAL)	ANY
	XDL..25	53.99.0125		DIL 20-POL	(SPECIAL)	ANY
	XDL..26	53.99.0125		DIL 20-POL	(SPECIAL)	ANY
	XDL..27	53.99.0125		DIL 20-POL	(SPECIAL)	ANY
	XDL..28	53.99.0125		DIL 20-POL	(SPECIAL)	ANY
	XDL..29	53.99.0125		DIL 20-POL	(SPECIAL)	ANY
	XDL..30	53.99.0125		DIL 20-POL	(SPECIAL)	ANY
	XDL..31	53.99.0125		DIL 20-POL	(SPECIAL)	ANY
	XDL..32	53.99.0125		DIL 20-POL	(SPECIAL)	ANY
	XDL..33	1.862.813.03		LED - ABSTANDSHALTER		ANY
	XDL..34	1.862.813.03		LED - ABSTANDSHALTER		ANY
	XDL..35	1.862.813.03		LED - ABSTANDSHALTER		ANY
	XDL..36	1.862.813.03		LED - ABSTANDSHALTER		ANY
	XDL..37	1.862.813.03		LED - ABSTANDSHALTER		ANY
	XDL..38	1.862.813.03		LED - ABSTANDSHALTER		ANY
	XDL..39	1.862.813.03		LED - ABSTANDSHALTER		ANY
	XDL..40	1.862.813.03		LED - ABSTANDSHALTER		ANY
	XDL..41	1.862.813.03		LED - ABSTANDSHALTER		ANY

S T U D E R (01) 90/09/06 LAR DP CHANNEL LEVELS + KEYS PL 1.862.813.00 PAGE 7

IND.	POS.NO.	PART NO.	VALUE	SPECIFICATIONS / EQUIVALENT		MANUF.
	XDL..42	1.862.813.03		LED - ABSTANDSHALTER		ANY
	XDL..43	1.862.813.03		LED - ABSTANDSHALTER		ANY
	XDL..44	1.862.813.03		LED - ABSTANDSHALTER		ANY
	XDL..45	1.862.813.03		LED - ABSTANDSHALTER		ANY
	XDL..46	1.862.813.03		LED - ABSTANDSHALTER		ANY
	XDL..47	1.862.813.03		LED - ABSTANDSHALTER		ANY
	XDL..48	1.862.813.03		LED - ABSTANDSHALTER		ANY
	XDL..49	1.862.813.03		LED - ABSTANDSHALTER		ANY
	XDL..50	1.862.813.03		LED - ABSTANDSHALTER		ANY
	XDL..51	1.862.813.03		LED - ABSTANDSHALTER		ANY
	XDL..52	1.362.813.03		LED - ABSTANDSHALTER		ANY
	XDL..53	1.862.813.03		LED - ABSTANDSHALTER		ANY
	XDL..54	1.862.813.03		LED - ABSTANDSHALTER		ANY
	XDL..55	1.862.813.03		LED - ABSTANDSHALTER		ANY
	XDL..56	1.862.813.03		LED - ABSTANDSHALTER		ANY
	XDL..73	1.862.813.03		LED - ABSTANDSHALTER		ANY
	XDL..74	1.862.813.03		LED - ABSTANDSHALTER		ANY
	XDL..75	1.862.813.03		LED - ABSTANDSHALTER		ANY
	XDL..76	1.862.813.03		LED - ABSTANDSHALTER		ANY
	XDL..77	1.862.813.03		LED - ABSTANDSHALTER		ANY
	XDL..78	1.862.813.03		LED - ABSTANDSHALTER		ANY
	XDL..79	1.862.813.03		LED - ABSTANDSHALTER		ANY
	XDL..80	1.862.813.03		LED - ABSTANDSHALTER		ANY

REMARKS: (01) 06.09.90 LAR MP 25-48

MANUFACTURERS:
ST = STUDER PH = PHILIPS HP = HEWLETT PACKARD

ABBREVIATIONS:
CER = CERAMIC / FILM = FILM TYPE / XF = CLAMP FOR FUSES /
XIC = IC SOCKET

ORIG 89/07/05 (01) 90/09/06

S T U D E R (01) 90/09/06 LAR DP CHANNEL LEVELS + KEYS PL 1.862.813.00 PAGE 8

DP UP BOARD 1.862.815.21

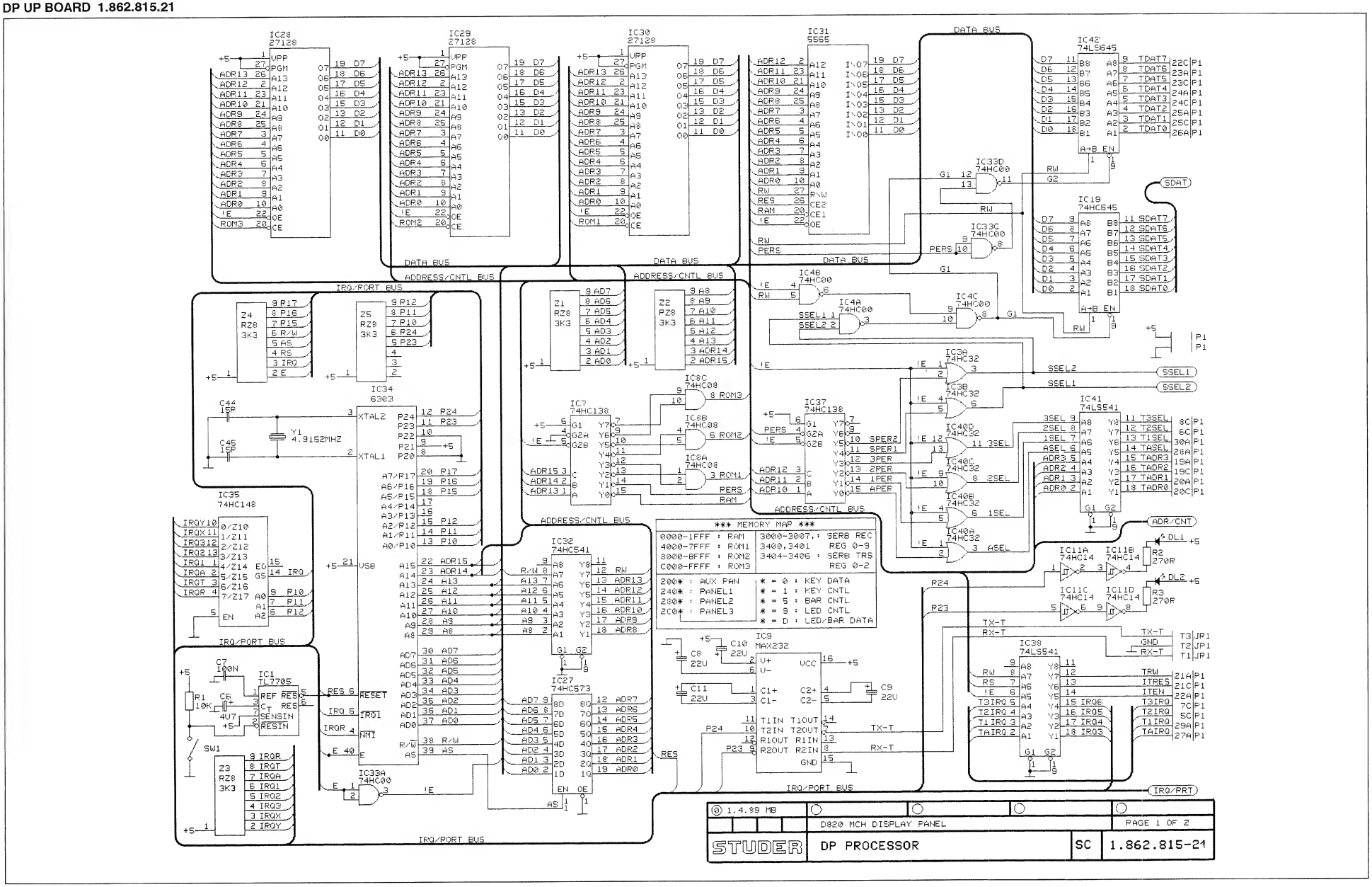

DP UP BOARD 1.862.815.21

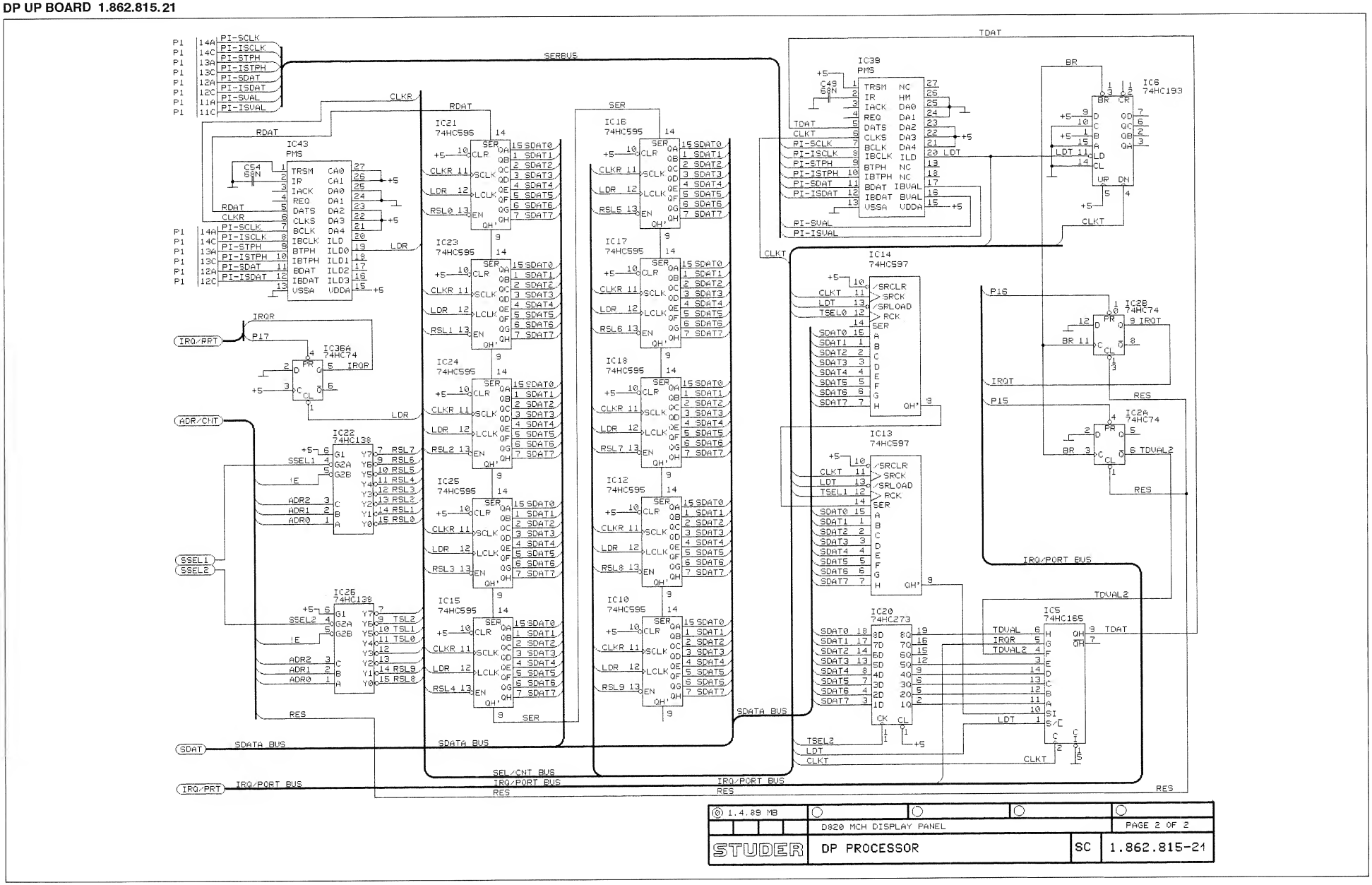

1.4.89 MB	D820 MCH DISPLAY PANEL		PAGE 2 OF 2
STUDER	DP PROCESSOR	SC	1.862.815-21

DP UP BOARD 1.862.815.21

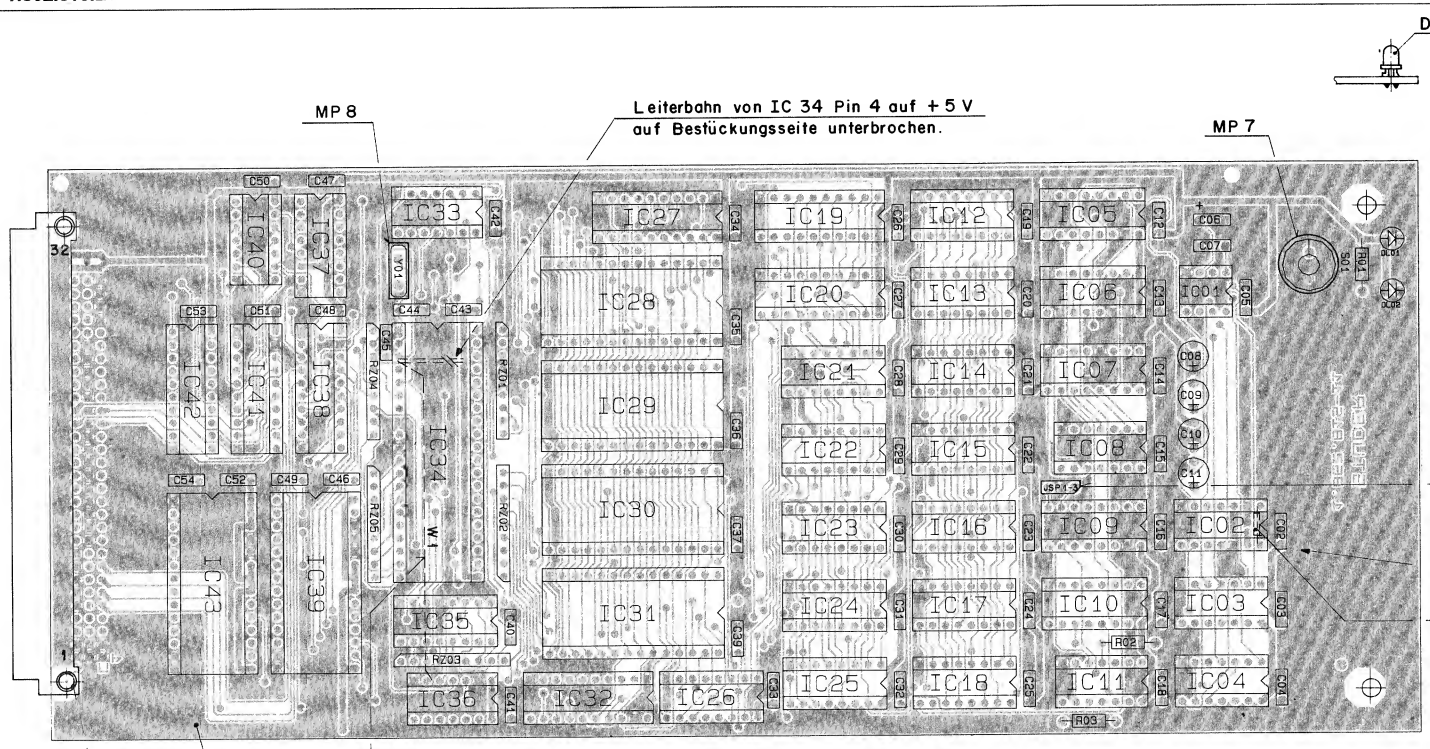

IND.	POS.NO.	PART NO.	VALUE	SPECIFICATIONS / EQUIVALENT	MANUF.
	C....2	59.06.0683	68nF	10%, 63V	ANY
	C....3	59.06.0683	68nF	10%, 63V	ANY
	C....4	59.06.0683	68nF	10%, 63V	ANY
	C....5	59.06.0683	68nF	10%, 63V	ANY
	C....6	59.26.1479	4.7uF	20%, 10V	ANY
	C....7	59.06.0104	100nF	10%, 63V	ANY
	C....8	59.26.1220	22uF	20%, 10V	ANY
	C....9	59.26.1220	22uF	20%, 10V	ANY
	C....10	59.26.1220	22uF	20%, 10V	ANY
	C....11	59.26.1220	22uF	20%, 10V	ANY
	C....12	59.06.0683	68nF	10%, 63V	ANY
	C....13	59.06.0683	68nF	10%, 63V	ANY
	C....14	59.06.0683	68nF	10%, 63V	ANY
	C....15	59.06.0683	68nF	10%, 63V	ANY
	C....16	59.06.0683	68nF	10%, 63V	ANY
	C....17	59.06.0683	68nF	10%, 63V	ANY
	C....18	59.06.0683	68nF	10%, 63V	ANY
	C....19	59.06.0683	68nF	10%, 63V	ANY
	C....20	59.06.0683	68nF	10%, 63V	ANY
	C....21	59.06.0683	68nF	10%, 63V	ANY
	C....22	59.06.0683	68nF	10%, 63V	ANY
	C....23	59.06.0683	68nF	10%, 63V	ANY
	C....24	59.06.0683	68nF	10%, 63V	ANY
	C....25	59.06.0683	68nF	10%, 63V	ANY
	C....26	59.06.0683	68nF	10%, 63V	ANY
	C....27	59.06.0683	68nF	10%, 63V	ANY
	C....28	59.06.0683	68nF	10%, 63V	ANY
	C....29	59.06.0683	68nF	10%, 63V	ANY
	C....30	59.06.0683	68nF	10%, 63V	ANY
	C....31	59.06.0683	68nF	10%, 63V	ANY
	C....32	59.06.0683	68nF	10%, 63V	ANY
	C....33	59.06.0683	68nF	10%, 63V	ANY
	C....34	59.06.0683	68nF	10%, 63V	ANY
	C....35	59.06.0683	68nF	10%, 63V	ANY
	C....36	59.06.0683	68nF	10%, 63V	ANY
	C....37	59.06.0683	68nF	10%, 63V	ANY
	C....39	59.06.0683	68nF	10%, 63V	ANY

S T U D E R (OO) 91/02/15 LAR DP MICROPROCESSOR , ESE PL 1.862.815.21 PAGE 1

IND.	POS.NO.	PART NO.	VALUE	SPECIFICATIONS / EQUIVALENT	MANUF.
	C....40	59.06.0683	68nF	10%, 63V	ANY
	C....41	59.06.0683	68nF	10%, 63V	ANY
	C....42	59.06.0683	68nF	10%, 63V	ANY
	C....43	59.06.0683	68nF	10%, 63V	ANY
	C....44	59.34.2220	22pF	5%, 63V	ANY
	C....45	59.34.2220	22pF	5%, 63V	ANY
	C....46	59.06.0683	68nF	10%, 63V	ANY
	C....47	59.06.0683	68nF	10%, 63V	ANY
	C....48	59.06.0683	68nF	10%, 63V	ANY
	C....49	59.06.0683	68nF	10%, 63V	ANY
	C....50	59.06.0683	68nF	10%, 63V	ANY
	C....51	59.06.0683	68nF	10%, 63V	ANY
	C....52	59.06.0683	68nF	10%, 63V	ANY
	C....53	59.06.0683	68nF	10%, 63V	ANY
	C....54	59.06.0683	68nF	10%, 63V	ANY
	DL....1	50.04.2129		LS 3160 (RED)	ANY
	DL....2	50.04.2162		HLMP 1540 (GREEN)	ANY
	IC....1	50.11.0122		TL 7705 ACP	ANY
	IC....2	50.17.1074		74 HC 74	ANY
	IC....3	50.17.1032		74 HC 32	ANY
	IC....4	50.17.1000		74 HC 00	ANY
	IC....5	50.17.1165		74 HC 165	ANY
	IC....6	50.17.1193		74 HC 193	ANY
	IC....7	50.17.1138		74 HC 138	ANY
	IC....8	50.17.1008		74 HC 08	ANY
	IC....9	50.15.0120		MAX 232	ANY
	IC....10	50.17.1595		74 HC 595	ANY
	IC....11	50.17.1014		74 HC 14	ANY
	IC....12	50.17.1595		74 HC 595	ANY
	IC....13	50.17.1597		74 HC 597	ANY
	IC....14	50.17.1597		74 HC 597	ANY
	IC....15	50.17.1595		74 HC 595	ANY
	IC....16	50.17.1595		74 HC 595	ANY
	IC....17	50.17.1595		74 HC 595	ANY
	IC....18	50.17.1595		74 HC 595	ANY

S T U D E R (OO) 91/02/15 LAR DP MICROPROCESSOR , ESE PL 1.862.815.21 PAGE 2

IND.	POS.NO.	PART NO.	VALUE	SPECIFICATIONS / EQUIVALENT	MANUF.
	IC...19	50.17.1645		74 HC 645	ANY
	IC...20	50.17.1273		74 HC 273	ANY
	IC...21	50.17.1595		74 HC 595	ANY
	IC...22	50.17.1138		74 HC 138	ANY
	IC...23	50.17.1595		74 HC 595	ANY
	IC...24	50.17.1595		74 HC 595	ANY
	IC...25	50.17.1595		74 HC 595	ANY
	IC...26	50.17.1138		74 HC 138	ANY
	IC...27	50.17.1573		74 HC 573	ANY
	IC...28	50.14.0125		HM 27128AS-25 (SW 1.862.825.21)	ANY
	IC...29	50.14.0125		HM 27128AS-25 (SW 1.862.826.21)	ANY
	IC...31	50.14.0133		HM 6264LP-15	ANY
	IC...32	50.17.1541		74 HC 541	ANY
	IC...33	50.17.1000		74 HC 00	ANY
	IC...34	50.16.0119		HD63A03	ANY
	IC...35	50.17.1148		74 HC 148	ANY
	IC...36	50.17.1074		74 HC 74	ANY
	IC...37	50.17.1138		74 HC 138	ANY
	IC...38	50.06.0541		74 LS 541	ANY
	IC...39	50.50.0010		PORTMASTER	ANY
	IC...40	50.17.1032		74 HC 32	ANY
	IC...41	50.06.0541		74 LS 541	ANY
	IC...42	50.06.1645		74 LS 645	ANY
	IC...43	50.50.0010		PORTMASTER	ANY
	JSP...1	54.11.0126		JUMPER CONNECTOR	ANY
	JSP...2	54.11.0126		JUMPER CONNECTOR	ANY
	JSP...3	54.11.0126		JUMPER CONNECTOR	ANY
	MP....1	1.862.815.11		PCB	St
	MP....2	28.99.0119		RIVETING NUT, D2.5 * 10	ANY
	MP....3	28.99.0119		RIVETING NUT, D2.5 * 10	ANY
	MP....4	43.01.0108		ESE - Warnschild	ANY
	MP....5	1.862.815.01		ETIK. PRINT.NR.	ST
	MP....6	1.101.001.20		ETIK. HARDWARE	ST
	MP....7	1.010.015.50		ISOLIERSCH. KEY	ST
	MP....8	89.01.1499		ISOLIERSCH. QUARZ	ST

S T U D E R (OO) 91/02/15 LAR DP MICROPROCESSOR , ESE PL 1.862.815.21 PAGE 3

IND.	POS.NO.	PART NO.	VALUE	SPECIFICATIONS / EQUIVALENT	MANUF.
	P.....1	54.01.0350		CONNECTOR 3 * 32	ANY
	R.....1	57.11.3103	10 k	1%	ANY
	R.....2	57.11.3271	270 E	1%	ANY
	R.....3	57.11.3271	270 E	1%	ANY
	RZ....1	57.88.4332	3.3 k	8*	ANY
	RZ....2	57.88.4332	3.3 k	8*	ANY
	RZ....3	57.88.4332	3.3 k	8*	ANY
	RZ....4	57.88.4332	3.3 k	8*	ANY
	RZ....5	57.88.4332	3.3 k	8*	ANY
	S.....1	55.03.0122		KEY	ANY
(01)	W.....1	1.010.012.64		WRAP-DRAHT 120 mm	St
	XIC..28	53.03.0173		DIL 28-POL	ANY
	XIC..29	53.03.0173		DIL 28-POL	ANY
	XIC..30	53.03.0173		DIL 28-POL	ANY
	XIC..34	53.03.0172		DIL 40-POL	ANY
	XIC..39	53.03.0173		DIL 28-POL	ANY
	XIC..43	53.03.0173		DIL 28-POL	ANY
	Y.....1	89.01.0560		4.9152 MHZ	ANY

REMARKS:

MANUFACTURERS:
ST = STUDER, Ph = PHILIPS

ABBREVIATIONS:
CER = CERAMIC / FILM = FILM TYPE / XF = CLAMP FOR FUSES /
XIC = IC SOCKET

ORIG 91/02/15

S T U D E R (OO) 91/02/15 LAR DP MICROPROCESSOR , ESE PL 1.862.815.21 PAGE 4

DP BACKPANEL 16 + 1.862.819.00

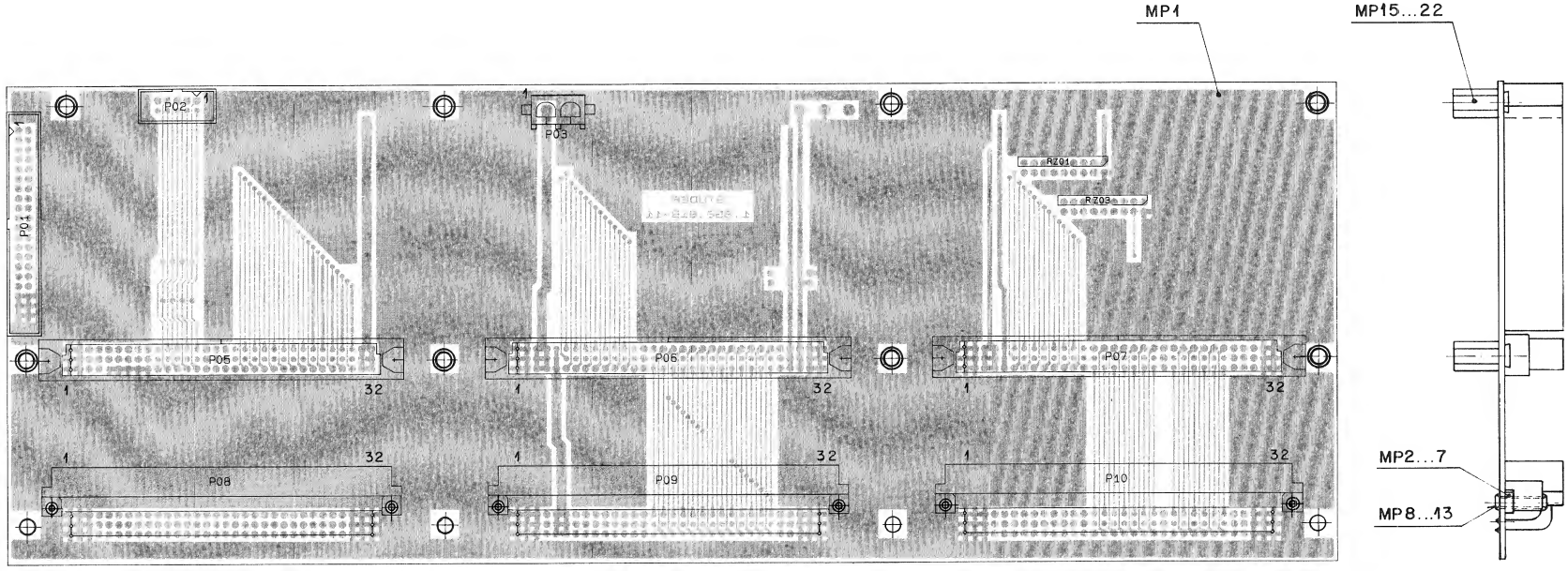

IND.	POS.NO.	PART NO.	VALUE	SPECIFICATIONS / EQUIVALENT	MANUF.
	MP....1	1.862.819.11		PCB	ST
(00)	MP....2	1.010.020.23		DISTANZRING	ST
(01)	MP....2	1.010.113.23		DISTANZRING POM d2.7 / 5 x 1.5	ST
(00)	MP....3	1.010.020.23		DISTANZRING	ST
(01)	MP....3	1.010.113.23		DISTANZRING POM d2.7 / 5 x 1.5	ST
(00)	MP....4	1.010.020.23		DISTANZRING	ST
(01)	MP....4	1.010.113.23		DISTANZRING POM d2.7 / 5 x 1.5	ST
(00)	MP....5	1.010.020.23		DISTANZRING	ST
(01)	MP....5	1.010.113.23		DISTANZRING POM d2.7 / 5 x 1.5	ST
(00)	MP....6	1.010.020.23		DISTANZRING	ST
(01)	MP....6	1.010.113.23		DISTANZRING POM d2.7 / 5 x 1.5	ST
(00)	MP....7	1.010.020.23		DISTANZRING	ST
(01)	MP....7	1.010.113.23		DISTANZRING POM d2.7 / 5 x 1.5	ST
	MP....8	28.21.2312		RIVETING NUT 2.5x12	ANY
	MP....9	28.21.2312		RIVETING NUT 2.5x12	ANY
	MP...10	28.21.2312		RIVETING NUT 2.5x12	ANY
	MP...11	28.21.2312		RIVETING NUT 2.5x12	ANY
	MP...12	28.21.2312		RIVETING NUT 2.5x12	ANY
	MP...13	28.21.2312		RIVETING NUT 2.5x12	ANY
	MP...14	1.862.819.01		ETIK. PRINT.NR	ST
	MP...15	1.862.819.02		NIETMUTTER	ST
	MP...16	1.862.819.02		NIETMUTTER	ST
	MP...17	1.862.819.02		NIETMUTTER	ST
	MP...18	1.862.819.02		NIETMUTTER	ST
	MP...19	1.862.819.02		NIETMUTTER	ST
	MP...20	1.862.819.02		NIETMUTTER	ST
	MP...21	1.862.819.02		NIETMUTTER	ST
	MP...22	1.862.819.02		NIETMUTTER	ST
	P.....1	54.14.4040		CONNECTOR 40-PIN ACTION PIN	ANY
	P.....2	54.14.4010		CONNECTOR 10-PIN ACTION PIN	ANY
	P.....3	54.25.0002		POWER CON. 2-POL	ANY
	P.....5	54.11.2011		CONNECTOR 3 x 32 ACTION PIN	ANY
	P.....6	54.11.2011		CONNECTOR 3 x 32 ACTION PIN	ANY
	P.....7	54.11.2011		CONNECTOR 3 x 32 ACTION PIN	ANY
	P.....8	1.862.819.03		CONNECTOR 3 x 32 SPEZ.	HA
	P.....9	1.862.819.03		CONNECTOR 3 x 32 SPEZ.	HA

S T U D E R (01) 90/02/16 RU DP BACKPANEL 16+ PL 1.862.819.00 PAGE 1

IND.	POS.NO.	PART NO.	VALUE	SPECIFICATIONS / EQUIVALENT	MANUF.
	P....10	1.862.819.03		CONNECTOR 3 x 32 SPEZ.	HA
	Z.....1	57.88.4332		8x 3.3 K	ANY
	Z.....3	57.88.4332		8x 3.3 K	ANY

REMARKS:
01: MP 2...7 Distanzring Kunststoff

MANUFACTURERS:
ST = STUDER, Ph = PHILIPS

ABBREVIATIONS:
CER = CERAMIC / FILM = FILM TYPE / XF = CLAMP FOR FUSES /
XIC = IC SOCKET

ORIG 89/07/05 (01) 90/02/16

S T U D E R (01) 90/02/16 RU DP BACKPANEL 16+ PL 1.862.819.00 PAGE 2

DP BACKPANEL 16 + 32 1.862.822.00

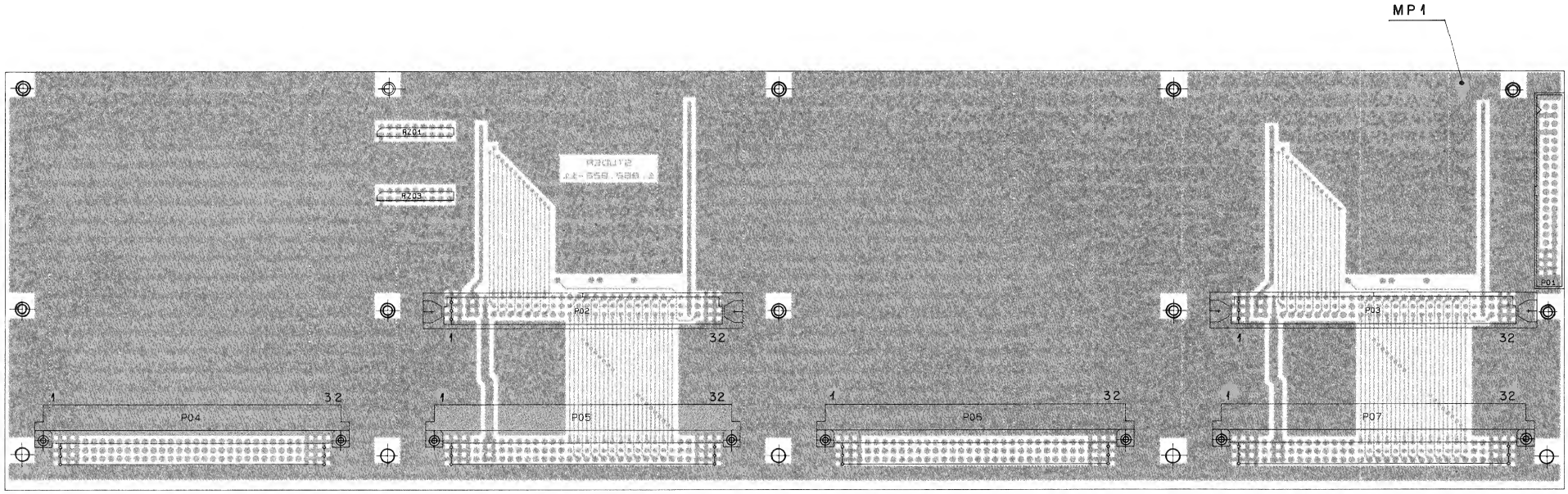

IND.	POS.NO.	PART NO.	VALUE	SPECIFICATIONS / EQUIVALENT	MANUF.
	MP....1	1.862.822.11		PCB	ST
(00)	MP....2	1.010.020.23		DISTANZRING	ST
(01)	MP....2	1.010.113.23		DISTANZRING POM 2.7 / 5 x 1.5	ST
(00)	MP....3	1.010.020.23		DISTANZRING	ST
(01)	MP....3	1.010.113.23		DISTANZRING POM 2.7 / 5 x 1.5	ST
(00)	MP....4	1.010.020.23		DISTANZRING	ST
(01)	MP....4	1.010.113.23		DISTANZRING POM 2.7 / 5 x 1.5	ST
(00)	MP....5	1.010.020.23		DISTANZRING	ST
(01)	MP....5	1.010.113.23		DISTANZRING POM 2.7 / 5 x 1.5	ST
(00)	MP....6	1.010.020.23		DISTANZRING	ST
(01)	MP....6	1.010.113.23		DISTANZRING POM 2.7 / 5 x 1.5	ST
(00)	MP....7	1.010.020.23		DISTANZRING	ST
(01)	MP....7	1.010.113.23		DISTANZRING POM 2.7 / 5 x 1.5	ST
(00)	MP....8	1.010.020.23		DISTANZRING	ST
(01)	MP....8	1.010.113.23		DISTANZRING POM 2.7 / 5 x 1.5	ST
(00)	MP....9	1.010.020.23		DISTANZRING	ST
(01)	MP....9	1.010.113.23		DISTANZRING POM 2.7 / 5 x 1.5	ST
	MP...10	28.21.2312		RIVETING NUT 2.5x12	ANY
	MP...11	28.21.2312		RIVETING NUT 2.5x12	ANY
	MP...12	28.21.2312		RIVETING NUT 2.5x12	ANY
	MP...13	28.21.2312		RIVETING NUT 2.5x12	ANY
	MP...14	28.21.2312		RIVETING NUT 2.5x12	ANY
	MP...15	28.21.2312		RIVETING NUT 2.5x12	ANY
	MP...16	28.21.2312		RIVETING NUT 2.5x12	ANY
	MP...17	28.21.2312		RIVETING NUT 2.5x12	ANY
	MP...18	1.862.822.01		ETIK. FRONT.NE	ST
	MP...19	1.862.819.02		NIETMUTTER	ST
	MP...20	1.862.819.02		NIETMUTTER	ST
	MP...21	1.862.819.02		NIETMUTTER	ST
	MP...22	1.862.819.02		NIETMUTTER	ST
	MP...23	1.862.819.02		NIETMUTTER	ST
	MP...24	1.862.819.02		NIETMUTTER	ST
	MP...25	1.862.819.02		NIETMUTTER	ST
	MP...26	1.862.819.02		NIETMUTTER	ST
	MP...27	1.862.819.02		NIETMUTTER	ST
	MP...28	1.862.819.02		NIETMUTTER	ST

S T U D E R (01) 90/02/16 RU DP BACKPANEL 16+32 PL 1.862.822.00 PAGE 1

IND.	POS.NO.	PART NO.	VALUE	SPECIFICATIONS / EQUIVALENT	MANUF.
	P.....1	54.14.4040		CONNECTOR 40-PIN ACTION PIN	ANY
	P.....2	54.11.2011		CONNECTOR 3 * 32 ACTION PIN	ANY
	P.....3	54.11.2011		CONNECTOR 3 * 32 ACTION PIN	ANY
	P.....4	1.862.819.03		CONNECTOR 3 * 32 SPEZ.	HA
	P.....5	1.862.819.03		CONNECTOR 3 * 32 SPEZ.	HA
	P.....6	1.862.819.03		CONNECTOR 3 * 32 SPEZ.	HA
	P.....7	1.862.819.03		CONNECTOR 3 * 32 SPEZ.	HA
	Z.....1	57.88.4332		8 * 3.3 K	ANY
	Z.....3	57.88.4332		8 * 3.3 K	ANY

REMARKS:
01: MP 2...9 Distanzring Kunststoff

MANUFACTURERS:
ST = STUDER, Ph = PHILIPS

ABBREVIATIONS:
CER = CERAMIC / FILM = FILM TYPE / XF = CLAMP FOR FUSES /
XIC = IC SOCKET

ORIG 89/07/05 (01) 90/02/16

S T U D E R (01) 90/02/16 RU DP BACKPANEL 16+32 PL 1.862.822.00 PAGE 2

BLOCKDIAGRAM HEADELECTRONICS

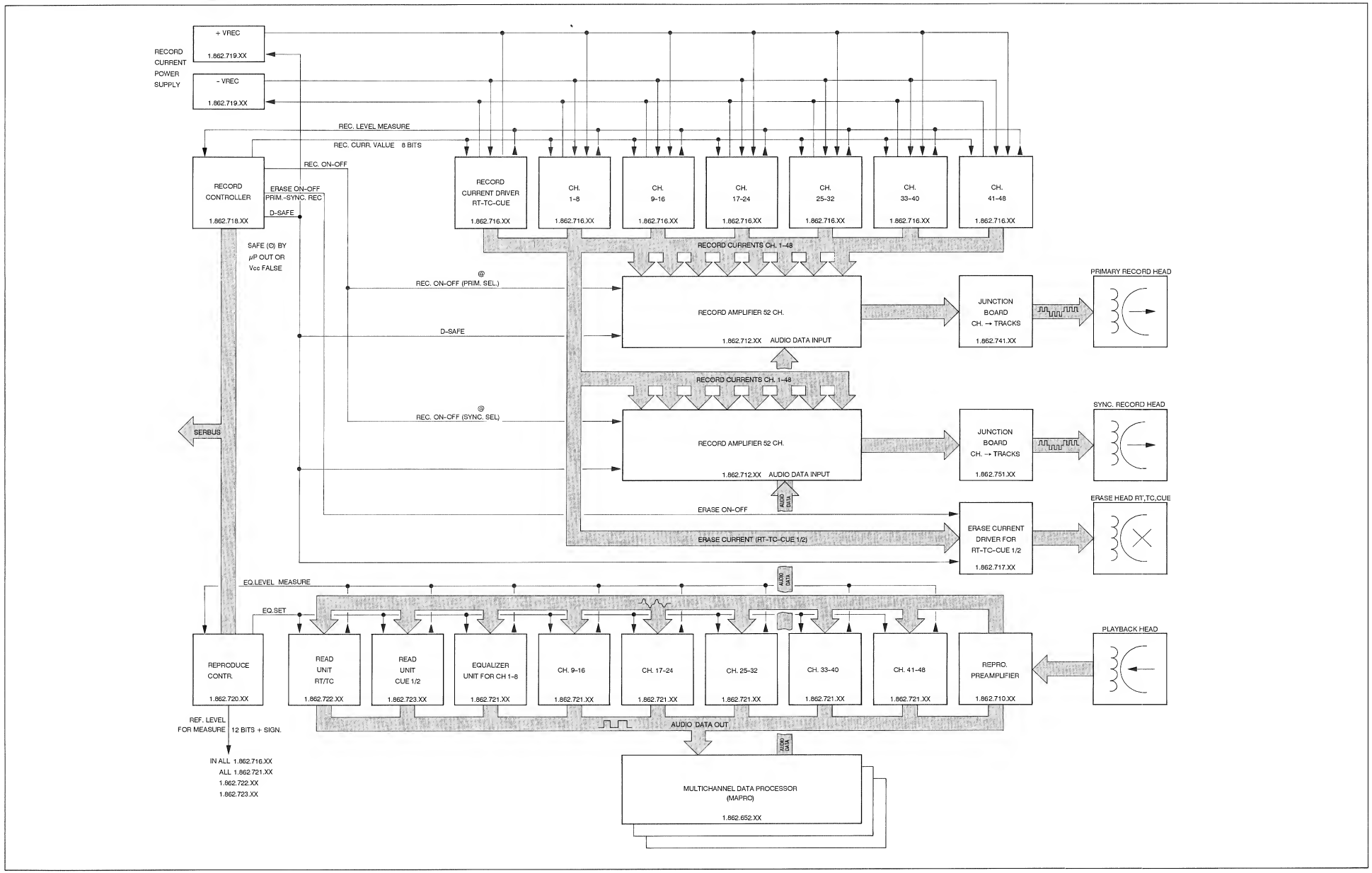

BASIS BOARD EQUALIZER 1.862.703.00

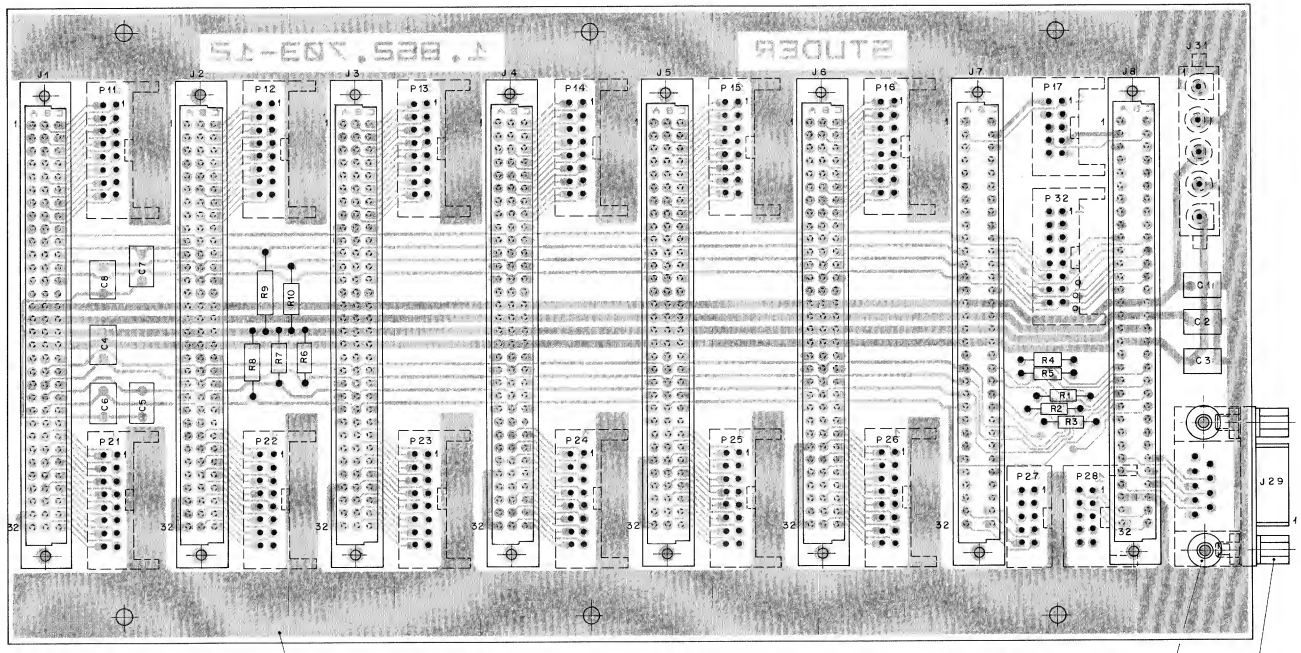

① R1 ..R5 , C4 ..C6 neu dazu

Schild 1.862.703-01
aufgeklebt nach Fabrikationsmuster.

IND.	POS.NO.	PART NO.	VALUE	SPECIFICATIONS / EQUIVALENT	MANUF.
	C.....1	59.06.0105	1 uF	10%, 50V , PETP	
	C.....2	59.06.0105	1 uF	10%, 50V , PETP	
	C.....3	59.06.0105	1 uF	10%, 50V , PETP	
(01)	C.....4	59.34.5471	470 pF	5%, CER	
(01)	C.....5	59.34.5471	470 pF	5%, CER	
(01)	C.....6		not used		
(01)	C.....7	59.34.5471	470 pF	5%, CER	
(01)	C.....8		not used		
	J.....1	54.11.2011	Connector	3 * 32 Euro Print	
	J.....2	54.11.2011	Connector	3 * 32 Euro Print	
	J.....3	54.11.2011	Connector	3 * 32 Euro Print	
	J.....4	54.11.2011	Connector	3 * 32 Euro Print	
	J.....5	54.11.2011	Connector	3 * 32 Euro Print	
	J.....6	54.11.2011	Connector	3 * 32 Euro Print	
	J.....7	54.11.2025	Connector	2 * 32 Euro Print	
	J.....8	54.11.2025	Connector	2 * 32 Euro Print	
(00)	J....29	54.13.0001	Connector	9 Contacts	AMP
(02)	J....29	54.13.0111	Connector	9 Contacts	T+B
	J....31	54.25.0005	Connector	5 Contacts	AMP
(00)	P....11	54.14.2102	Connector	16 Contacts, latch, ribbon cable	
(02)	P....11	54.14.2122	Connector	16 Contacts, latch, ribbon cable	
(00)	P....12	54.14.2102	Connector	16 Contacts, latch, ribbon cable	
(02)	P....12	54.14.2122	Connector	16 Contacts, latch, ribbon cable	
(00)	P....13	54.14.2102	Connector	16 Contacts, latch, ribbon cable	
(02)	P....13	54.14.2122	Connector	16 Contacts, latch, ribbon cable	
(00)	P....14	54.14.2102	Connector	16 Contacts, latch, ribbon cable	
(02)	P....14	54.14.2122	Connector	16 Contacts, latch, ribbon cable	
(00)	P....15	54.14.2102	Connector	16 Contacts, latch, ribbon cable	
(02)	P....15	54.14.2122	Connector	16 Contacts, latch, ribbon cable	
(00)	P....16	54.14.2102	Connector	16 Contacts, latch, ribbon cable	
(02)	P....16	54.14.2122	Connector	16 Contacts, latch, ribbon cable	
(00)	P....17	54.14.2101	Connector	10 Contacts, latch, ribbon cable	
(02)	P....17	54.14.2121	Connector	10 Contacts, latch, ribbon cable	
(00)	P....21	54.14.2102	Connector	16 Contacts, latch, ribbon cable	
(02)	P....21	54.14.2122	Connector	16 Contacts, latch, ribbon cable	

S T U D E R (02) 90/05/17 IVA BASIS BOARD EQUALIZER PL 1.862.703.00 PAGE 1

IND.	POS.NO.	PART NO.	VALUE	SPECIFICATIONS / EQUIVALENT	MANUF.
(00)	P....22	54.14.2102	Connector	16 Contacts, latch, ribbon cable	
(02)	P....22	54.14.2122	Connector	16 Contacts, latch, ribbon cable	
(00)	P....23	54.14.2102	Connector	16 Contacts, latch, ribbon cable	
(02)	P....23	54.14.2122	Connector	16 Contacts, latch, ribbon cable	
(00)	P....24	54.14.2102	Connector	16 Contacts, latch, ribbon cable	
(02)	P....24	54.14.2122	Connector	16 Contacts, latch, ribbon cable	
(00)	P....25	54.14.2102	Connector	16 Contacts, latch, ribbon cable	
(02)	P....25	54.14.2122	Connector	16 Contacts, latch, ribbon cable	
(00)	P....26	54.14.2102	Connector	16 Contacts, latch, ribbon cable	
(02)	P....26	54.14.2122	Connector	16 Contacts, latch, ribbon cable	
(00)	P....27	54.14.2101	Connector	10 Contacts, latch, ribbon cable	
(02)	P....27	54.14.2121	Connector	10 Contacts, latch, ribbon cable	
(00)	P....28	54.14.2101	Connector	10 Contacts, latch, ribbon cable	
(02)	P....28	54.14.2121	Connector	10 Contacts, latch, ribbon cable	
(00)	P....32	54.14.2102	Connector	16 Contacts, latch, ribbon cable	
(02)	P....32	54.14.2122	Connector	16 Contacts, latch, ribbon cable	
(01)	R.....1	57.11.3470	47 Ohm	5%, 0207 , MF	
(01)	R.....2	57.11.3470	47 Ohm	5%, 0207 , MF	
(01)	R.....3	57.11.3470	47 Ohm	5%, 0207 , MF	
(01)	R.....4	57.11.3470	47 Ohm	5%, 0207 , MF	
(01)	R.....5	57.11.3470	47 Ohm	5%, 0207 , MF	
(01)	R.....6		not used		
(01)	R.....7		not used		
(01)	R.....8		not used		
(01)	R.....9		not used		
(01)	R....10		not used		

S T U D E R (02) 90/05/17 IVA BASIS BOARD EQUALIZER PL 1.862.703.00 PAGE 2

IND.	POS.NO.	PART NO.	VALUE	SPECIFICATIONS / EQUIVALENT	MANUF.

(01) 10.10.89 Improved interferences suppression on control lines (D-Signal)

(02) 17.05.90 New connectors with long contacts.

PETP=Polyesterfilm

MANUFACTURER: Fc=Fairchild, GI=General Instruments, ITT=Intermetall, Mot=Motorola, Ph=Philips, SES=Saccosem, SGS=SGS/Ates, TE=Telefunken, Th=Thomson.

ORIG 89/04/24 (01) 89/10/10 (02) 90/05/17

S T U D E R (02) 90/05/17 IVA BASIS BOARD EQUALIZER PL 1.862.703.00 PAGE 3

BASIS BOARD AUDIO CONTROL 1.862.704.00

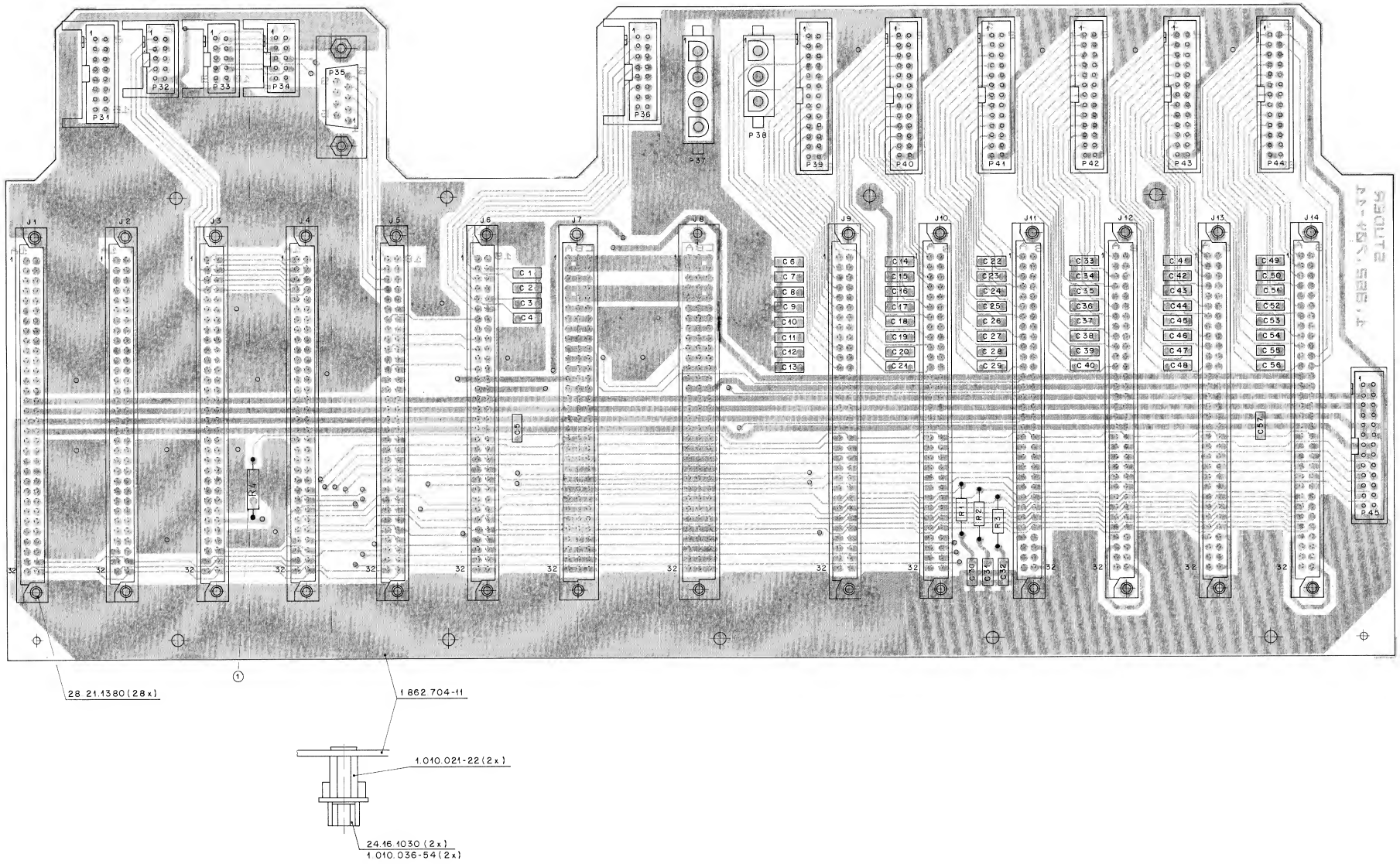

BASIS BOARD AUDIO CONTROL 1.862.704.00

IND.	POS.NO.	PART NO.	VALUE	SPECIFICATIONS / EQUIVALENT	MANUF.
	C.....1	59.06.0472	4700 pF	10%, 63V , PETP	
	C.....2	59.06.0472	4700 pF	10%, 63V , PETP	
	C.....3	59.06.0472	4700 pF	10%, 63V , PETP	
	C.....4	59.06.0472	4700 pF	10%, 63V , PETP	
	C.....5	59.06.0103	.01 uF	10%, 63V , PETP	
	C.....6	59.06.0472	4700 pF	10%, 63V , PETP	
	C.....7	59.06.0472	4700 pF	10%, 63V , PETP	
	C.....8	59.06.0472	4700 pF	10%, 63V , PETP	
	C.....9	59.06.0472	4700 pF	10%, 63V , PETP	
	C....10	59.06.0472	4700 pF	10%, 63V , PETP	
	C....11	59.06.0472	4700 pF	10%, 63V , PETP	
	C....12	59.06.0472	4700 pF	10%, 63V , PETP	
	C....13	59.06.0472	4700 pF	10%, 63V , PETP	
	C....14	59.06.0472	4700 pF	10%, 63V , PETP	
	C....15	59.06.0472	4700 pF	10%, 63V , PETP	
	C....16	59.06.0472	4700 pF	10%, 63V , PETP	
	C....17	59.06.0472	4700 pF	10%, 63V , PETP	
	C....18	59.06.0472	4700 pF	10%, 63V , PETP	
	C....19	59.06.0472	4700 pF	10%, 63V , PETP	
	C....20	59.06.0472	4700 pF	10%, 63V , PETP	
	C....21	59.06.0472	4700 pF	10%, 63V , PETP	
	C....22	59.06.0472	4700 pF	10%, 63V , PETP	
	C....23	59.06.0472	4700 pF	10%, 63V , PETP	
	C....24	59.06.0472	4700 pF	10%, 63V , PETP	
	C....25	59.06.0472	4700 pF	10%, 63V , PETP	
	C....26	59.06.0472	4700 pF	10%, 63V , PETP	
	C....27	59.06.0472	4700 pF	10%, 63V , PETP	
	C....28	59.06.0472	4700 pF	10%, 63V , PETP	
	C....29	59.06.0472	4700 pF	10%, 63V , PETP	
	C....30	59.06.0102	1000 pF	10%, 63V , PETP	
	C....31	59.06.0102	1000 pF	10%, 63V , PETP	
	C....32	59.06.0102	1000 pF	10%, 63V , PETP	
	C....33	59.06.0472	4700 pF	10%, 63V , PETP	
	C....34	59.06.0472	4700 pF	10%, 63V , PETP	
	C....35	59.06.0472	4700 pF	10%, 63V , PETP	
	C....36	59.06.0472	4700 pF	10%, 63V , PETP	
	C....37	59.06.0472	4700 pF	10%, 63V , PETP	

IND.	POS.NO.	PART NO.	VALUE	SPECIFICATIONS / EQUIVALENT	MANUF.
	C....38	59.06.0472	4700 pF	10%, 63V , PETP	
	C....39	59.06.0472	4700 pF	10%, 63V , PETP	
	C....40	59.06.0472	4700 pF	10%, 63V , PETP	
	C....41	59.06.0472	4700 pF	10%, 63V , PETP	
	C....42	59.06.0472	4700 pF	10%, 63V , PETP	
	C....43	59.06.0472	4700 pF	10%, 63V , PETP	
	C....44	59.06.0472	4700 pF	10%, 63V , PETP	
	C....45	59.06.0472	4700 pF	10%, 63V , PETP	
	C....46	59.06.0472	4700 pF	10%, 63V , PETP	
	C....47	59.06.0472	4700 pF	10%, 63V , PETP	
	C....48	59.06.0472	4700 pF	10%, 63V , PETP	
	C....49	59.06.0472	4700 pF	10%, 63V , PETP	
	C....50	59.06.0472	4700 pF	10%, 63V , PETP	
	C....51	59.06.0472	4700 pF	10%, 63V , PETP	
	C....52	59.06.0472	4700 pF	10%, 63V , PETP	
	C....53	59.06.0472	4700 pF	10%, 63V , PETP	
	C....54	59.06.0472	4700 pF	10%, 63V , PETP	
	C....55	59.06.0472	4700 pF	10%, 63V , PETP	
	C....56	59.06.0472	4700 pF	10%, 63V , PETP	
	C....57	59.06.0103	.01 uF	10%, 63V , PETP	
	J.....1	54.11.2005	Connector	2 * 32 Euro Print	
	J.....2	54.11.2005	Connector	2 * 32 Euro Print	
	J.....3	54.11.2005	Connector	2 * 32 Euro Print	
	J.....4	54.11.2005	Connector	2 * 32 Euro Print	
	J.....5	54.11.2005	Connector	2 * 32 Euro Print	
	J.....6	54.11.2005	Connector	2 * 32 Euro Print	
	J.....7	54.11.2024	Connector	3 * 32 Euro Print	
	J.....8	54.11.2024	Connector	3 * 32 Euro Print	
	J.....9	54.11.2005	Connector	2 * 32 Euro Print	
	J....10	54.11.2005	Connector	2 * 32 Euro Print	
	J....11	54.11.2005	Connector	2 * 32 Euro Print	
	J....12	54.11.2005	Connector	2 * 32 Euro Print	
	J....13	54.11.2005	Connector	2 * 32 Euro Print	
	J....14	54.11.2005	Connector	2 * 32 Euro Print	
(00)	L.....1	62.01.0115	Coil	Wideband	

IND.	POS.NO.	PART NO.	VALUE	SPECIFICATIONS / EQUIVALENT	MANUF.
(01)	L.....1		not used		
	P....31	54.14.2102	Connector	16 Contacts, Latch, Flat Cable	
	P....32	54.14.2001	Connector	10 Contacts, Flat Cable	
	P....33	54.14.2001	Connector	10 Contacts, Flat Cable	
	P....34	54.14.2001	Connector	10 Contacts, Flat Cable	
	P....35	54.13.0021	Connector	9 Contacts	AMP
	P....36	54.14.2102	Connector	16 Contacts, Latch, Flat Cable	
	P....37	54.25.0006	Connector	6 Contacts, 16A	AMP
	P....38	54.25.0003	Connector	3 Contacts, 16A	AMP
	P....39	54.14.2003	Connector	26 Contacts, Flat Cable	
	P....40	54.14.2003	Connector	26 Contacts, Flat Cable	
	P....41	54.14.2003	Connector	26 Contacts, Flat Cable	
	P....42	54.14.2003	Connector	26 Contacts, Flat Cable	
	P....43	54.14.2003	Connector	26 Contacts, Flat Cable	
	P....44	54.14.2003	Connector	26 Contacts, Flat Cable	
	R.....1	57.11.3470	47 Ohm	5%, 0207 , MF	
	R.....2	57.11.3470	47 Ohm	5%, 0207 , MF	
	R.....3	57.11.3470	47 Ohm	5%, 0207 , MF	
	R.....4	57.11.3101	100 Ohm	5%, 0207 , MF	

(1) 19.09.89 Improved noise suppression on A-MESREF Signal.

MANUFACTURER: Fc=Fairchild, GI=General Instruments, ITT=Internetall, Mot=Motorola, Ph=Philips, SES=Seecosem, SGS=SGS/Ates, Tf=Telefunken, Tho=Thomson.

ORIG 89/04/26 (01) 89/09/19

REPRO PREAMPLIFIER 48 CH 1.862.710.00

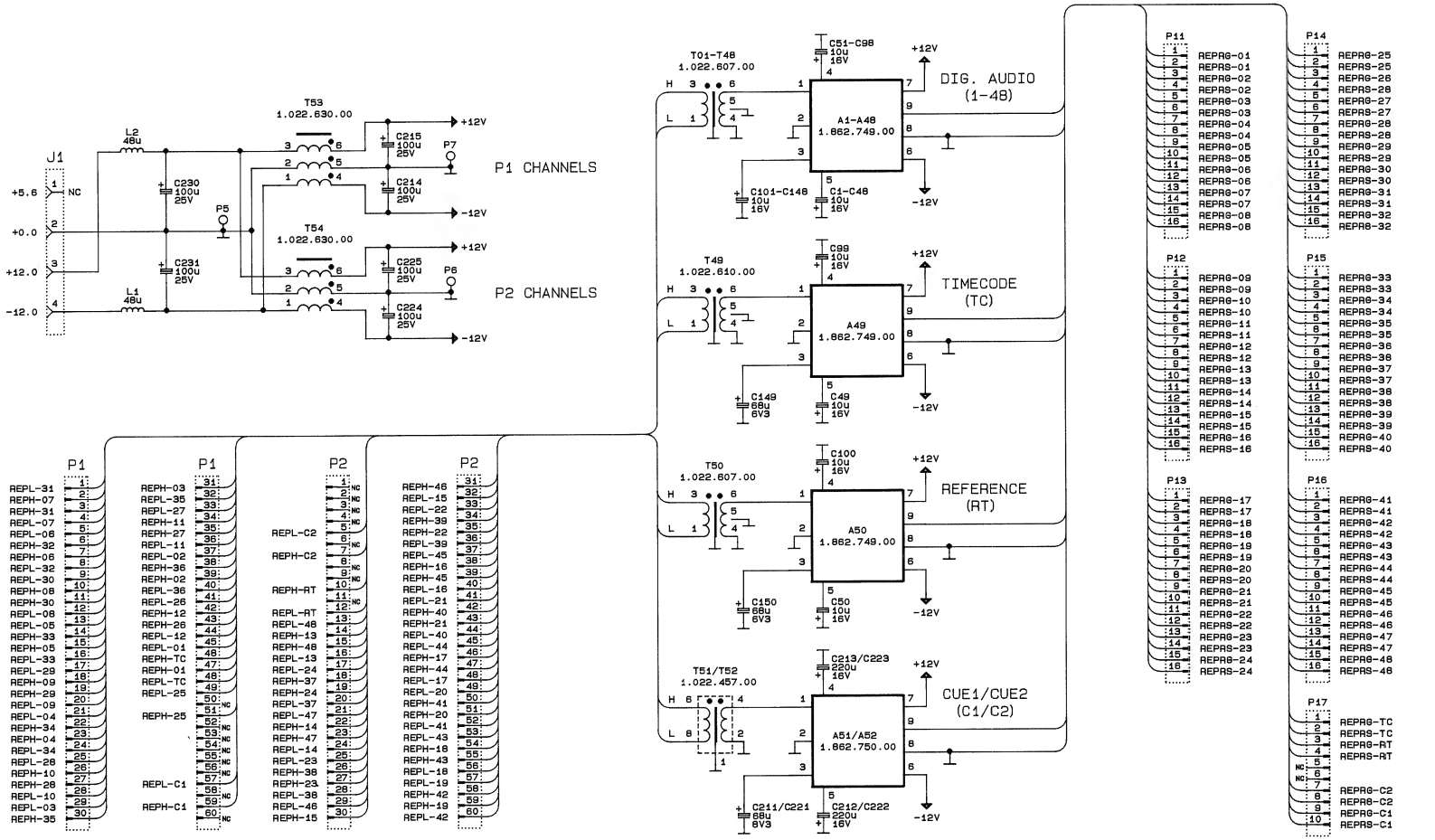

REPRO PREAMPLIFIER 48 CH 1.862.710.00

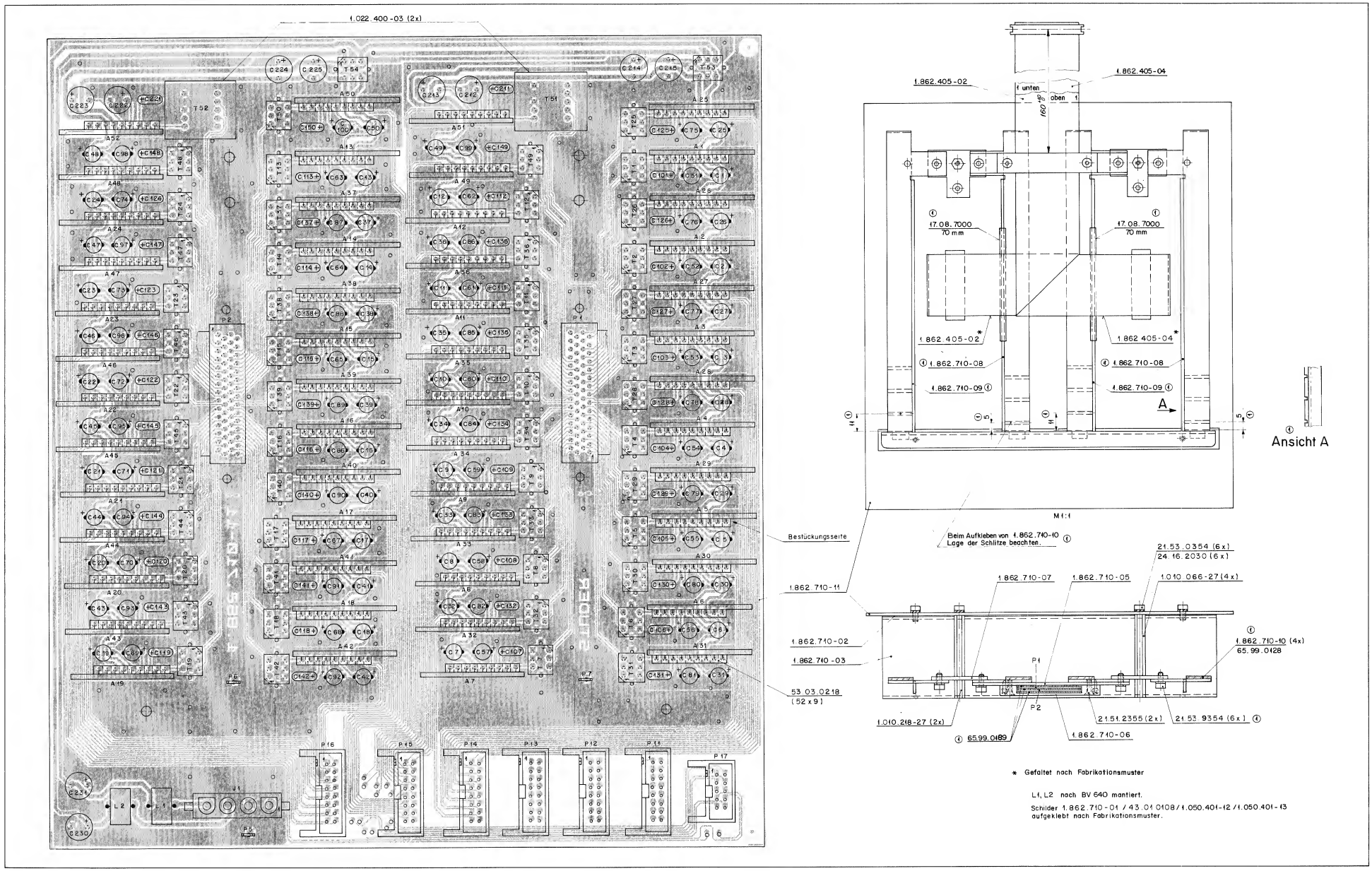

REPRO PREAMPLIFIER 48 CH 1.862.710.00

IND.	POS.NO.	PART NO.	VALUE	SPECIFICATIONS / EQUIVALENT	MANUF.
	A.....1	1.862.749.00		PREAMPLIFIER PCM, 1 CH	St
	A.....2	1.862.749.00		PREAMPLIFIER PCM, 1 CH	St
	A.....3	1.862.749.00		PREAMPLIFIER PCM, 1 CH	St
	A.....4	1.862.749.00		PREAMPLIFIER PCM, 1 CH	St
	A.....5	1.862.749.00		PREAMPLIFIER PCM, 1 CH	St
	A.....6	1.862.749.00		PREAMPLIFIER PCM, 1 CH	St
	A.....7	1.862.749.00		PREAMPLIFIER PCM, 1 CH	St
	A.....8	1.862.749.00		PREAMPLIFIER PCM, 1 CH	St
	A.....9	1.862.749.00		PREAMPLIFIER PCM, 1 CH	St
	A....10	1.862.749.00		PREAMPLIFIER PCM, 1 CH	St
	A....11	1.862.749.00		PREAMPLIFIER PCM, 1 CH	St
	A....12	1.862.749.00		PREAMPLIFIER PCM, 1 CH	St
	A....13	1.862.749.00		PREAMPLIFIER PCM, 1 CH	St
	A....14	1.862.749.00		PREAMPLIFIER PCM, 1 CH	St
	A....15	1.862.749.00		PREAMPLIFIER PCM, 1 CH	St
	A....16	1.862.749.00		PREAMPLIFIER PCM, 1 CH	St
	A....17	1.862.749.00		PREAMPLIFIER PCM, 1 CH	St
	A....18	1.862.749.00		PREAMPLIFIER PCM, 1 CH	St
	A....19	1.862.749.00		PREAMPLIFIER PCM, 1 CH	St
	A....20	1.862.749.00		PREAMPLIFIER PCM, 1 CH	St
	A....21	1.862.749.00		PREAMPLIFIER PCM, 1 CH	St
	A....22	1.862.749.00		PREAMPLIFIER PCM, 1 CH	St
	A....23	1.862.749.00		PREAMPLIFIER PCM, 1 CH	St
	A....24	1.862.749.00		PREAMPLIFIER PCM, 1 CH	St
	A....25	1.862.749.00		PREAMPLIFIER PCM, 1 CH	St
	A....26	1.862.749.00		PREAMPLIFIER PCM, 1 CH	St
	A....27	1.862.749.00		PREAMPLIFIER PCM, 1 CH	St
	A....28	1.862.749.00		PREAMPLIFIER PCM, 1 CH	St
	A....29	1.862.749.00		PREAMPLIFIER PCM, 1 CH	St
	A....30	1.862.749.00		PREAMPLIFIER PCM, 1 CH	St
	A....31	1.862.749.00		PREAMPLIFIER PCM, 1 CH	St
	A....32	1.862.749.00		PREAMPLIFIER PCM, 1 CH	St
	A....33	1.862.749.00		PREAMPLIFIER PCM, 1 CH	St
	A....34	1.862.749.00		PREAMPLIFIER PCM, 1 CH	St
	A....35	1.862.749.00		PREAMPLIFIER PCM, 1 CH	St
	A....36	1.862.749.00		PREAMPLIFIER PCM, 1 CH	St
	A....37	1.862.749.00		PREAMPLIFIER PCM, 1 CH	St

5 T U D E R (01) 89/09/14 ZB REPRO PREAMPLIFIER 48 CH PL 1.862.710.00 PAGE 1

IND.	POS.NO.	PART NO.	VALUE	SPECIFICATIONS / EQUIVALENT	MANUF.
	A....38	1.862.749.00		PREAMPLIFIER PCM, 1 CH	St
	A....39	1.862.749.00		PREAMPLIFIER PCM, 1 CH	St
	A....40	1.862.749.00		PREAMPLIFIER PCM, 1 CH	St
	A....41	1.862.749.00		PREAMPLIFIER PCM, 1 CH	St
	A....42	1.862.749.00		PREAMPLIFIER PCM, 1 CH	St
	A....43	1.862.749.00		PREAMPLIFIER PCM, 1 CH	St
	A....44	1.862.749.00		PREAMPLIFIER PCM, 1 CH	St
	A....45	1.862.749.00		PREAMPLIFIER PCM, 1 CH	St
	A....46	1.862.749.00		PREAMPLIFIER PCM, 1 CH	St
	A....47	1.862.749.00		PREAMPLIFIER PCM, 1 CH	St
	A....48	1.862.749.00		PREAMPLIFIER PCM, 1 CH	St
	A....49	1.862.749.00		PREAMPLIFIER PCM, 1 CH	St
	A....50	1.862.749.00		PREAMPLIFIER PCM, 1 CH	St
	A....51	1.862.750.00		PREAMPLIFIER CUE, 1 CH	St
	A....52	1.862.750.00		PREAMPLIFIER CUE, 1 CH	St
	C.....1	59.26.2100	10uF	-20%, 16V, SAL	Ph
	C.....2	59.26.2100	10uF	-20%, 16V, SAL	Ph
	C.....3	59.26.2100	10uF	-20%, 16V, SAL	Ph
	C.....4	59.26.2100	10uF	-20%, 16V, SAL	Ph
	C.....5	59.26.2100	10uF	-20%, 16V, SAL	Ph
	C.....6	59.26.2100	10uF	-20%, 16V, SAL	Ph
	C.....7	59.26.2100	10uF	-20%, 16V, SAL	Ph
	C.....8	59.26.2100	10uF	-20%, 16V, SAL	Ph
	C.....9	59.26.2100	10uF	-20%, 16V, SAL	Ph
	C....10	59.26.2100	10uF	-20%, 16V, SAL	Ph
	C....11	59.26.2100	10uF	-20%, 16V, SAL	Ph
	C....12	59.26.2100	10uF	-20%, 16V, SAL	Ph
	C....13	59.26.2100	10uF	-20%, 16V, SAL	Ph
	C....14	59.26.2100	10uF	-20%, 16V, SAL	Ph
	C....15	59.26.2100	10uF	-20%, 16V, SAL	Ph
	C....16	59.26.2100	10uF	-20%, 16V, SAL	Ph
	C....17	59.26.2100	10uF	-20%, 16V, SAL	Ph
	C....18	59.26.2100	10uF	-20%, 16V, SAL	Ph
	C....19	59.26.2100	10uF	-20%, 16V, SAL	Ph
	C....20	59.26.2100	10uF	-20%, 16V, SAL	Ph
	C....21	59.26.2100	10uF	-20%, 16V, SAL	Ph

5 T U D E R (01) 89/09/14 ZB REPRO PREAMPLIFIER 48 CH PL 1.862.710.00 PAGE 2

IND.	POS.NO.	PART NO.	VALUE	SPECIFICATIONS / EQUIVALENT	MANUF.
	C....22	59.26.2100	10uF	-20%, 16V, SAL	Ph
	C....23	59.26.2100	10uF	-20%, 16V, SAL	Ph
	C....24	59.26.2100	10uF	-20%, 16V, SAL	Ph
	C....25	59.26.2100	10uF	-20%, 16V, SAL	Ph
	C....26	59.26.2100	10uF	-20%, 16V, SAL	Ph
	C....27	59.26.2100	10uF	-20%, 16V, SAL	Ph
	C....28	59.26.2100	10uF	-20%, 16V, SAL	Ph
	C....29	59.26.2100	10uF	-20%, 16V, SAL	Ph
	C....30	59.26.2100	10uF	-20%, 16V, SAL	Ph
	C....31	59.26.2100	10uF	-20%, 16V, SAL	Ph
	C....32	59.26.2100	10uF	-20%, 16V, SAL	Ph
	C....33	59.26.2100	10uF	-20%, 16V, SAL	Ph
	C....34	59.26.2100	10uF	-20%, 16V, SAL	Ph
	C....35	59.26.2100	10uF	-20%, 16V, SAL	Ph
	C....36	59.26.2100	10uF	-20%, 16V, SAL	Ph
	C....37	59.26.2100	10uF	-20%, 16V, SAL	Ph
	C....38	59.26.2100	10uF	-20%, 16V, SAL	Ph
	C....39	59.26.2100	10uF	-20%, 16V, SAL	Ph
	C....40	59.26.2100	10uF	-20%, 16V, SAL	Ph
	C....41	59.26.2100	10uF	-20%, 16V, SAL	Ph
	C....42	59.26.2100	10uF	-20%, 16V, SAL	Ph
	C....43	59.26.2100	10uF	-20%, 16V, SAL	Ph
	C....44	59.26.2100	10uF	-20%, 16V, SAL	Ph
	C....45	59.26.2100	10uF	-20%, 16V, SAL	Ph
	C....46	59.26.2100	10uF	-20%, 16V, SAL	Ph
	C....47	59.26.2100	10uF	-20%, 16V, SAL	Ph
	C....48	59.26.2100	10uF	-20%, 16V, SAL	Ph
	C....49	59.26.2100	10uF	-20%, 16V, SAL	Ph
	C....50	59.26.2100	10uF	-20%, 16V, SAL	Ph
	C....51	59.26.2100	10uF	-20%, 16V, SAL	Ph
	C....52	59.26.2100	10uF	-20%, 16V, SAL	Ph
	C....53	59.26.2100	10uF	-20%, 16V, SAL	Ph
	C....54	59.26.2100	10uF	-20%, 16V, SAL	Ph
	C....55	59.26.2100	10uF	-20%, 16V, SAL	Ph
	C....56	59.26.2100	10uF	-20%, 16V, SAL	Ph
	C....57	59.26.2100	10uF	-20%, 16V, SAL	Ph
	C....58	59.26.2100	10uF	-20%, 16V, SAL	Ph

5 T U D E R (01) 89/09/14 ZB REPRO PREAMPLIFIER 48 CH PL 1.862.710.00 PAGE 3

IND.	POS.NO.	PART NO.	VALUE	SPECIFICATIONS / EQUIVALENT	MANUF.
	C....59	59.26.2100	10uF	-20%, 16V, SAL	Ph
	C....60	59.26.2100	10uF	-20%, 16V, SAL	Ph
	C....61	59.26.2100	10uF	-20%, 16V, SAL	Ph
	C....62	59.26.2100	10uF	-20%, 16V, SAL	Ph
	C....63	59.26.2100	10uF	-20%, 16V, SAL	Ph
	C....64	59.26.2100	10uF	-20%, 16V, SAL	Ph
	C....65	59.26.2100	10uF	-20%, 16V, SAL	Ph
	C....66	59.26.2100	10uF	-20%, 16V, SAL	Ph
	C....67	59.26.2100	10uF	-20%, 16V, SAL	Ph
	C....68	59.26.2100	10uF	-20%, 16V, SAL	Ph
	C....69	59.26.2100	10uF	-20%, 16V, SAL	Ph
	C....70	59.26.2100	10uF	-20%, 16V, SAL	Ph
	C....71	59.26.2100	10uF	-20%, 16V, SAL	Ph
	C....72	59.26.2100	10uF	-20%, 16V, SAL	Ph
	C....73	59.26.2100	10uF	-20%, 16V, SAL	Ph
	C....74	59.26.2100	10uF	-20%, 16V, SAL	Ph
	C....75	59.26.2100	10uF	-20%, 16V, SAL	Ph
	C....76	59.26.2100	10uF	-20%, 16V, SAL	Ph
	C....77	59.26.2100	10uF	-20%, 16V, SAL	Ph
	C....78	59.26.2100	10uF	-20%, 16V, SAL	Ph
	C....79	59.26.2100	10uF	-20%, 16V, SAL	Ph
	C....80	59.26.2100	10uF	-20%, 16V, SAL	Ph
	C....81	59.26.2100	10uF	-20%, 16V, SAL	Ph
	C....82	59.26.2100	10uF	-20%, 16V, SAL	Ph
	C....83	59.26.2100	10uF	-20%, 16V, SAL	Ph
	C....84	59.26.2100	10uF	-20%, 16V, SAL	Ph
	C....85	59.26.2100	10uF	-20%, 16V, SAL	Ph
	C....86	59.26.2100	10uF	-20%, 16V, SAL	Ph
	C....87	59.26.2100	10uF	-20%, 16V, SAL	Ph
	C....88	59.26.2100	10uF	-20%, 16V, SAL	Ph
	C....89	59.26.2100	10uF	-20%, 16V, SAL	Ph
	C....90	59.26.2100	10uF	-20%, 16V, SAL	Ph
	C....91	59.26.2100	10uF	-20%, 16V, SAL	Ph
	C....92	59.26.2100	10uF	-20%, 16V, SAL	Ph
	C....93	59.26.2100	10uF	-20%, 16V, SAL	Ph
	C....94	59.26.2100	10uF	-20%, 16V, SAL	Ph
	C....95	59.26.2100	10uF	-20%, 16V, SAL	Ph

5 T U D E R (01) 89/09/14 ZB REPRO PREAMPLIFIER 48 CH PL 1.862.710.00 PAGE 4

IND.	POS.NO.	PART NO.	VALUE	SPECIFICATIONS / EQUIVALENT	MANUF.
	C....96	59.26.2100	10uF	-20%, 16V, SAL	Ph
	C....97	59.26.2100	10uF	-20%, 16V, SAL	Ph
	C....98	59.26.2100	10uF	-20%, 16V, SAL	Ph
	C....99	59.26.2100	10uF	-20%, 16V, SAL	Ph
	C...100	59.26.2100	10uF	-20%, 16V, SAL	Ph
	C...101	59.26.2100	10uF	-20%, 6.3V, SAL	Ph
	C...102	59.26.2100	10uF	-20%, 6.3V, SAL	Ph
	C...103	59.26.2100	10uF	-20%, 6.3V, SAL	Ph
	C...104	59.26.2100	10uF	-20%, 6.3V, SAL	Ph
	C...105	59.26.2100	10uF	-20%, 6.3V, SAL	Ph
	C...106	59.26.2100	10uF	-20%, 6.3V, SAL	Ph
	C...107	59.26.2100	10uF	-20%, 6.3V, SAL	Ph
	C...108	59.26.2100	10uF	-20%, 6.3V, SAL	Ph
	C...109	59.26.2100	10uF	-20%, 6.3V, SAL	Ph
	C...110	59.26.2100	10uF	-20%, 6.3V, SAL	Ph
	C...111	59.26.2100	10uF	-20%, 6.3V, SAL	Ph
	C...112	59.26.2100	10uF	-20%, 6.3V, SAL	Ph
	C...113	59.26.2100	10uF	-20%, 6.3V, SAL	Ph
	C...114	59.26.2100	10uF	-20%, 6.3V, SAL	Ph
	C...115	59.26.2100	10uF	-20%, 6.3V, SAL	Ph
	C...116	59.26.2100	10uF	-20%, 6.3V, SAL	Ph
	C...117	59.26.2100	10uF	-20%, 6.3V, SAL	Ph
	C...118	59.26.2100	10uF	-20%, 6.3V, SAL	Ph
	C...119	59.26.2100	10uF	-20%, 6.3V, SAL	Ph
	C...120	59.26.2100	10uF	-20%, 6.3V, SAL	Ph
	C...121	59.26.2100	10uF	-20%, 6.3V, SAL	Ph
	C...122	59.26.2100	10uF	-20%, 6.3V, SAL	Ph
	C...123	59.26.2100	10uF	-20%, 6.3V, SAL	Ph
	C...124	59.26.2100	10uF	-20%, 6.3V, SAL	Ph
	C...125	59.26.2100	10uF	-20%, 6.3V, SAL	Ph
	C...126	59.26.2100	10uF	-20%, 6.3V, SAL	Ph
	C...127	59.26.2100	10uF	-20%, 6.3V, SAL	Ph
	C...128	59.26.2100	10uF	-20%, 6.3V, SAL	Ph
	C...129	59.26.2100	10uF	-20%, 6.3V, SAL	Ph
	C...130	59.26.2100	10uF	-20%, 6.3V, SAL	Ph
	C...131	59.26.2100	10uF	-20%, 6.3V, SAL	Ph
	C...132	59.26.2100	10uF	-20%, 6.3V, SAL	Ph

5 T U D E R (01) 89/09/14 ZB REPRO PREAMPLIFIER 48 CH PL 1.862.710.00 PAGE 5

IND.	POS.NO.	PART NO.	VALUE	SPECIFICATIONS / EQUIVALENT	MANUF.
	C...133	59.26.2100	10uF	-20%, 6.3V, SAL	Ph
	C...134	59.26.2100	10uF	-20%, 6.3V, SAL	Ph
	C...135	59.26.2100	10uF	-20%, 6.3V, SAL	Ph
	C...136	59.26.2100	10uF	-20%, 6.3V, SAL	Ph
	C...137	59.26.2100	10uF	-20%, 6.3V, SAL	Ph
	C...138	59.26.2100	10uF	-20%, 6.3V, SAL	Ph
	C...139	59.26.2100	10uF	-20%, 6.3V, SAL	Ph
	C...140	59.26.2100	10uF	-20%, 6.3V, SAL	Ph
	C...141	59.26.2100	10uF	-20%, 6.3V, SAL	Ph
	C...142	59.26.2100	10uF	-20%, 6.3V, SAL	Ph
	C...143	59.26.2100	10uF	-20%, 6.3V, SAL	Ph
	C...144	59.26.2100	10uF	-20%, 6.3V, SAL	Ph
	C...145	59.26.2100	10uF	-20%, 6.3V, SAL	Ph
	C...146	59.26.2100	10uF	-20%, 6.3V, SAL	Ph
	C...147	59.26.2100	10uF	-20%, 6.3V, SAL	Ph
	C...148	59.26.2100	10uF	-20%, 6.3V, SAL	Ph
	C...149	59.26.0680	68uF	-20%, 6.3V, SAL	Ph
	C...150	59.26.0680	68uF	-20%, 6.3V, SAL	Ph
	C...211	59.26.0680	68uF	-20%, 6.3V, SAL	Ph
	C...212	59.22.4221	220uF	-20%, 16V, EL	
	C...213	59.22.4221	220uF	-20%, 16V, EL	
	C...214	59.22.5101	100uF	-20%, 25V, EL	
	C...215	59.22.5101	100uF	-20%, 25V, EL	
	C...221	59.26.0680	68uF	-20%, 6.3V, SAL	Ph
	C...222	59.22.4221	220uF	-20%, 16V, EL	
	C...223	59.22.4221	220uF	-20%, 16V, EL	
	C...224	59.22.5101	100uF	-20%, 25V, EL	
	C...225	59.22.5101	100uF	-20%, 25V, EL	
	C...230	59.22.5101	100uF	-20%, 25V, EL	
	C...231	59.22.5101	100uF	-20%, 25V, EL	
	J.....1	54.25.0004	Connector	4 contacts	AMP
	L.....1	62.03.0010	48 uH	2 A, Tokin nr. SN - 5 - 400	
	L.....2	62.03.0010	48 uH	2 A, Tokin nr. SN - 5 - 400	
	P.....1	1.862.405.04		Connection cable	St

5 T U D E R (01) 89/09/14 ZB REPRO PREAMPLIFIER 48 CH PL 1.862.710.00 PAGE 6

REPRO PREAMPLIFIER 48 CH 1.862.710.00

IND.	POS.NO.	PART NO.	VALUE	SPECIFICATIONS / EQUIVALENT	MANUF.
	P.....2	1.862.405.02		Connection cable	St
	P.....5	54.02.0320		Faston connector, 2.8x0.8, straight	
	P.....6	54.02.0320		Faston connector, 2.8x0.8, straight	
	P.....7	54.02.0320		Faston connector, 2.8x0.8, straight	
(00)	P....11	54.14.2002	Connector	16 contacts, flat cable	
(01)	P....11	54.14.2102	Connector	16 contacts, latch, flat cable	
(00)	P....12	54.14.2002	Connector	16 contacts, flat cable	
(01)	P....12	54.14.2102	Connector	16 contacts, latch, flat cable	
(00)	P....13	54.14.2002	Connector	16 contacts, flat cable	
(01)	P....13	54.14.2102	Connector	16 contacts, latch, flat cable	
(00)	P....14	54.14.2002	Connector	16 contacts, flat cable	
(01)	P....14	54.14.2102	Connector	16 contacts, latch, flat cable	
(00)	P....15	54.14.2002	Connector	16 contacts, flat cable	
(01)	P....15	54.14.2102	Connector	16 contacts, latch, flat cable	
(00)	P....16	54.14.2002	Connector	16 contacts, flat cable	
(01)	P....16	54.14.2102	Connector	16 contacts, latch, flat cable	
(00)	P....17	54.14.2001	Connector	10 contacts, flat cable	
(01)	P....17	54.14.2101	Connector	10 contacts, latch, flat cable	
	T.....1	1.022.607.00		Head Transformer Audio Data	St
	T.....2	1.022.607.00		Head Transformer Audio Data	St
	T.....3	1.022.607.00		Head Transformer Audio Data	St
	T.....4	1.022.607.00		Head Transformer Audio Data	St
	T.....5	1.022.607.00		Head Transformer Audio Data	St
	T.....6	1.022.607.00		Head Transformer Audio Data	St
	T.....7	1.022.607.00		Head Transformer Audio Data	St
	T.....8	1.022.607.00		Head Transformer Audio Data	St
	T.....9	1.022.607.00		Head Transformer Audio Data	St
	T....10	1.022.607.00		Head Transformer Audio Data	St
	T....11	1.022.607.00		Head Transformer Audio Data	St
	T....12	1.022.607.00		Head Transformer Audio Data	St
	T....13	1.022.607.00		Head Transformer Audio Data	St
	T....14	1.022.607.00		Head Transformer Audio Data	St
	T....15	1.022.607.00		Head Transformer Audio Data	St
	T....16	1.022.607.00		Head Transformer Audio Data	St
	T....17	1.022.607.00		Head Transformer Audio Data	St
	T....18	1.022.607.00		Head Transformer Audio Data	St

IND.	POS.NO.	PART NO.	VALUE	SPECIFICATIONS / EQUIVALENT	MANUF.
	T....19	1.022.607.00		Head Transformer Audio Data	St
	T....20	1.022.607.00		Head Transformer Audio Data	St
	T....21	1.022.607.00		Head Transformer Audio Data	St
	T....22	1.022.607.00		Head Transformer Audio Data	St
	T....23	1.022.607.00		Head Transformer Audio Data	St
	T....24	1.022.607.00		Head Transformer Audio Data	St
	T....25	1.022.607.00		Head Transformer Audio Data	St
	T....26	1.022.607.00		Head Transformer Audio Data	St
	T....27	1.022.607.00		Head Transformer Audio Data	St
	T....28	1.022.607.00		Head Transformer Audio Data	St
	T....29	1.022.607.00		Head Transformer Audio Data	St
	T....30	1.022.607.00		Head Transformer Audio Data	St
	T....31	1.022.607.00		Head Transformer Audio Data	St
	T....32	1.022.607.00		Head Transformer Audio Data	St
	T....33	1.022.607.00		Head Transformer Audio Data	St
	T....34	1.022.607.00		Head Transformer Audio Data	St
	T....35	1.022.607.00		Head Transformer Audio Data	St
	T....36	1.022.607.00		Head Transformer Audio Data	St
	T....37	1.022.607.00		Head Transformer Audio Data	St
	T....38	1.022.607.00		Head Transformer Audio Data	St
	T....39	1.022.607.00		Head Transformer Audio Data	St
	T....40	1.022.607.00		Head Transformer Audio Data	St
	T....41	1.022.607.00		Head Transformer Audio Data	St
	T....42	1.022.607.00		Head Transformer Audio Data	St
	T....43	1.022.607.00		Head Transformer Audio Data	St
	T....44	1.022.607.00		Head Transformer Audio Data	St
	T....45	1.022.607.00		Head Transformer Audio Data	St
	T....46	1.022.607.00		Head Transformer Audio Data	St
	T....47	1.022.607.00		Head Transformer Audio Data	St
	T....48	1.022.607.00		Head Transformer Audio Data	St
	T....49	1.022.610.00		Head Transformer Time Code	St
	T....50	1.022.607.00		Head Transformer Audio Data	St
	T....51	1.022.457.00		Head Transformer Cue Track	St
	T....52	1.022.457.00		Head Transformer Cue Track	St
	T....53	1.022.630.00		Common Mode Choke	St
	T....54	1.022.630.00		Common Mode Choke	St

IND.	POS.NO.	PART NO.	VALUE	SPECIFICATIONS / EQUIVALENT	MANUF.

(01) 14.09.89 Connectors P11 to P17 with retaining latches.

EL=Electrolytic, PETP=Polyesterfilm, SAL=Solid Aluminium.

MANUFACTURER: AMP=AMP Incorporated, Ph=Philips, St=Studer

ORIG 89/05/09 (01) 89/09/14

BLOCK DIAGRAM RECORD AMPLIFIER 48 CH

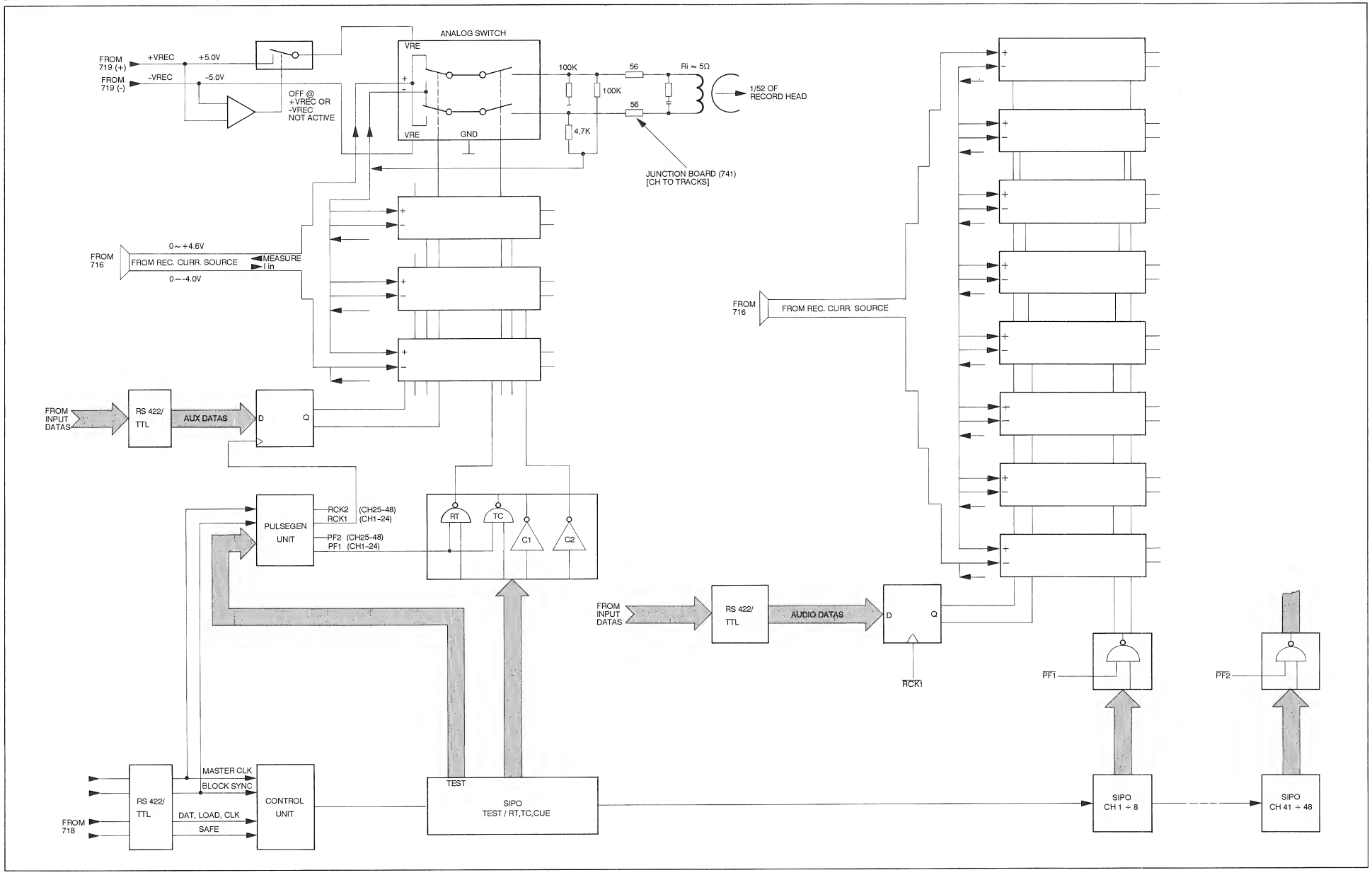

RECORD AMPLIFIER 48 CH 1.862.712.20

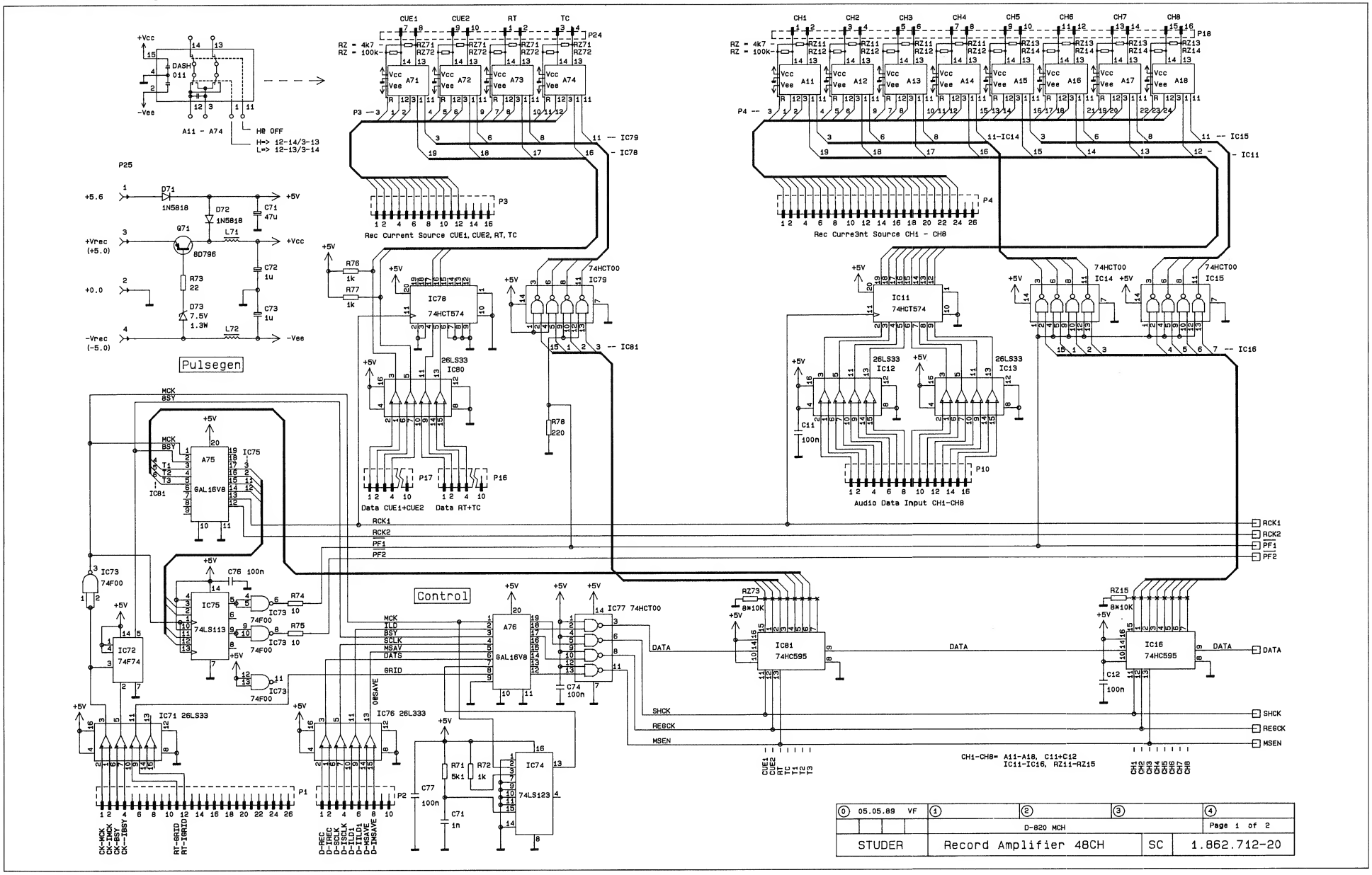

RECORD AMPLIFIER 48 CH 1.862.712.20

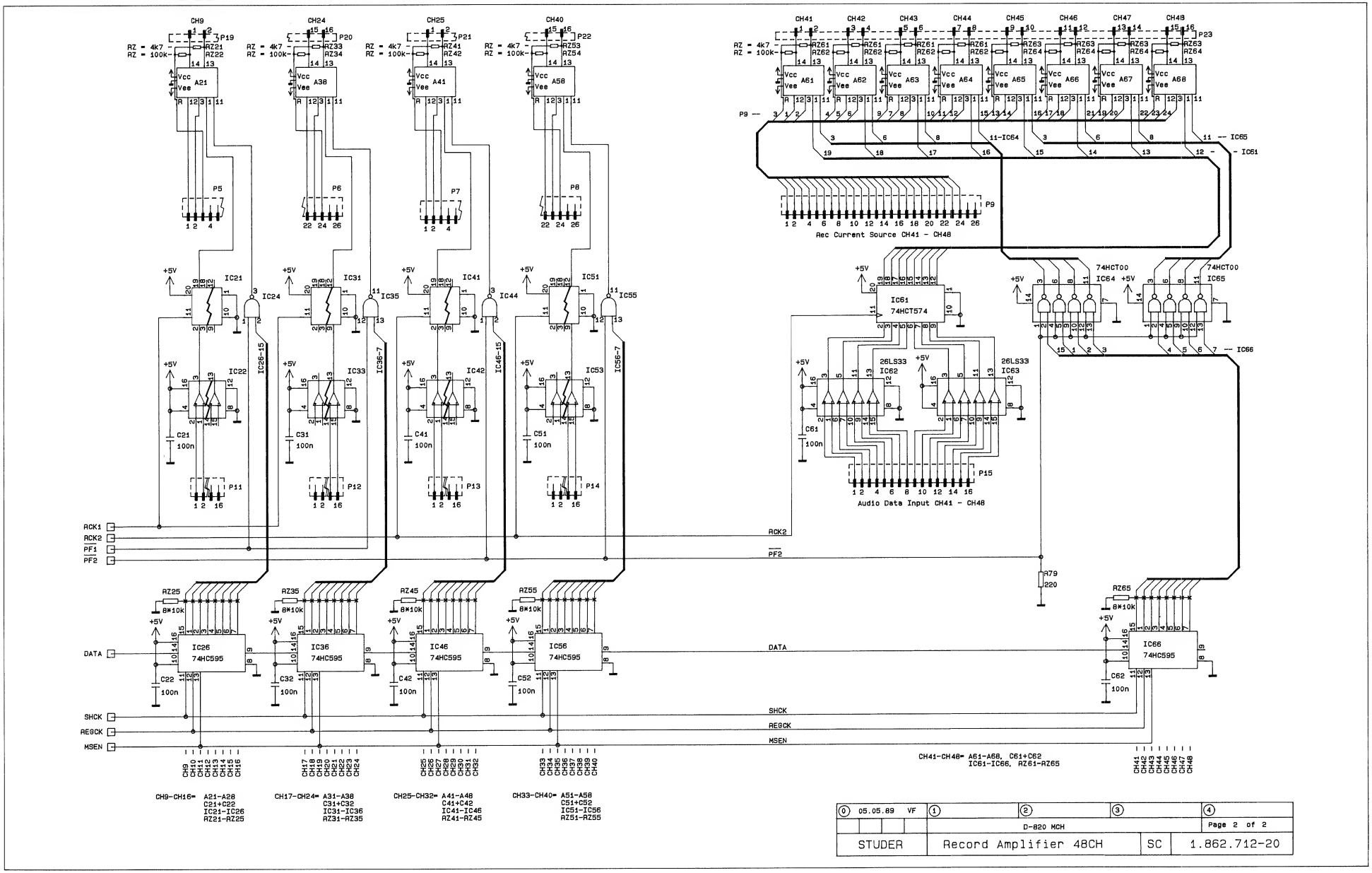

RECORD AMPLIFIER 48 CH 1.862.712.20

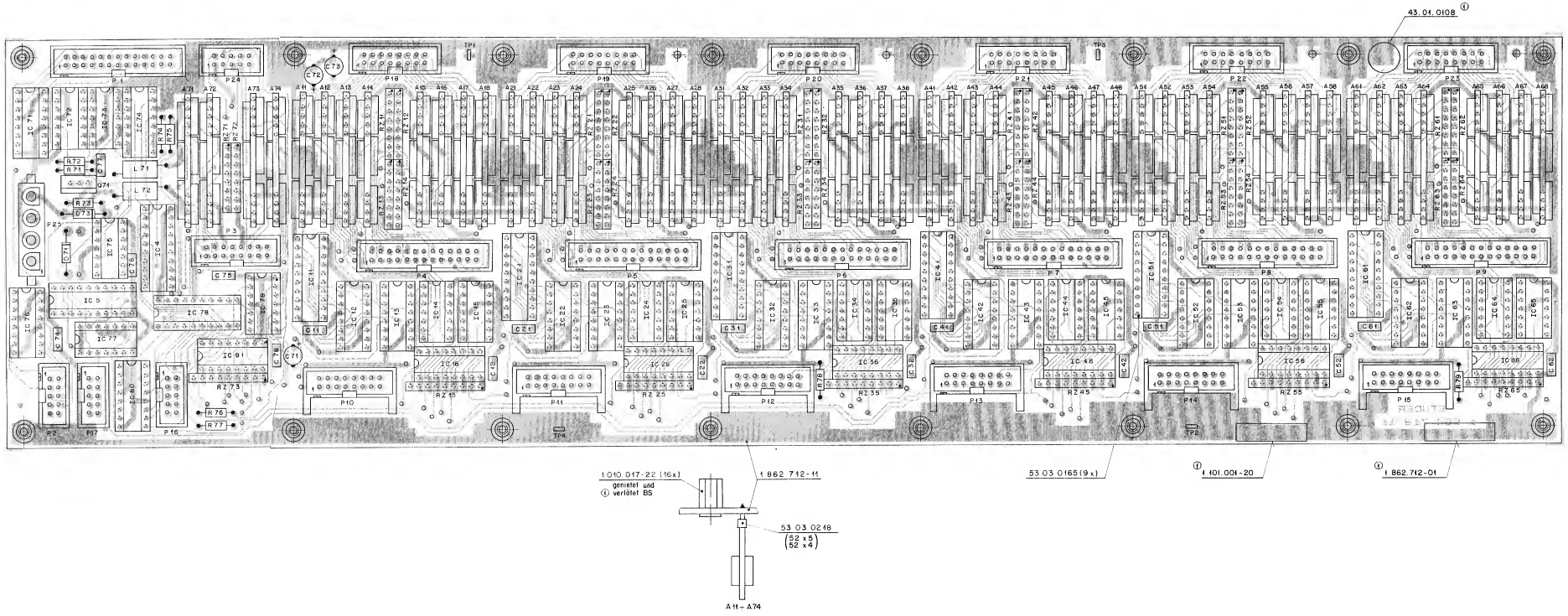

IND.	POS.NO.	PART NO.	VALUE	SPECIFICATIONS / EQUIVALENT	MANUF.
	A....11	1.862.740.00		RECORD CURRENT SWITCH, SEE NOTE 1	
	A....12	1.862.740.00		RECORD CURRENT SWITCH, SEE NOTE 1	
	A....13	1.862.740.00		RECORD CURRENT SWITCH, SEE NOTE 1	
	A....14	1.862.740.00		RECORD CURRENT SWITCH, SEE NOTE 1	
	A....15	1.862.740.00		RECORD CURRENT SWITCH, SEE NOTE 1	
	A....16	1.862.740.00		RECORD CURRENT SWITCH, SEE NOTE 1	
	A....17	1.862.740.00		RECORD CURRENT SWITCH, SEE NOTE 1	
	A....18	1.862.740.00		RECORD CURRENT SWITCH, SEE NOTE 1	
	A....21	1.862.740.00		RECORD CURRENT SWITCH, SEE NOTE 1	
	A....22	1.862.740.00		RECORD CURRENT SWITCH, SEE NOTE 1	
	A....23	1.862.740.00		RECORD CURRENT SWITCH, SEE NOTE 1	
	A....24	1.862.740.00		RECORD CURRENT SWITCH, SEE NOTE 1	
	A....25	1.862.740.00		RECORD CURRENT SWITCH, SEE NOTE 1	
	A....26	1.862.740.00		RECORD CURRENT SWITCH, SEE NOTE 1	
	A....27	1.862.740.00		RECORD CURRENT SWITCH, SEE NOTE 1	
	A....28	1.862.740.00		RECORD CURRENT SWITCH, SEE NOTE 1	
	A....31	1.862.740.00		RECORD CURRENT SWITCH, SEE NOTE 1	
	A....32	1.862.740.00		RECORD CURRENT SWITCH, SEE NOTE 1	
	A....33	1.862.740.00		RECORD CURRENT SWITCH, SEE NOTE 1	
	A....34	1.862.740.00		RECORD CURRENT SWITCH, SEE NOTE 1	
	A....35	1.862.740.00		RECORD CURRENT SWITCH, SEE NOTE 1	
	A....36	1.862.740.00		RECORD CURRENT SWITCH, SEE NOTE 1	
	A....37	1.862.740.00		RECORD CURRENT SWITCH, SEE NOTE 1	
	A....38	1.862.740.00		RECORD CURRENT SWITCH, SEE NOTE 1	
	A....41	1.862.740.00		RECORD CURRENT SWITCH, SEE NOTE 1	
	A....42	1.862.740.00		RECORD CURRENT SWITCH, SEE NOTE 1	
	A....43	1.862.740.00		RECORD CURRENT SWITCH, SEE NOTE 1	
	A....44	1.862.740.00		RECORD CURRENT SWITCH, SEE NOTE 1	
	A....45	1.862.740.00		RECORD CURRENT SWITCH, SEE NOTE 1	
	A....46	1.862.740.00		RECORD CURRENT SWITCH, SEE NOTE 1	
	A....47	1.862.740.00		RECORD CURRENT SWITCH, SEE NOTE 1	
	A....48	1.862.740.00		RECORD CURRENT SWITCH, SEE NOTE 1	
	A....51	1.862.740.00		RECORD CURRENT SWITCH, SEE NOTE 1	
	A....52	1.862.740.00		RECORD CURRENT SWITCH, SEE NOTE 1	
	A....53	1.862.740.00		RECORD CURRENT SWITCH, SEE NOTE 1	
	A....54	1.862.740.00		RECORD CURRENT SWITCH, SEE NOTE 1	
	A....55	1.862.740.00		RECORD CURRENT SWITCH, SEE NOTE 1	

IND.	POS.NO.	PART NO.	VALUE	SPECIFICATIONS / EQUIVALENT	MANUF.
	A....56	1.862.740.00		RECORD CURRENT SWITCH, SEE NOTE 1	
	A....57	1.862.740.00		RECORD CURRENT SWITCH, SEE NOTE 1	
	A....58	1.862.740.00		RECORD CURRENT SWITCH, SEE NOTE 1	
	A....61	1.862.740.00		RECORD CURRENT SWITCH, SEE NOTE 1	
	A....62	1.862.740.00		RECORD CURRENT SWITCH, SEE NOTE 1	
	A....63	1.862.740.00		RECORD CURRENT SWITCH, SEE NOTE 1	
	A....64	1.862.740.00		RECORD CURRENT SWITCH, SEE NOTE 1	
	A....65	1.862.740.00		RECORD CURRENT SWITCH, SEE NOTE 1	
	A....66	1.862.740.00		RECORD CURRENT SWITCH, SEE NOTE 1	
	A....67	1.862.740.00		RECORD CURRENT SWITCH, SEE NOTE 1	
	A....68	1.862.740.00		RECORD CURRENT SWITCH, SEE NOTE 1	
	A....71	1.862.740.00		RECORD CURRENT SWITCH, SEE NOTE 1	
	A....72	1.862.740.00		RECORD CURRENT SWITCH, SEE NOTE 1	
	A....73	1.862.740.00		RECORD CURRENT SWITCH, SEE NOTE 1	
	A....74	1.862.740.00		RECORD CURRENT SWITCH, SEE NOTE 1	
	C....11	59.06.0104	100 nF	10%, 63V , PETP	
	C....12	59.06.0104	100 nF	10%, 63V , PETP	
	C....21	59.06.0104	100 nF	10%, 63V , PETP	
	C....22	59.06.0104	100 nF	10%, 63V , PETP	
	C....31	59.06.0104	100 nF	10%, 63V , PETP	
	C....32	59.06.0104	100 nF	10%, 63V , PETP	
	C....41	59.06.0104	100 nF	10%, 63V , PETP	
	C....42	59.06.0104	100 nF	10%, 63V , PETP	
	C....51	59.06.0104	100 nF	10%, 63V , PETP	
	C....52	59.06.0104	100 nF	10%, 63V , PETP	
	C....61	59.06.0104	100 nF	10%, 63V , PETP	
	C....62	59.06.0104	100 nF	10%, 63V , PETP	
	C....71	59.22.9470	47 uF	20%, 10V , E1	
	C....72	59.22.8109	1 uF	20%, 63V , E1	
	C....73	59.22.8109	1 uF	20%, 63V , E1	
	C....74	59.06.0104	100 nF	10%, 63V , PETP	
	C....75	59.06.0104	100 nF	10%, 63V , PETP	
(00)	C....76	59.06.0102	1 nF	10%, 63V , PETP	
(02)	C....76	59.06.0104	100 nF	10%, 63V , PETP	
(00)	C....77	59.06.0104	100 nF	10%, 63V , PETP	
(02)	C....77	59.06.0102	1 nF	10%, 63V , PETP	

IND.	POS.NO.	PART NO.	VALUE	SPECIFICATIONS / EQUIVALENT	MANUF.
	C....78	59.06.0104	100 nF	10%, 63V , PETP	
	D....71	50.04.0512	1N 5818	1N 5819	Mot
(00)	D....72	50.04.0512	1N 5818	1N 5819	Mot
(01)	D....72			NOT USED	
	D....73	50.04.1503	7.5 V Z	BZX 85 C 7V5	ITT,Mot,Ph,Tf,SGS,Tho
	IC....4	1.862.799.20		PULSEGEN RECORD AMPLIFIER	ST
	IC....5	1.862.798.20		CONTROL RECORD AMPLIFIER	ST
	IC...11	50.17.0574	CD74HCT574	.. 74 HCT 574 .	Ph,RCA,SGS,TI,Tho
	IC...12	50.15.0109	AM26LS33PC	DS 26 LS 33 CN	AMD,NS
	IC...13	50.15.0109	AM26LS33PC	DS 26 LS 33 CN	AMD,NS
	IC...14	50.17.0000	CD74HCT00E	.. 74 HCT 00 .	Mot,NS,Ph,RCA
	IC...15	50.17.0000	CD74HCT00E	.. 74 HCT 00 .	Mot,NS,Ph,RCA
	IC...16	50.17.1595	M74 HC 595	.. 74 HC 595	NS,SGS,TI
	IC...21	50.17.0574	CD74HCT574	.. 74 HCT 574 .	Ph,RCA,SGS,TI,Tho
	IC...22	50.15.0109	AM26LS33PC	DS 26 LS 33 CN	AMD,NS
	IC...23	50.15.0109	AM26LS33PC	DS 26 LS 33 CN	AMD,NS
	IC...24	50.17.0000	CD74HCT00E	.. 74 HCT 00 .	Mot,NS,Ph,RCA
	IC...25	50.17.0000	CD74HCT00E	.. 74 HCT 00 .	Mot,NS,Ph,RCA
	IC...26	50.17.1595	MM 74HC595	SN 74 HC 595, M 74 HC 595	NS,SGS,TI
	IC...31	50.17.0574	CD74HCT574	.. 74 HCT 574 .	Ph,RCA,SGS,TI,Tho
	IC...32	50.15.0109	AM26LS33PC	DS 26 LS 33 CN	AMD,NS
	IC...33	50.15.0109	AM26LS33PC	DS 26 LS 33 CN	AMD,NS
	IC...34	50.17.0000	CD74HCT00E	.. 74 HCT 00 .	Mot,NS,Ph,RCA
	IC...35	50.17.0000	CD74HCT00E	.. 74 HCT 00 .	Mot,NS,Ph,RCA
	IC...36	50.17.1595	MM 74HC595	SN 74 HC 595, M 74 HC 595	NS,SGS,TI
	IC...41	50.17.0574	CD74HCT574	.. 74 HCT 574 .	Ph,RCA,SGS,TI,Tho
	IC...42	50.15.0109	AM26LS33PC	DS 26 LS 33 CN	AMD,NS
	IC...43	50.15.0109	AM26LS33PC	DS 26 LS 33 CN	AMD,NS
	IC...44	50.17.0000	CD74HCT00E	.. 74 HCT 00 .	Mot,NS,Ph,RCA
	IC...45	50.17.0000	CD74HCT00E	.. 74 HCT 00 .	Mot,NS,Ph,RCA
	IC...46	50.17.1595	MM 74HC595	SN 74 HC 595, M 74 HC 595	NS,SGS,TI
	IC...51	50.17.0574	CD74HCT574	.. 74 HCT 574 .	Ph,RCA,SGS,TI,Tho
	IC...52	50.15.0109	AM26LS33PC	DS 26 LS 33 CN	AMD,NS
	IC...53	50.15.0109	AM26LS33PC	DS 26 LS 33 CN	AMD,NS
	IC...54	50.17.0000	CD74HCT00E	.. 74 HCT 00 .	Mot,NS,Ph,RCA

IND.	POS.NO.	PART NO.	VALUE	SPECIFICATIONS / EQUIVALENT	MANUF.
	IC...55	50.17.0000	CD74HCT00E	.. 74 HCT 00 .	Mot,NS,Ph,RCA
	IC...56	50.17.1595	MM 74HC595	SN 74 HC 595, M 74 HC 595	NS,SGS,TI
	IC...61	50.17.0574	CD74HCT574	.. 74 HCT 574 .	Ph,RCA,SGS,TI,Tho
	IC...62	50.15.0109	AM26LS33PC	DS 26 LS 33 CN	AMD,NS
	IC...63	50.15.0109	AM26LS33PC	DS 26 LS 33 CN	AMD,NS
	IC...64	50.17.0000	CD74HCT00E	.. 74 HCT 00 .	Mot,NS,Ph,RCA
	IC...65	50.17.0000	CD74HCT00E	.. 74 HCT 00 .	Mot,NS,Ph,RCA
	IC...66	50.17.1595	MM 74HC595	SN 74 HC 595, M 74 HC 595	NS,SGS,TI
	IC...71	50.15.0109	AM26LS33PC	DS 26 LS 33 CN	AMD,NS
	IC...72	50.21.0074	74 F 74 PC	MC 74 F 74 N	Fe,Mot
	IC...73	50.21.0000	74 F 00 PC	MC 74 F 00 N	Fe,Mot
	IC...74	50.06.0123	SN74LS123N		Mot,TI
	IC...75	50.06.0113	N 74LS113N	SN 74 LS 113 N	Sig,TI
	IC...76	50.15.0109	AM26LS33PC	DS 26 LS 33 CN	AMD,NS
	IC...77	50.17.0000	CD74HCT00E	.. 74 HCT 00 .	Mot,NS,Ph,RCA
	IC...78	50.17.0574	CD74HCT574	.. 74 HCT 574 .	Ph,RCA,SGS,TI,Tho
	IC...79	50.17.0000	CD74HCT00E	.. 74 HCT 00 .	Mot,NS,Ph,RCA
	IC...80	50.15.0109	AM26LS33PC	DS 26 LS 33 CN	AMD,NS
	IC...81	50.17.1595	MM 74HC595	SN 74 HC 595, M 74 HC 595	NS,SGS,TI
	L....71	62.01.0115		HF Coil, Philips nr. 4312 020 36700	
	L....72	62.01.0115		HF Coil, Philips nr. 4312 020 36700	
	P....1	54.14.2003	Connector	26 Contacts, Flat Cable	
	P....2	54.14.2001	Connector	10 Contacts, Flat Cable	
	P....3	54.14.2002	Connector	16 Contacts, Flat Cable	
	P....4	54.14.2003	Connector	26 Contacts, Flat Cable	
	P....5	54.14.2003	Connector	26 Contacts, Flat Cable	
	P....6	54.14.2003	Connector	26 Contacts, Flat Cable	
	P....7	54.14.2003	Connector	26 Contacts, Flat Cable	
	P....8	54.14.2003	Connector	26 Contacts, Flat Cable	
	P....9	54.14.2003	Connector	26 Contacts, Flat Cable	
	P....10	54.14.2102	Connector	16 Contacts, Latch, Flat Cable	
	P....11	54.14.2102	Connector	16 Contacts, Latch, Flat Cable	
	P....12	54.14.2102	Connector	16 Contacts, Latch, Flat Cable	
	P....13	54.14.2102	Connector	16 Contacts, Latch, Flat Cable	
	P....14	54.14.2102	Connector	16 Contacts, Latch, Flat Cable	

RECORD AMPLIFIER 48 CH 1.862.712.20

IND.	POS.NO.	PART NO.	VALUE	SPECIFICATIONS / EQUIVALENT	MANUF.
	P....15	54.14.2102	Connector	16 Contacts, Latch, Flat Cable	
	P....16	54.14.2001	Connector	10 Contacts, Flat Cable	
	P....17	54.14.2001	Connector	10 Contacts, Flat Cable	
	P....18	54.14.2002	Connector	16 Contacts, Flat Cable	
	P....19	54.14.2002	Connector	16 Contacts, Flat Cable	
	P....20	54.14.2002	Connector	16 Contacts, Flat Cable	
	P....21	54.14.2002	Connector	16 Contacts, Flat Cable	
	P....22	54.14.2002	Connector	16 Contacts, Flat Cable	
	P....23	54.14.2002	Connector	16 Contacts, Flat Cable	
	P....24	54.14.2001	Connector	10 Contacts, Flat Cable	
	P....25	54.25.0004	Connector	4 Contacts	AMP
	Q....71	50.03.0488	BD 798		Mot
	R....71	57.11.3512	5.1 kOhm	1%	
	R....72	57.11.3102	1 kOhm	1%	
	R....73	57.11.3220	22 Ohm	1%	
	R....74	57.11.3100	10 Ohm	1%	
	R....75	57.11.3100	10 Ohm	1%	
	R....76	57.11.3102	1 kOhm	1%	
	R....77	57.11.3102	1 kOhm	1%	
	R....78	57.11.3221	220 Ohm	1%	
	R....79	57.11.3221	220 Ohm	1%	
	RZ...11	57.88.2472	4*4,7 kOhm	2% SIP 8	
	RZ...12	57.88.2104	4*100 kOhm	2% SIP 8	
	RZ...13	57.88.2472	4*4,7 kOhm	2% SIP 8	
	RZ...14	57.88.2104	4*100 kOhm	2% SIP 8	
	RZ...15	57.88.4103	8* 10 kOhm	2% SIP 9	
	RZ...21	57.88.2472	4*4,7 kOhm	2% SIP 8	
	RZ...22	57.88.2104	4*100 kOhm	2% SIP 8	
	RZ...23	57.88.2472	4*4,7 kOhm	2% SIP 8	
	RZ...24	57.88.2104	4*100 kOhm	2% SIP 8	
	RZ...25	57.88.4103	8* 10 kOhm	2% SIP 9	
	RZ...31	57.88.2472	4*4,7 kOhm	2% SIP 8	
	RZ...32	57.88.2104	4*100 kOhm	2% SIP 8	
	RZ...33	57.88.2472	4*4,7 kOhm	2% SIP 8	

IND.	POS.NO.	PART NO.	VALUE	SPECIFICATIONS / EQUIVALENT	MANUF.
	RZ...34	57.88.2104	4*100 kOhm	2% SIP 8	
	RZ...35	57.88.4103	8* 10 kOhm	2% SIP 9	
	RZ...41	57.88.2472	4*4,7 kOhm	2% SIP 8	
	RZ...42	57.88.2104	4*100 kOhm	2% SIP 8	
	RZ...43	57.88.2472	4*4,7 kOhm	2% SIP 8	
	RZ...44	57.88.2104	4*100 kOhm	2% SIP 8	
	RZ...45	57.88.4103	8* 10 kOhm	2% SIP 9	
	RZ...51	57.88.2472	4*4,7 kOhm	2% SIP 8	
	RZ...52	57.88.2104	4*100 kOhm	2% SIP 8	
	RZ...53	57.88.2472	4*4,7 kOhm	2% SIP 8	
	RZ...54	57.88.2104	4*100 kOhm	2% SIP 8	
	RZ...55	57.88.4103	8* 10 kOhm	2% SIP 9	
	RZ...61	57.88.2472	4*4,7 kOhm	2% SIP 8	
	RZ...62	57.88.2104	4*100 kOhm	2% SIP 8	
	RZ...63	57.88.2472	4*4,7 kOhm	2% SIP 8	
	RZ...64	57.88.2104	4*100 kOhm	2% SIP 8	
	RZ...65	57.88.4103	8* 10 kOhm	2% SIP 9	
	RZ...71	57.88.2472	4*4,7 kOhm	2% SIP 8	
	RZ...72	57.88.2104	4*100 kOhm	2% SIP 8	
	RZ...73	57.88.4103	8* 10 kOhm	2% SIP 9	
	TP....1	54.02.0320	FLACH	2.8*0.8, GERADE	
	TP....2	54.02.0320	FLACH	2.8*0.8, GERADE	
	TP....3	54.02.0320	FLACH	2.8*0.8, GERADE	
	TP....4	54.02.0320	FLACH	2.8*0.8, GERADE	

IND.	POS.NO.	PART NO.	VALUE	SPECIFICATIONS / EQUIVALENT	MANUF.

(01) 22.09.89 No substitution of +Vcc by +5V.

(02) 15.02.90 Correction of mistake C76 and C77.

Note 1 - Record current switches 1.862.740-xx are not included in part-list 1.862.712-00

El=Electrolytic, PETP=Polyesterfilm

MANUFACTURER: AMD=Advanced Micro Devices, Fc=Fairchild, ITT=Intermetall, Mot=Motorola, NS=National Semiconductors, Ph=Philips, RCA=Radio Corporation of America, SES=SES/Ates, Sig=Signetics, St=Studer, Tho=Thomson, Tf=Telefunken, TI=Texas Instruments.

ORIG 89/05/05 (01) 89/09/22 (02) 90/02/15

BLOCK DIAGRAM RECORD CURRENT DRIVER 8CH

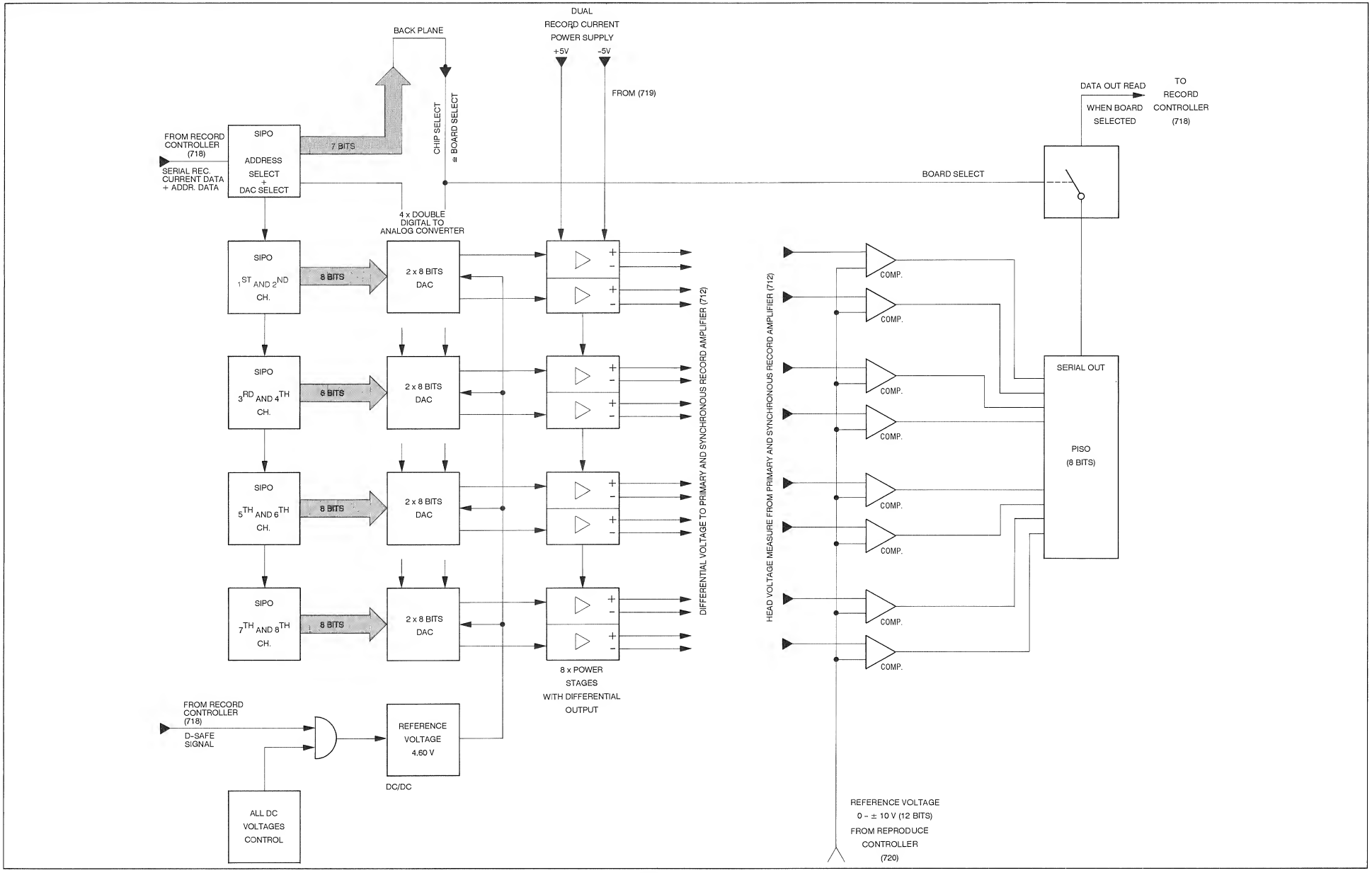

RECORD CURRENT DRIVER 8CH 1.862.716.00

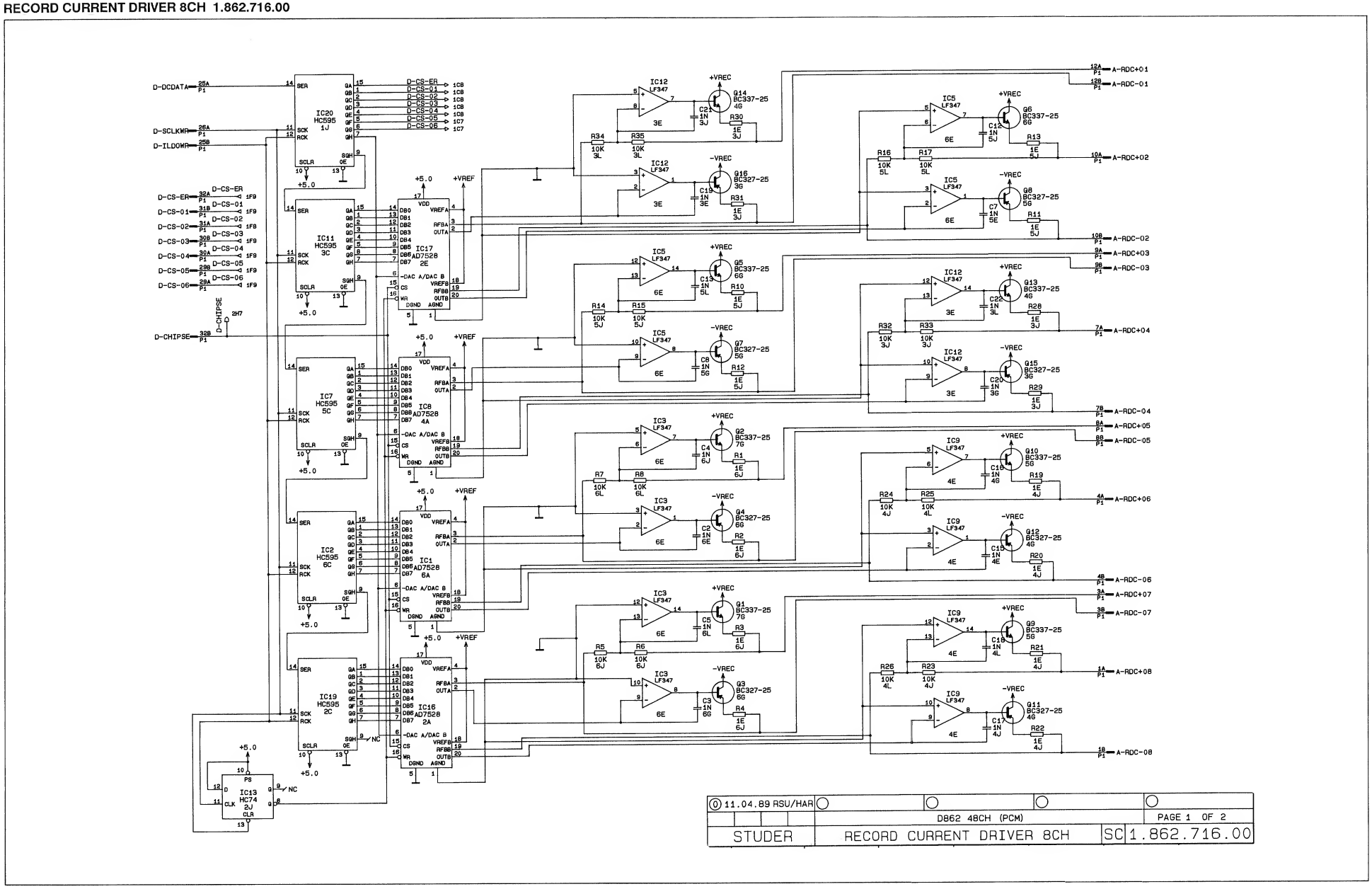

RECORD CURRENT DRIVER 8CH 1.862.716.00

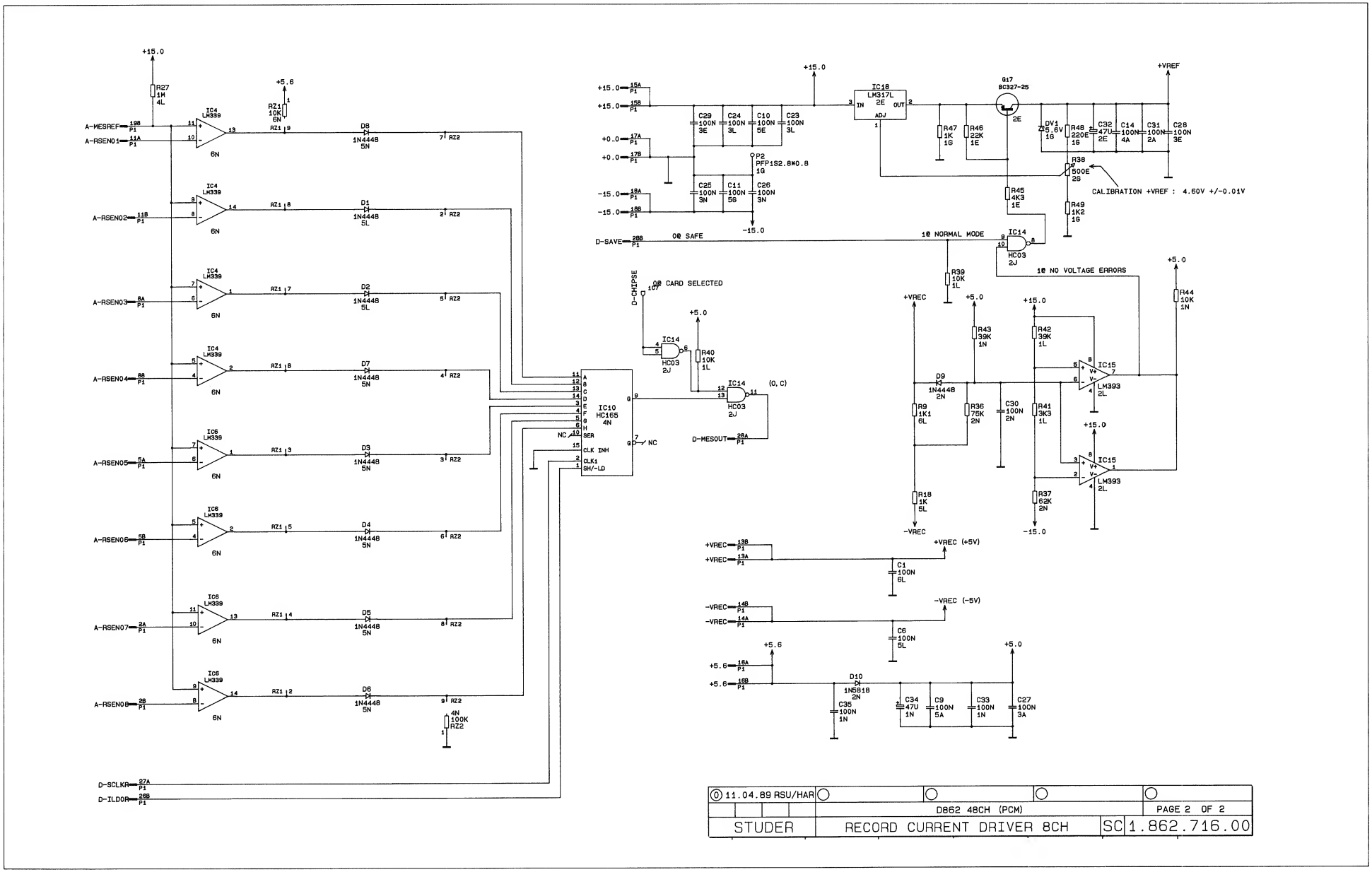

RECORD CURRENT DRIVER 8CH 1.862.716.00

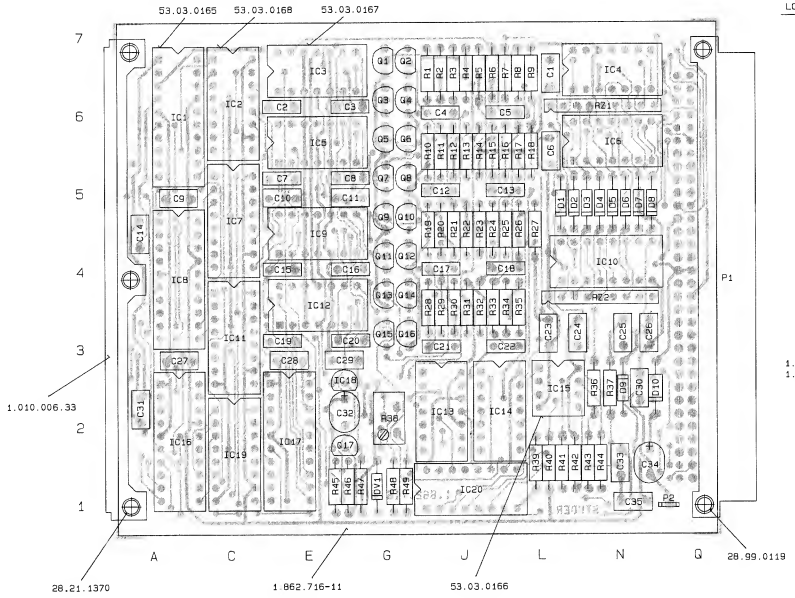

SCHILD 43.01.0108 AUFGEKLEBT NACH FABRIKATIONSMUSTER.

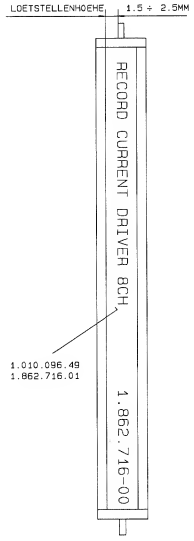

IND.	POS.NO.	PART NO.	VALUE	SPECIFICATIONS / EQUIVALENT	MANUF.
	Q....2	50.43.0340	BC 337-25		ITT,NS,Ph,Sie
	Q....3	50.43.0351	BC 327-25		ITT,Ph,Sie
	Q....4	50.43.0351	BC 327-25		ITT,Ph,Sie
	Q....5	50.43.0340	BC 337-25		ITT,NS,Ph,Sie
	Q....6	50.43.0340	BC 337-25		ITT,NS,Ph,Sie
	Q....7	50.43.0351	BC 327-25		ITT,Ph,Sie
	Q....8	50.43.0351	BC 327-25		ITT,Ph,Sie
	Q....9	50.43.0340	BC 337-25		ITT,NS,Ph,Sie
	Q....10	50.43.0340	BC 337-25		ITT,NS,Ph,Sie
	Q....11	50.43.0351	BC 327-25		ITT,Ph,Sie
	Q....12	50.43.0351	BC 327-25		ITT,Ph,Sie
	Q....13	50.43.0340	BC 337-25		ITT,NS,Ph,Sie
	Q....14	50.43.0340	BC 337-25		ITT,NS,Ph,Sie
	Q....15	50.43.0351	BC 327-25		ITT,Ph,Sie
	Q....16	50.43.0351	BC 327-25		ITT,Ph,Sie
	Q....17	50.43.0351	BC 327-25		ITT,Ph,Sie
	R....1	57.11.3109	1 Ohm	5%	
	R....2	57.11.3109	1 Ohm	5%	
	R....3	57.11.3109	1 Ohm	5%	
	R....4	57.11.3109	1 Ohm	5%	
	R....5	57.11.3103	10 kOhm	2%	
	R....6	57.11.3103	10 kOhm	2%	
	R....7	57.11.3103	10 kOhm	2%	
	R....8	57.11.3103	10 kOhm	2%	
	R....9	57.11.3112	1,1 kOhm	2%	
	R....10	57.11.3109	1 Ohm	5%	
	R....11	57.11.3109	1 Ohm	5%	
	R....12	57.11.3109	1 Ohm	5%	
	R....13	57.11.3109	1 Ohm	5%	
	R....14	57.11.3103	10 kOhm	2%	
	R....15	57.11.3103	10 kOhm	2%	
	R....16	57.11.3103	10 kOhm	2%	
	R....17	57.11.3103	10 kOhm	2%	
	R....18	57.11.3102	1 kOhm	2%	
	R....19	57.11.3109	1 Ohm	5%	
	R....20	57.11.3109	1 Ohm	5%	

IND.	POS.NO.	PART NO.	VALUE	SPECIFICATIONS / EQUIVALENT	MANUF.
	R....21	57.11.3109	1 Ohm	5%	
	R....22	57.11.3109	1 Ohm	5%	
	R....23	57.11.3103	10 kOhm	2%	
	R....24	57.11.3103	10 kOhm	2%	
	R....25	57.11.3103	10 kOhm	2%	
	R....26	57.11.3103	10 kOhm	2%	
	R....27	57.11.3105	1 MOhm	5%	
	R....28	57.11.3109	1 Ohm	5%	
	R....29	57.11.3109	1 Ohm	5%	
	R....30	57.11.3109	1 Ohm	5%	
	R....31	57.11.3109	1 Ohm	5%	
	R....32	57.11.3103	10 kOhm	2%	
	R....33	57.11.3103	10 kOhm	2%	
	R....34	57.11.3103	10 kOhm	2%	
	R....35	57.11.3103	10 kOhm	2%	
	R....36	57.11.3753	75 kOhm	2%	
	R....37	57.11.3623	62 kOhm	2%	
	R....38	58.05.1501	500 Ohm	Potentiometer 22-turn, 10%, linear	
	R....39	57.11.3103	10 kOhm	2%	
	R....40	57.11.3103	10 kOhm	2%	
	R....41	57.11.3332	3.3 kOhm	2%	
	R....42	57.11.3393	39 kOhm	2%	
	R....43	57.11.3393	39 kOhm	2%	
	R....44	57.11.3103	10 kOhm	2%	
	R....45	57.11.3432	4.3 kOhm	2%	
	R....46	57.11.3223	22 kOhm	2%	
	R....47	57.11.3102	1 kOhm	2%	
	R....48	57.11.3221	220 Ohm	2%	
	R....49	57.11.3122	1.2 kOhm	2%	
	RZ....1	57.88.4103	8 x 10	k	see note 2
	RZ....2	57.88.4104	8 x 100	k	see note 1

IND.	POS.NO.	PART NO.	VALUE	SPECIFICATIONS / EQUIVALENT	MANUF.
	C....1	59.06.0104	100 nF	10%, 63V , PETP	
	C....2	59.06.0102	1 nF	10%, 63V , PETP	
	C....3	59.06.0102	1 nF	10%, 63V , PETP	
	C....4	59.06.0102	1 nF	10%, 63V , PETP	
	C....5	59.06.0102	1 nF	10%, 63V , PETP	
	C....6	59.06.0104	100 nF	10%, 63V , PETP	
	C....7	59.06.0102	1 nF	10%, 63V , PETP	
	C....8	59.06.0102	1 nF	10%, 63V , PETP	
	C....9	59.06.0104	100 nF	10%, 63V , PETP	
	C....10	59.06.0104	100 nF	10%, 63V , PETP	
	C....11	59.06.0104	100 nF	10%, 63V , PETP	
	C....12	59.06.0102	1 nF	10%, 63V , PETP	
	C....13	59.06.0102	1 nF	10%, 63V , PETP	
	C....14	59.06.0104	100 nF	10%, 63V , PETP	
	C....15	59.06.0102	1 nF	10%, 63V , PETP	
	C....16	59.06.0102	1 nF	10%, 63V , PETP	
	C....17	59.06.0102	1 nF	10%, 63V , PETP	
	C....18	59.06.0102	1 nF	10%, 63V , PETP	
	C....19	59.06.0102	1 nF	10%, 63V , PETP	
	C....20	59.06.0102	1 nF	10%, 63V , PETP	
	C....21	59.06.0102	1 nF	10%, 63V , PETP	
	C....22	59.06.0102	1 nF	10%, 63V , PETP	
	C....23	59.06.0104	100 nF	10%, 63V , PETP	
	C....24		Not used		
	C....25	59.06.0104	100 nF	10%, 63V , PETP	
	C....26		Not used		
	C....27	59.06.0104	100 nF	10%, 63V , PETP	
	C....28	59.06.0104	100 nF	10%, 63V , PETP	
	C....29	59.06.0104	100 nF	10%, 63V , PETP	
	C....30	59.06.0104	100 nF	10%, 63V , PETP	
	C....31	59.06.0104	100 nF	10%, 63V , PETP	
	C....32	59.26.0470	47 uF	20%, 6.3V , SAL	
	C....33	59.06.0104	100 nF	10%, 63V , PETP	
	C....34	59.26.0470	47 uF	20%, 6.3V , SAL	
	C....35	59.06.0104	100 nF	10%, 63V , PETP	
	D....1	50.04.0125	1N 4448		Fc,ITT,Ph,Sea,Tf

IND.	POS.NO.	PART NO.	VALUE	SPECIFICATIONS / EQUIVALENT	MANUF.
	D....2	50.04.0125	1N 4448		Fc,ITT,Ph,Sea,Tf
	D....3	50.04.0125	1N 4448		Fc,ITT,Ph,Sea,Tf
	D....4	50.04.0125	1N 4448		Fc,ITT,Ph,Sea,Tf
	D....5	50.04.0125	1N 4448		Fc,ITT,Ph,Sea,Tf
	D....6	50.04.0125	1N 4448		Fc,ITT,Ph,Sea,Tf
	D....7	50.04.0125	1N 4448		Fc,ITT,Ph,Sea,Tf
	D....8	50.04.0125	1N 4448		Fc,ITT,Ph,Sea,Tf
	D....9	50.04.0125	1N 4448		Fc,ITT,Ph,Sea,Tf
	D....10	50.04.0512	1N 5818	1N 5819	Not
	DV....1	50.04.1504	Z 5,6V		ITT,Mot,Ph,Tf,Th
	IC....1	50.07.0026	AD 7528	NF 7528	ADI,MPS
	IC....2	50.17.1595	74 HC 595		NS,SGS,TI
	IC....3	50.09.0104	LF 347 N		NS,Th
	IC....4	50.11.0104	LM 339		Fc,Mot,NS,Th
	IC....5	50.09.0104	LF 347 N		NS,Th
	IC....6	50.11.0104	LM 339		Fc,Mot,NS,Th
	IC....7	50.17.1595	74 HC 595		NS,SGS,TI
	IC....8	50.07.0026	AD 7528	NF 7528	ADI,MPS
	IC....9	50.09.0104	LF 347 N		NS,Th
	IC....10	50.17.1165	74 HC 165		NS,Ph,RCA,TI
	IC....11	50.17.1595	74 HC 595		NS,SGS,TI
	IC....12	50.09.0104	LF 347 N		NS,Th
	IC....13	50.17.1074	74 HC 74		Mot,NS,Ph,RCA,SGS,TI,To
	IC....14	50.17.1003	74 HC 03		Mot,NS,TI
	IC....15	50.05.0283	LM 393 P	LM 393 N, LM 393 DP	TI,NS,Th
	IC....16	50.07.0026	AD 7528	NF 7528	ADI,MPS
	IC....17	50.07.0026	AD 7528	NF 7528	ADI,MPS
	IC....18	50.10.0108	LM 317 LZ		Not,NS
	IC....19	50.17.1595	74 HC 595		NS,SGS,TI
	IC....20	50.17.1595	74 HC 595		NS,SGS,TI
	P....1	54.11.2004	Connector	2*32 Euro Print	
	P....2		GND PIN	NOT USED	
	Q....1	50.43.0340	BC 337-25		ITT,NS,Ph,Sie

IND.	POS.NO.	PART NO.	VALUE	SPECIFICATIONS / EQUIVALENT	MANUF.

Note 1 - Network 8 * 100 kOhm, 5%, single line:
Allen Bradley nr. 709 A 104 or 909 A 104
Beckmann nr. L - 09 - 1 - R 100 K
Bourns nr. 4609 M - 101 - 104
or 4609 X - 101 - 104
Dale nr. CSC 09 A 01 - 104 G
Sprague nr. 256 C J 104 X2 PD
Tama nr. RG6 C 09 X 100 kOhm G
Vitron nr. F9E 100 kOhm 2%
or RB8 100 kOhm 2%

Note 2 - Network 8 * 10 kOhm, 5%, single line:
Allen Bradley nr. 909 A 103
Beckmann nr. L - 09 - 1 - R 10 k
Bourns nr. 4609 M - 101 - 103
Dale nr. CSC 09 A 01 - 103 G
Sprague nr. 256 C J 103 X2 PD
Tama nr. RG6 C 09 X 10 kOhm G
Vitron nr. F9E 10 kOhm 2%

Sel=Solid aluminium
PETP=Polyester film

MANUFACTURER: ADI=Analogue Devices Inc.,Fc=Fairchild,ITT=Intermetall,
MPS=Micro Power Systems,Mot=Motorola,NS=National Semic.
Ph=Philips,RCA=RCA Corporation of America,Sea=Seeness,
SGS=SGS/Ates, Sie=Siemens,Tf=Telefunken,Th=Thomson CSF,
TI=Texas Instruments, To=Toshiba.

ORIG 89/04/11

BLOCK DIAGRAM ERASE CURRENT DRIVER

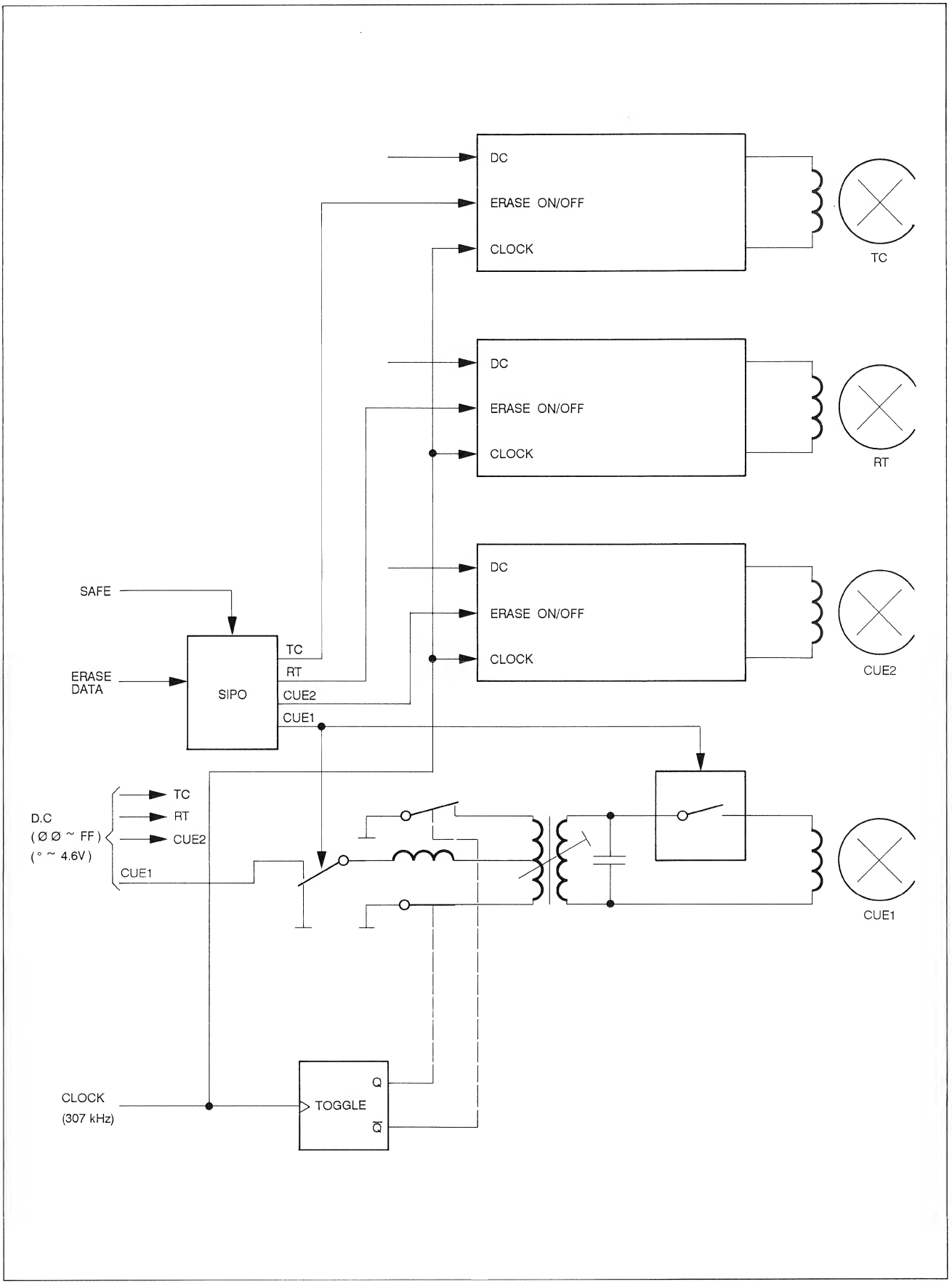

ERASE CURRENT DRIVER 1.862.717.00

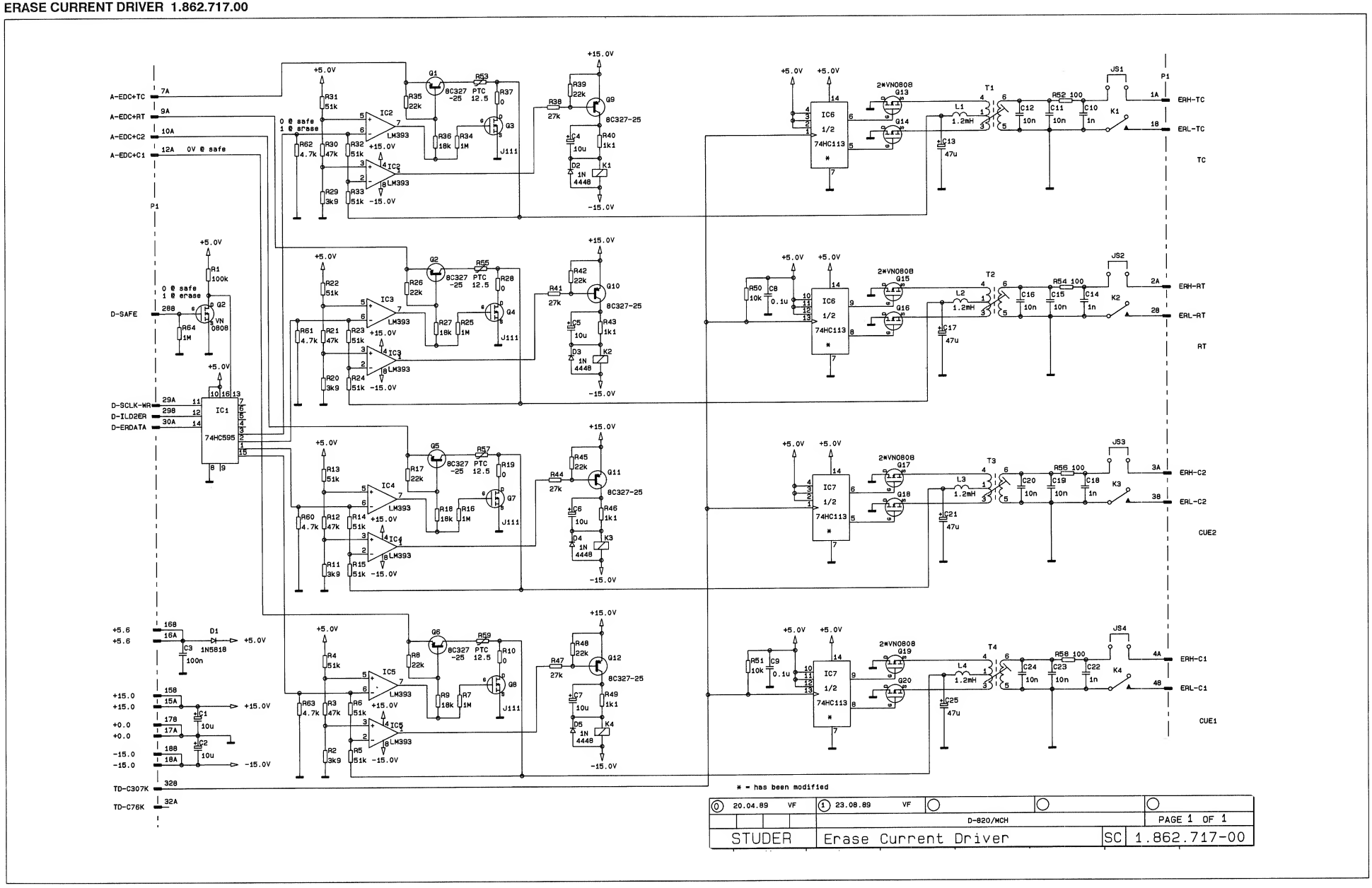

ERASE CURRENT DRIVER 1.862.717.00

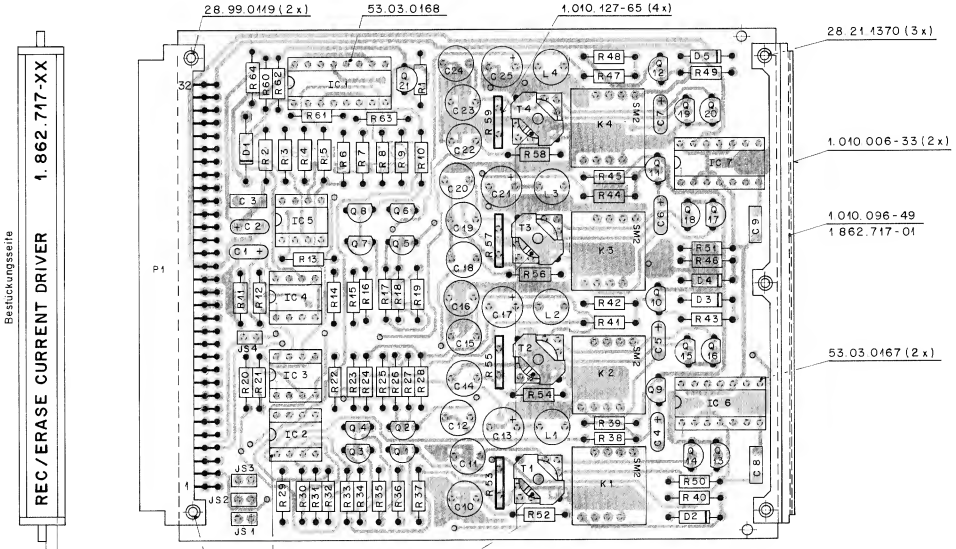

① Unterlage 1.010.007-61 unter T1 bis T4 (4x) montiert.

Schild 43.010.08 aufgeklebt nach Fabrikationsmuster.

IND.	POS.NO.	PART NO.	VALUE	SPECIFICATIONS / EQUIVALENT	MANUF.
	C....1	59.26.5100	10 uF	20%, 25V / Sal	
	C....2	59.26.5100	10 uF	20%, 25V / Sal	
	C....3	59.06.0104	100 nF	10%, 63V / PETP	
	C....4	59.26.5100	10 uF	20%, 25V / Sal	
	C....5	59.26.5100	10 uF	20%, 25V / Sal	
	C....6	59.26.5100	10 uF	20%, 25V / Sal	
	C....7	59.26.5100	10 uF	20%, 25V / Sal	
	C....8	59.06.0104	100 nF	10%, 63V / PETP	
	C....9	59.06.0104	100 nF	10%, 63V / PETP	
	C....10	59.05.2102	1 nF	2.5%, 63V / PP	
	C....11	59.05.2103	10 nF	2.5%, 63V / PP	
	C....12	59.05.2103	10 nF	2.5%, 63V / PP	
	C....13	59.22.4470	47 uF	-20%, 16V / El	
	C....14	59.05.2102	1 nF	2.5%, 63V / PP	
	C....15	59.05.2103	10 nF	2.5%, 63V / PP	
	C....16	59.05.2103	10 nF	2.5%, 63V / PP	
	C....17	59.22.4470	47 uF	-20%, 16V / El	
	C....18	59.05.2102	1 nF	2.5%, 63V / PP	
	C....19	59.05.2103	10 nF	2.5%, 63V / PP	
	C....20	59.05.2103	10 nF	2.5%, 63V / PP	
	C....21	59.22.4470	47 uF	-20%, 16V / El	
	C....22	59.05.2102	1 nF	2.5%, 63V / PP	
	C....23	59.05.2103	10 nF	2.5%, 63V / PP	
	C....24	59.05.2103	10 nF	2.5%, 63V / PP	
	C....25	59.22.4470	47 uF	-20%, 16V / El	
	D....1	50.04.0512	1N 5818	1N 5819	Mot
	D....2	50.04.0125	1N 4448		Fa/ITT/Ph/SES/TI
	D....3	50.04.0125	1N 4448		Fa/ITT/Ph/SES/TI
	D....4	50.04.0125	1N 4448		Fa/ITT/Ph/SES/TI
	D....5	50.04.0125	1N 4448		Fa/ITT/Ph/SES/TI
	IC....1	50.17.1295	N74 HC 595	.. 74 HC 595	NS/SES/Tho/TI
	IC....2	50.05.0283	LM 393 P	LM 393 N, LM 393 DP	TI/NS/Tho
	IC....3	50.05.0283	LM 393 P	LM 393 N, LM 393 DP	TI/NS/Tho
	IC....4	50.05.0283	LM 393 P	LM 393 N, LM 393 DP	TI/NS/Tho
	IC....5	50.05.0283	LM 393 P	LM 393 N, LM 393 DP	TI/NS/Tho

S T U D E R (01) 89/08/23 BD ERASE CURRENT DRIVER PL 1.862.717.00 PAGE 1

IND.	POS.NO.	PART NO.	VALUE	SPECIFICATIONS / EQUIVALENT	MANUF.
(00)	IC....6	50.06.0113	N74LS 113N	SN 74 LS 113 N	Sig/TI
(01)	IC....6	50.17.1113	MC74HC113N	SN 74 HC 113 N	Mot/TI
(00)	IC....7	50.06.0113	N74LS 113N	SN 74 LS 113 N	Sig/TI
(01)	IC....7	50.17.1113	MC74HC113N	SN 74 HC 113 N	Mot/TI
	K....1	56.04.0171	SM D1012		ITT
	K....2	56.04.0171	SM D1012		ITT
	K....3	56.04.0171	SM D1012		ITT
	K....4	56.04.0171	SM D1012		ITT
	L....1	62.02.2122	1.2 mH	TDK Nr. CSL 0812 - 122 J	
	L....2	62.02.2122	1.2 mH	TDK Nr. CSL 0812 - 122 J	
	L....3	62.02.2122	1.2 mH	TDK Nr. CSL 0812 - 122 J	
	L....4	62.02.2122	1.2 mH	TDK Nr. CSL 0812 - 122 J	
	P....1	54.01.0358	Connector	2*32 Euro Print	
	Q....1	50.03.0351	BC 327-25		ITT/Ph/Sie
	Q....2	50.03.0351	BC 327-25		ITT/Ph/Sie
	Q....3	50.03.0216	J 111		Mot/NS/Six/Le
	Q....4	50.03.0216	J 111		Mot/NS/Six/Le
	Q....5	50.03.0351	BC 327-25		ITT/Ph/Sie
	Q....6	50.03.0351	BC 327-25		ITT/Ph/Sie
	Q....7	50.03.0216	J 111		Mot/NS/Six/Le
	Q....8	50.03.0216	J 111		Mot/NS/Six/Le
	Q....9	50.03.0351	BC 327-25		ITT/Ph/Sie
	Q....10	50.03.0351	BC 327-25		ITT/Ph/Sie
	Q....11	50.03.0351	BC 327-25		ITT/Ph/Sie
	Q....12	50.03.0351	BC 327-25		ITT/Ph/Sie
	Q....13	50.03.1505	NV 0808 M	VN 0808 MTP, ZVN 0108 A	Fa/Six
	Q....14	50.03.1505	NV 0808 M	VN 0808 MTP, ZVN 0108 A	Fa/Six
	Q....15	50.03.1505	NV 0808 M	VN 0808 MTP, ZVN 0108 A	Fa/Six
	Q....16	50.03.1505	NV 0808 M	VN 0808 MTP, ZVN 0108 A	Fa/Six
	Q....17	50.03.1505	NV 0808 M	VN 0808 MTP, ZVN 0108 A	Fa/Six
	Q....18	50.03.1505	NV 0808 M	VN 0808 MTP, ZVN 0108 A	Fa/Six
	Q....19	50.03.1505	NV 0808 M	VN 0808 MTP, ZVN 0108 A	Fa/Six
	Q....20	50.03.1505	NV 0808 M	VN 0808 MTP, ZVN 0108 A	Fa/Six

S T U D E R (01) 89/08/23 BD ERASE CURRENT DRIVER PL 1.862.717.00 PAGE 2

IND.	POS.NO.	PART NO.	VALUE	SPECIFICATIONS / EQUIVALENT	MANUF.
	Q....21	50.03.1505	NV 0808 M	VN 0808 MTP, ZVN 0108 A	Fa/Six
	R....1	57.11.3104	100 kOhm	1%	
	R....2	57.11.3392	3.9 kOhm	1%	
	R....3	57.11.3473	47 kOhm	1%	
	R....4	57.11.3513	51 kOhm	1%	
	R....5	57.11.3513	51 kOhm	1%	
	R....6	57.11.3513	51 kOhm	1%	
	R....7	57.11.3105	1 MOhm	1%	
	R....8	57.11.3223	22 kOhm	1%	
	R....9	57.11.3183	18 kOhm	1%	
	R....10	57.11.3000	0 Ohm		
	R....11	57.11.3392	3.9 kOhm	1%	
	R....12	57.11.3473	47 kOhm	1%	
	R....13	57.11.3513	51 kOhm	1%	
	R....14	57.11.3513	51 kOhm	1%	
	R....15	57.11.3513	51 kOhm	1%	
	R....16	57.11.3105	1 MOhm	1%	
	R....17	57.11.3223	22 kOhm	1%	
	R....18	57.11.3183	18 kOhm	1%	
	R....19	57.11.3000	0 Ohm		
	R....20	57.11.3392	3.9 kOhm	1%	
	R....21	57.11.3473	47 kOhm	1%	
	R....22	57.11.3513	51 kOhm	1%	
	R....23	57.11.3513	51 kOhm	1%	
	R....24	57.11.3513	51 kOhm	1%	
	R....25	57.11.3105	1 MOhm	1%	
	R....26	57.11.3223	22 kOhm	1%	
	R....27	57.11.3183	18 kOhm	1%	
	R....28	57.11.3000	0 Ohm		
	R....29	57.11.3392	3.9 kOhm	1%	
	R....30	57.11.3473	47 kOhm	1%	
	R....31	57.11.3513	51 kOhm	1%	
	R....32	57.11.3513	51 kOhm	1%	
	R....33	57.11.3513	51 kOhm	1%	
	R....34	57.11.3105	1 MOhm	1%	
	R....35	57.11.3223	22 kOhm	1%	

S T U D E R (01) 89/08/23 BD ERASE CURRENT DRIVER PL 1.862.717.00 PAGE 3

IND.	POS.NO.	PART NO.	VALUE	SPECIFICATIONS / EQUIVALENT	MANUF.
	R....36	57.11.3183	18 kOhm	1%	
	R....37	57.11.3000	0 Ohm		
	R....38	57.11.3273	27 kOhm	1%	
	R....39	57.11.3223	22 kOhm	1%	
	R....40	57.11.3112	1.1 kOhm	1%	
	R....41	57.11.3273	27 kOhm	1%	
	R....42	57.11.3223	22 kOhm	1%	
	R....43	57.11.3112	1.1 kOhm	1%	
	R....44	57.11.3273	27 kOhm	1%	
	R....45	57.11.3223	22 kOhm	1%	
	R....46	57.11.3112	1.1 kOhm	1%	
	R....47	57.11.3273	27 kOhm	1%	
	R....48	57.11.3223	22 kOhm	1%	
	R....49	57.11.3112	1.1 kOhm	1%	
	R....50	57.11.3103	10 kOhm	1%	
	R....51	57.11.3103	10 kOhm	1%	
	R....52	57.11.3101	100 Ohm	1%	
	R....53	57.92.1181	12.5 Ohm	PTC-Resistor, Philips nr. 2322 662 91028	
	R....54	57.11.3101	100 Ohm	1%	
	R....55	57.92.1181	12.5 Ohm	PTC-Resistor, Philips nr. 2322 662 91028	
	R....56	57.11.3101	100 Ohm	1%	
	R....57	57.92.1181	12.5 Ohm	PTC-Resistor, Philips nr. 2322 662 91028	
	R....58	57.11.3101	100 Ohm	1%	
	R....59	57.92.1181	12.5 Ohm	PTC-Resistor, Philips nr. 2322 662 91028	
	R....60	57.11.3472	4.7 kOhm	1%	
	R....61	57.11.3472	4.7 kOhm	1%	
	R....62	57.11.3472	4.7 kOhm	1%	
	R....63	57.11.3472	4.7 kOhm	1%	
	R....64	57.11.3105	1 MOhm	1%	
	T....1	1.022.619.00		ERASE TRANSFORMER	
	T....2	1.022.619.00		ERASE TRANSFORMER	
	T....3	1.022.619.00		ERASE TRANSFORMER	
	T....4	1.022.619.00		ERASE TRANSFORMER	
	JS....1	54.01.0020	Cont. Pin		
	JS....2	54.01.0020	Cont. Pin		

S T U D E R (01) 89/08/23 BD ERASE CURRENT DRIVER PL 1.862.717.00 PAGE 4

IND.	POS.NO.	PART NO.	VALUE	SPECIFICATIONS / EQUIVALENT	MANUF.
	JS....3	54.01.0020	Cont. Pin		
	JS....4	54.01.0020	Cont. Pin		

El=Electrolytic, PETP=Polyesterfilm, Sal=Solid Aluminum, PP=Polyporylen.

MANUFACTURER: AMD=Advanced Micro Devices, Fa=Fairchild, ITT=Intermetall,
Mot=Motorola, NS=National Semiconductors, Ph=Philips,
RCA=Radio Corporation of America, SES=SES/Ates,
Sig=Signetics, St=Studer, Tho=Thomson, TI=Telefunken,
TI=Texas Instruments.

ORIG 89/04/20 (01) 89/08/23

S T U D E R (01) 89/08/23 BD ERASE CURRENT DRIVER PL 1.862.717.00 PAGE 5

BLOCK DIAGRAM RECORD CONTROLLER

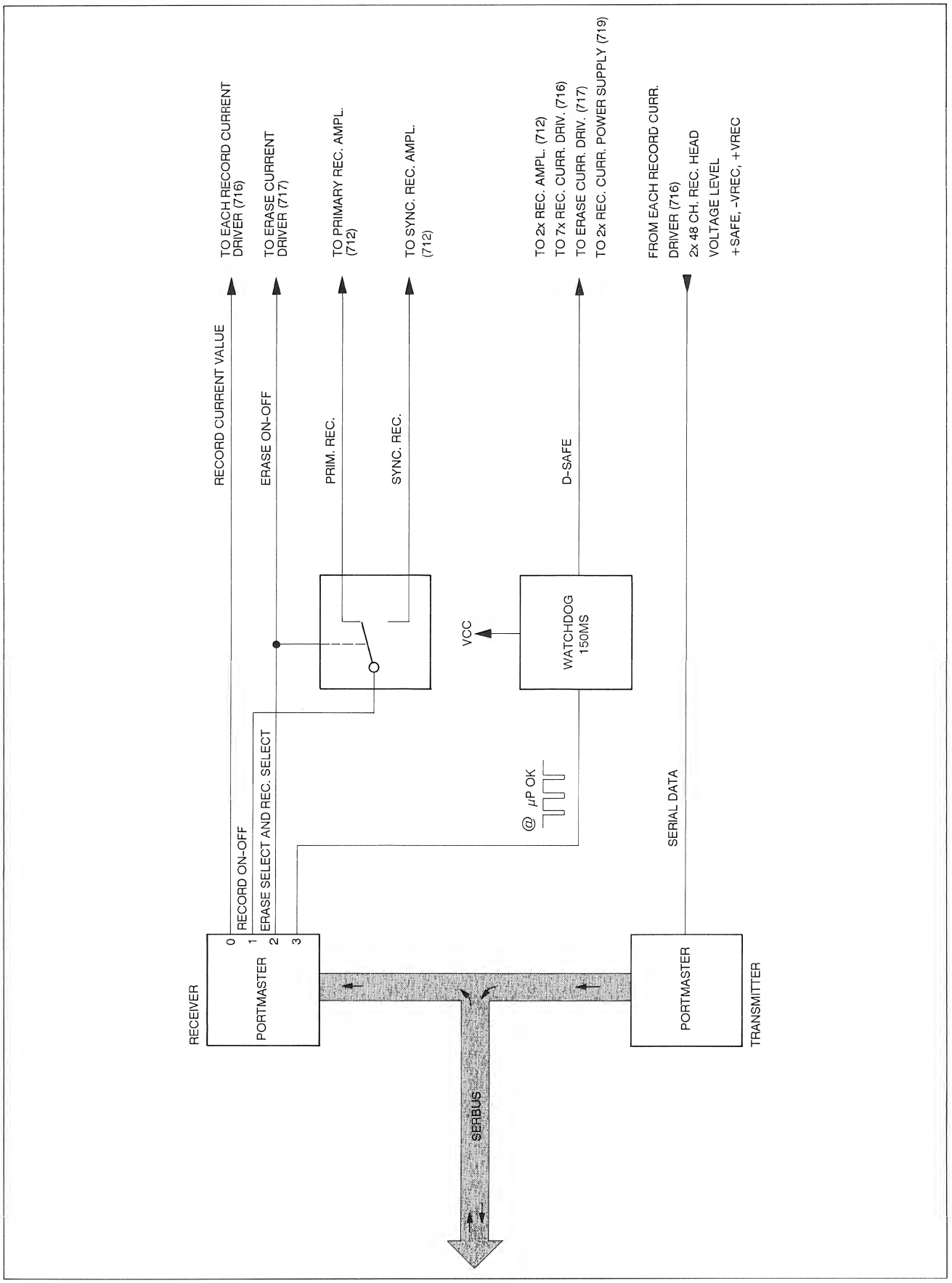

RECORD CONTROLLER 1.862.718.00

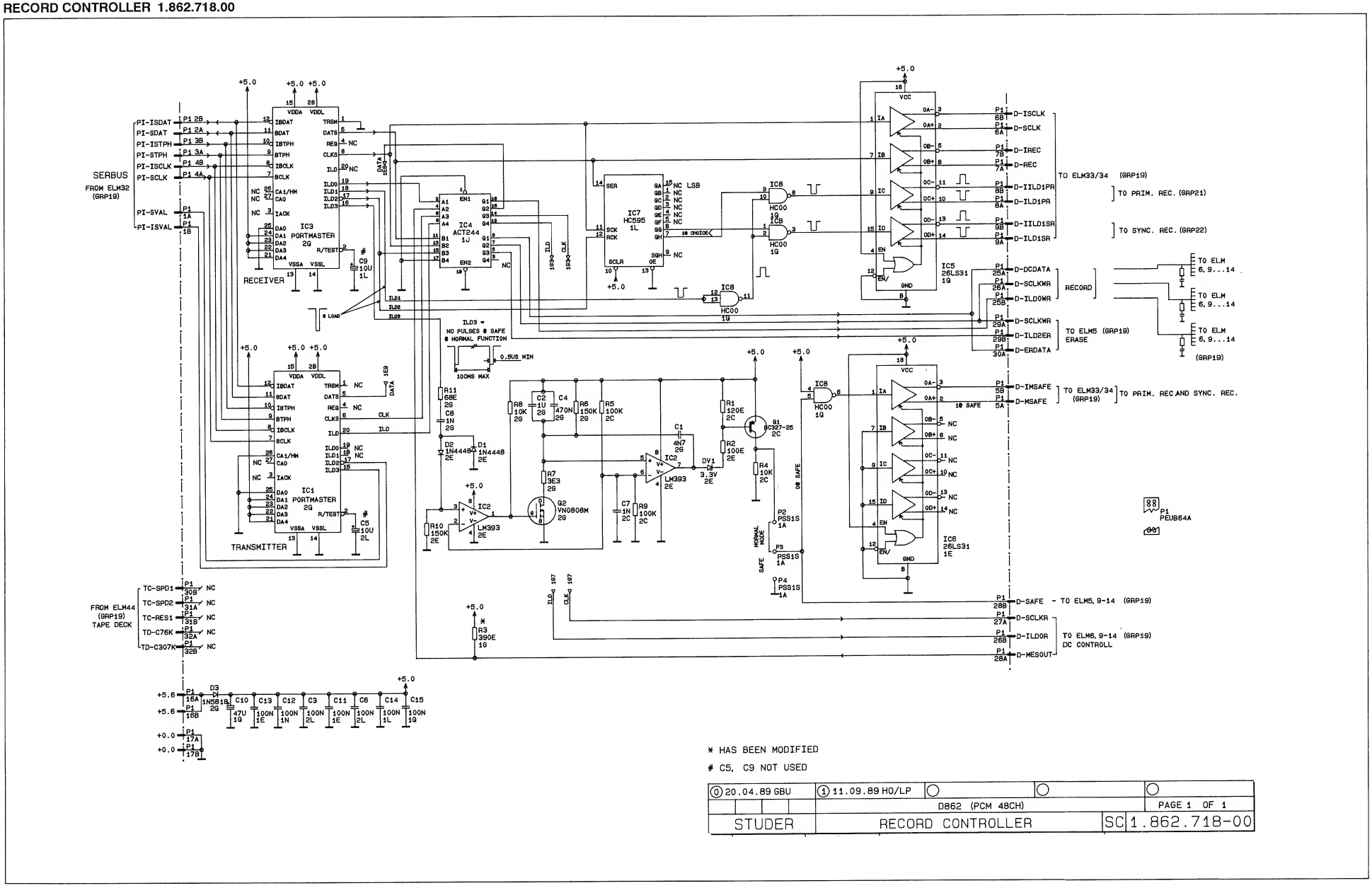

* HAS BEEN MODIFIED

\# C5, C9 NOT USED

⓪ 20.04.89 GBU	① 11.09.89 HO/LP	○	○	○
	D862 (PCM 48CH)			PAGE 1 OF 1
STUDER	RECORD CONTROLLER		SC	1.862.718-00

RECORD CONTROLLER 1.862.718.00

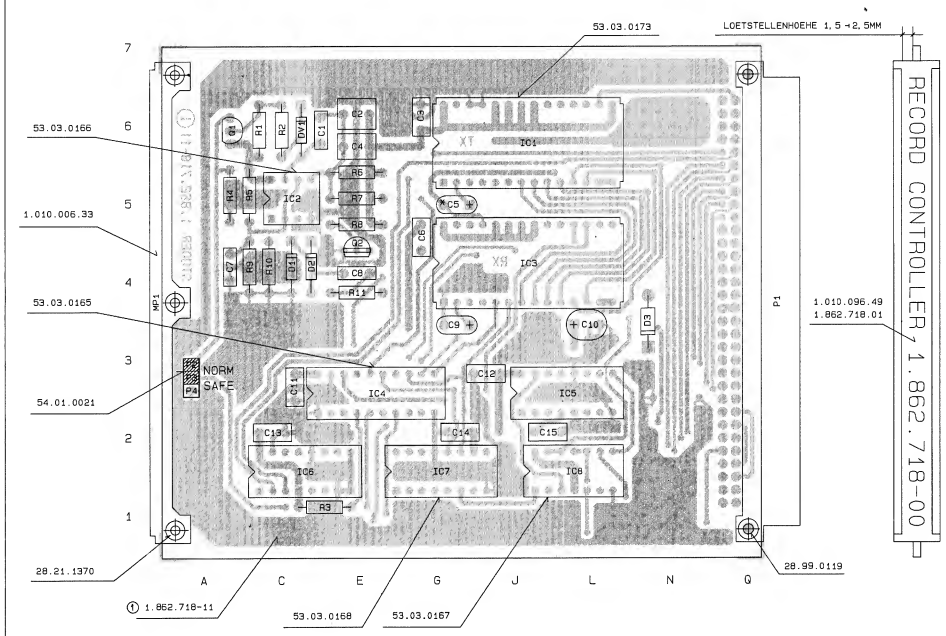

SCHILD 43.01.0108 AUFGEKLEBT
NACH FABRIKATIONSMUSTER

IND.	POS.NO.	PART NO.	VALUE	SPECIFICATIONS / EQUIVALENT	MANUF.
	C.....1	59.06.0472	4.7 nF	10% , 63V , PETP	
	C.....2	59.06.0105	1 uF	10% , 63V , PETP	
	C.....3	59.06.0104	100 nF	10% , 63V , PETP	
	C.....4	59.06.0474	470 nF	10% , 63V , PETP	
	C.....5		not used		
	C.....6	59.06.0104	100 nF	10% , 63V , PETP	
	C.....7	59.06.0102	1 nF	10% , 63V , PETP	
	C.....8	59.06.0102	1 nF	10% , 63V , PETP	
	C.....9		not used		
	C....10	59.26.0470	47 uF	20% ,6,3V , Sal	
	C....11	59.06.0104	100 nF	10% , 63V , PETP	
	C....12	59.06.0104	100 nF	10% , 63V , PETP	
	C....13	59.06.0104	100 nF	10% , 63V , PETP	
	C....14	59.06.0104	100 nF	10% , 63V , PETP	
	C....15	59.06.0104	100 nF	10% , 63V , PETP	
	D.....1	50.04.0125	1N 4448		R-OHM,Fc,ITT,Ph,SES,Tf
	D.....2	50.04.0125	1N 4448		R-OHM,Fc,ITT,Ph,SES,Tf
	D.....3	50.04.0512	1N 5818	1N 5819	Mot
	DV....1	50.04.1107	3.3V Z		ITT,Mot,Ph,Tf,Th
	IC....1	50.50.0010	PORTMASTER		Dectro5wiss
	IC....2	50.05.0283	LM 393		TI,NS,Th
	IC....3	50.50.0010	PORTMASTER		Dectro5wiss
	IC....4	50.17.7244	74ACT244		RCA,Ze
	IC....5	50.15.0108	AM26 LS 31		AMD,Mot,TI
	IC....6	50.15.0108	AM26 LS 31		AMD,Mot,TI
	IC....7	50.17.1595	74HC595		NS,SGS,TI
	IC....8	50.17.1000	74HC00		Mot,NS,Ph,RCA,SGS,TI,To
	F.....1	54.11.2004	Connector	2*32 Euro Print	
	F.....2	54.01.0020	Cont. Pin		
	F.....3	54.01.0020	Cont. Pin		
	F.....4	54.01.0020	Cont. Pin		
	Q.....1	50.03.0351	BC 327-25		ITT,Ph,Sie

S T U D E R (01) 89/09/11 LP RECORD CONTROLLER PL 1.862.718.00 PAGE 1

IND.	POS.NO.	PART NO.	VALUE	SPECIFICATIONS / EQUIVALENT	MANUF.
	Q.....2	50.03.1505	VN 0808	VN 0108	Fa,Six
	R.....1	57.11.3121	120 Ohm	2%	
	R.....2	57.11.3101	100 Ohm	5%	
(00)	R.....3	57.11.3103	10 kOhm	5%	
(01)	R.....3	57.11.3391	390 Ohm	5%	
	R.....4	57.11.3103	10 kOhm	5%	
	R.....5	57.11.3104	100 kOhm	5%	
	R.....6	57.11.3154	150 kOhm	5%	
	R.....7	57.11.3339	3.3 Ohm	5%	
	R.....8	57.11.3103	10 kOhm	5%	
	R.....9	57.11.3104	100 kOhm	5%	
	R....10	57.11.3154	150 kOhm	5%	
	R....11	57.11.3680	68 Ohm	5%	

(01) 89/09/11 Decrease of rise time D-MESOUT signal.

Sal=Solid Aluminium, PETP=Polyesterfilm.

MANUFACTURER: AMD=Advanced Micro Devices,Fc=Fairchild, Fa=Ferranti,
ITT=Intermetall,Mot=Motorola,
NS=National Semiconductors, Ph=Philips,
RCA=Radio Corporation of America,Sem=Semcosem,
SGS=SGS/Ates, Sie=Siemens,Six=Siliconix, Tf=Telefunken,
Th=Thomson, TI= Texas Instruments, To=Toshiba.

ORIG 89/04/20 (01) 89/09/11

S T U D E R (01) 89/09/11 LP RECORD CONTROLLER PL 1.862.718.00 PAGE 2

RECORD CURRENT SUPPLY 1.862.719.00

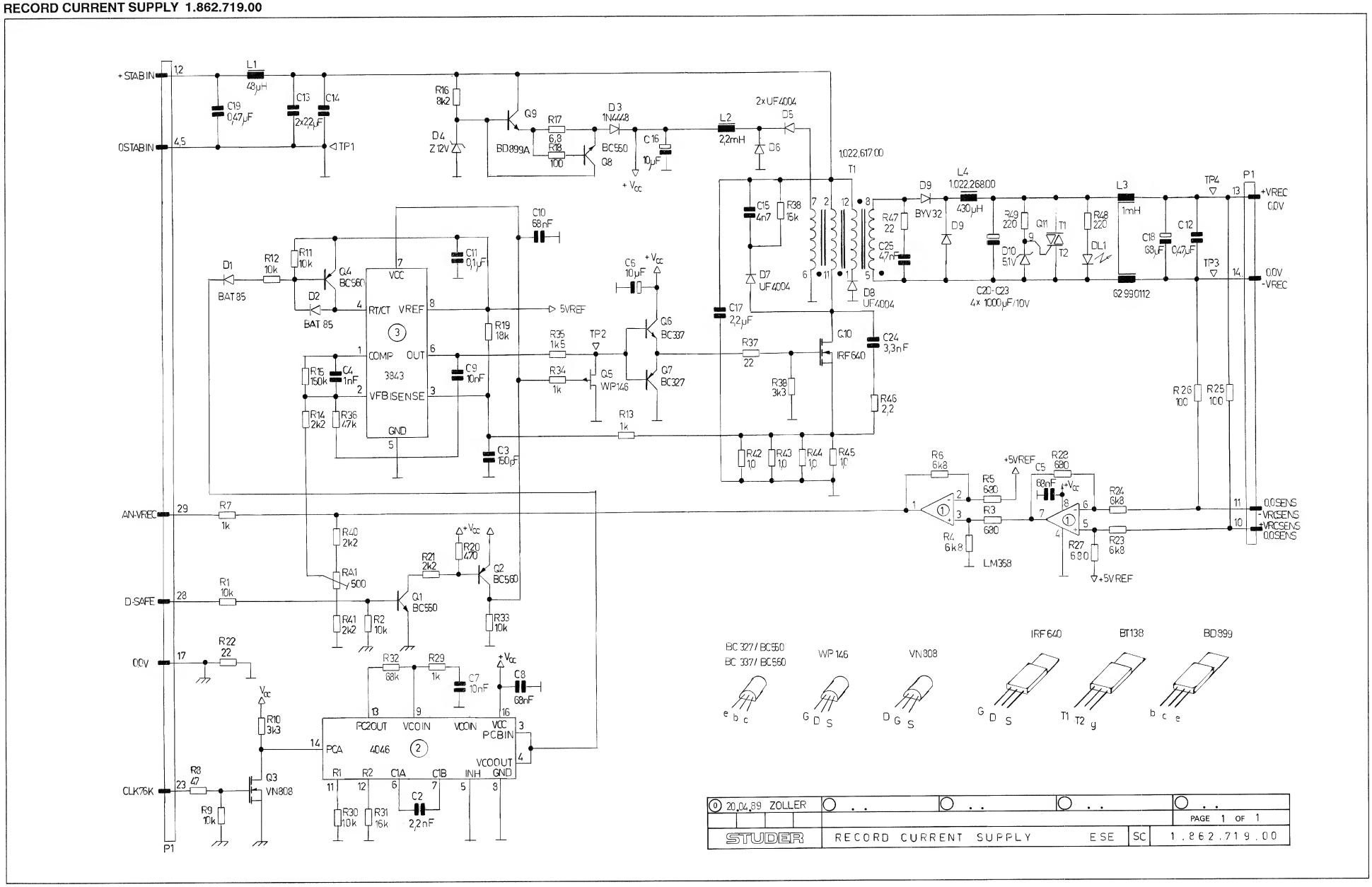

RECORD CURRENT SUPPLY 1.862.719.00

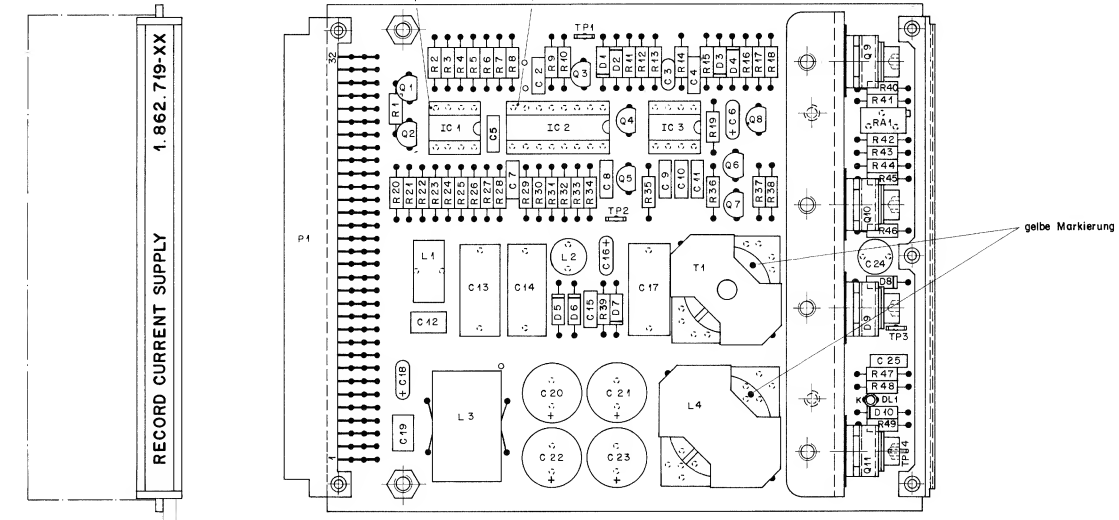

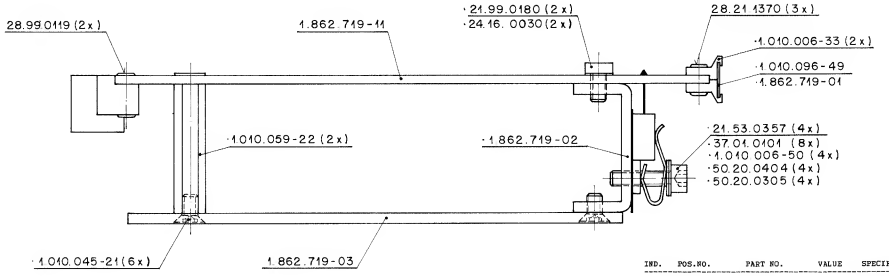

L1 und L3 mit Siliconkleber 99.01.0571 nach BV 640 gesichert.

IND.	POS.NO.	PART NO.	VALUE	SPECIFICATIONS / EQUIVALENT	MANUF.
	DL....1	50.04.2129	LS 3160		
	IC....1	50.05.0286	LM 358 N	LM 358 P	NS,Mot,SGS,Ti
	IC....2	50.07.0046	CD4046BE	HCF4046BE	SGS,RCA
	IC....3	50.10.0113	IP 3843N	UC 3843N	IPS,Un
	L.....1	62.03.0010	48 uH	Filter coil	Tokin
	L.....2	62.02.1222	2,2 mH	Filter coil	Toko
	L.....3	62.99.0112	31 mH	Filter coil	Tokin
	L.....4	1.022.268.00	430 uH	Filter coil	St
	P.....1	54.01.0358	96 cont.		
	Q.....1	50.03.0497	BC 550		Sie
	Q.....2	50.03.0496	BC 560		Sie
	Q.....3	50.03.1505	VN 0808 M	ZVN 0108 A	Fe,Six
	Q.....4	50.03.0496	BC 560		Sie
	Q.....5	50.03.0329	WF 146		Six
	Q.....6	50.03.0340	BC 337-25		ITT,NS,Ph,Sie
	Q.....7	50.03.0351	BC 327-25		ITT,Ph,Sie
	Q.....8	50.03.0497	BC 550		Sie
	Q.....9	50.03.0512	BD 899 A	BDW 93 B	Mot,SGS
	Q....10	50.03.1610	IRF 640		IR
	Q....11	50.99.0106	T 2800 D	T 2800 M, BT 138	Ph,RCA
	R.....1	57.11.3103	10 kOhm	5%	
	R.....2	57.11.3103	10 kOhm	5%	
	R.....3	57.11.3681	680 Ohm	1%	
	R.....4	57.11.3682	6.8 kOhm	1%	
	R.....5	57.11.3681	680 Ohm	1%	
	R.....6	57.11.3682	6.8 kOhm	1%	
	R.....7	57.11.3102	1 kOhm	5%	
	R.....8	57.11.3470	47 Ohm	5%	
	R.....9	57.11.3103	10 kOhm	5%	
	R....10	57.11.3332	3.3 kOhm	5%	
	R....11	57.11.3103	10 kOhm	5%	
	R....12	57.11.3103	10 kOhm	5%	

S T U D E R (00) 89/04/20 PZ RECORD CURRENT SUPPLY PL 1.862.719.00 PAGE 2

IND.	POS.NO.	PART NO.	VALUE	SPECIFICATIONS / EQUIVALENT	MANUF.
	R....13	57.11.3102	1 kOhm	5%	
	R....14	57.11.3222	2.2 kOhm	5%	
	R....15	57.11.3154	150 kOhm	5%	
	R....16	57.11.3822	8.2 kOhm	5%	
	R....17	57.11.3689	6.8 Ohm	5%	
	R....18	57.11.3101	100 Ohm	5%	
	R....19	57.11.3183	18 kOhm	5%	
	R....20	57.11.3471	470 Ohm	5%	
	R....21	57.11.3222	2.2 kOhm	5%	
	R....22	57.11.3220	22 Ohm	5%	
	R....23	57.11.3682	6.8 kOhm	1%	
	R....24	57.11.3682	6.8 kOhm	1%	
	R....25	57.11.3101	100 Ohm	5%	
	R....26	57.11.3101	100 Ohm	5%	
	R....27	57.11.3681	680 Ohm	1%	
	R....28	57.11.3681	680 Ohm	1%	
	R....29	57.11.3102	1 kOhm	5%	
	R....30	57.11.3103	10 kOhm	1%	
	R....31	57.11.3163	16 kOhm	1%	
	R....32	57.11.3683	68 kOhm	5%	
	R....33	57.11.3103	10 kOhm	5%	
	R....34	57.11.3102	1 kOhm	5%	
	R....35	57.11.3152	1.5 kOhm	5%	
	R....36	57.11.3473	47 kOhm	5%	
	R....37	57.11.3220	22 Ohm	5%	
	R....38	57.11.3332	3.3 kOhm	5%	
	R....39	57.11.3153	15 kOhm	5%	
	R....40	57.11.3222	2.2 kOhm	5%	
	R....41	57.11.3222	2.2 kOhm	5%	
	R....42	57.11.3109	1 Ohm	1%	
	R....43	57.11.3109	1 Ohm	1%	
	R....44	57.11.3109	1 Ohm	1%	
	R....45	57.11.3109	1 Ohm	1%	
	R....46	57.11.3229	2.2 Ohm	5%	
	R....47	57.11.3220	22 Ohm	5%	
	R....48	57.11.3221	220 Ohm	5%	
	R....49	57.11.3221	220 Ohm	5%	

S T U D E R (00) 89/04/20 PZ RECORD CURRENT SUPPLY PL 1.862.719.00 PAGE 3

IND.	POS.NO.	PART NO.	VALUE	SPECIFICATIONS / EQUIVALENT	MANUF.
	C.....1			not used	
	C.....2	59.06.0222	2.2 nF	10%, 63V, PETP	
	C.....3	59.34.4151	150 pF	5%, 63V, CER	
	C.....4	59.06.0102	1 nF	10%, 63V, PETP	
	C.....5	59.06.0683	68 nF	10%, 63V, PETP	
	C.....6	59.26.5100	10 uF	20%, 25V, SAL	
	C.....7	59.06.0103	10 nF	10%, 63V, PETP	
	C.....8	59.06.0683	68 nF	10%, 63V, PETP	
	C.....9	59.06.0103	10 nF	10%, 63V, PETP	
	C....10	59.06.0683	68 nF	10%, 63V, PETP	
	C....11	59.06.0104	100 nF	10%, 63V, PETP	
	C....12	59.06.0474	470 nF	10%, 63V, PETP	
	C....13	59.31.5225	2.2 uF	10%, 63V, PETP	
	C....14	59.31.5225	2.2 uF	10%, 63V, PETP	
	C....15	59.06.0472	4.7 nF	10%, 63V, PETP	
	C....16	59.26.5100	10 uF	20%, 25V, SAL	
	C....17	59.31.5225	2.2 uF	10%, 63V, PETP	
	C....18	59.26.0680	68 uF	20%, 6.3V, SAL	
	C....19	59.06.0474	470 nF	10%, 63V, PETP	
	C....20	59.22.3102	1000 uF	-20%, 10V, EL	
	C....21	59.22.3102	1000 uF	-20%, 10V, EL	
	C....22	59.22.3102	1000 uF	-20%, 10V, EL	
	C....23	59.22.3102	1000 uF	-20%, 10V, EL	
	C....24	59.47.2332	3.3 nF	5%, 160V, PP	
	C....25	59.06.0472	4.7 nF	10%, 63V, PETP	
	D.....1	50.04.0127	BAT 42	BAT 85, BAS 40-02	Ph,Sie,Tho
	D.....2	50.04.0127	BAT 42	BAT 85, BAS 40-02	Ph,Sie,Tho
	D.....3	50.04.0126	1N 4448		Fe,ITT,Ph,Sem,Te
	D.....4	50.04.1117	Z 12V		ITT,Mot,Ph,Te,Tho
	D.....5	50.04.0138	UF 4004	BYT 01-400, UES 1106	GI,Tho,Un
	D.....6	50.04.0138	UF 4004	BYT 01-400, UES 1106	GI,Tho,Un
	D.....7	50.04.0138	UF 4004	BYT 01-400, UES 1106	GI,Tho,Un
	D.....8	50.04.0138	UF 4004	BYT 01-400, UES 1106	GI,Tho,Un
	D.....9	50.04.0517	BYV 32		Mot,Ph
	D....10	50.04.1112	Z 5.1V		ITT,Mot,Ph,Te,Tho

S T U D E R (00) 89/04/20 PZ RECORD CURRENT SUPPLY PL 1.862.719.00 PAGE 1

IND.	POS.NO.	PART NO.	VALUE	SPECIFICATIONS / EQUIVALENT	MANUF.
	RA....1	58.05.0501	500 Ohm	10%	
	T.....1	1.022.617.00		Switching transformer 5V, 5A	St
	TP....1	54.02.0320		Test point	
	TP....2	54.02.0320		Test point	
	TP....3	54.02.0320		Test point	
	TP....4	54.02.0320		Test point	

CER=Ceramic, EL=Electrolytic, PETP=Polyesterfilm, PP=Polypropylen,
SAL=Solid Aluminium.

MANUFACTURER: GI=General Instruments, Fe=Fairchild, Fe=Ferranti,
IR=International Rectifier, ITT=Intermetal, Mot=Motorola,
NS=National Semiconductor, Ph=Philips, RCA=Radio Corporation
of America, Sem=Semicosem, SGS=SGS-Ates, Sie=Siemens,
Six=Siliconix, St=Studer, Te=Telefunken, Tho=Thomson,
Ti=Texas Instrument, Un=Unitrode.

ORIG 89/04/20

S T U D E R (00) 89/04/20 PZ RECORD CURRENT SUPPLY PL 1.862.719.00 PAGE 4

BLOCK DIAGRAM REPRODUCE CONTROLLER

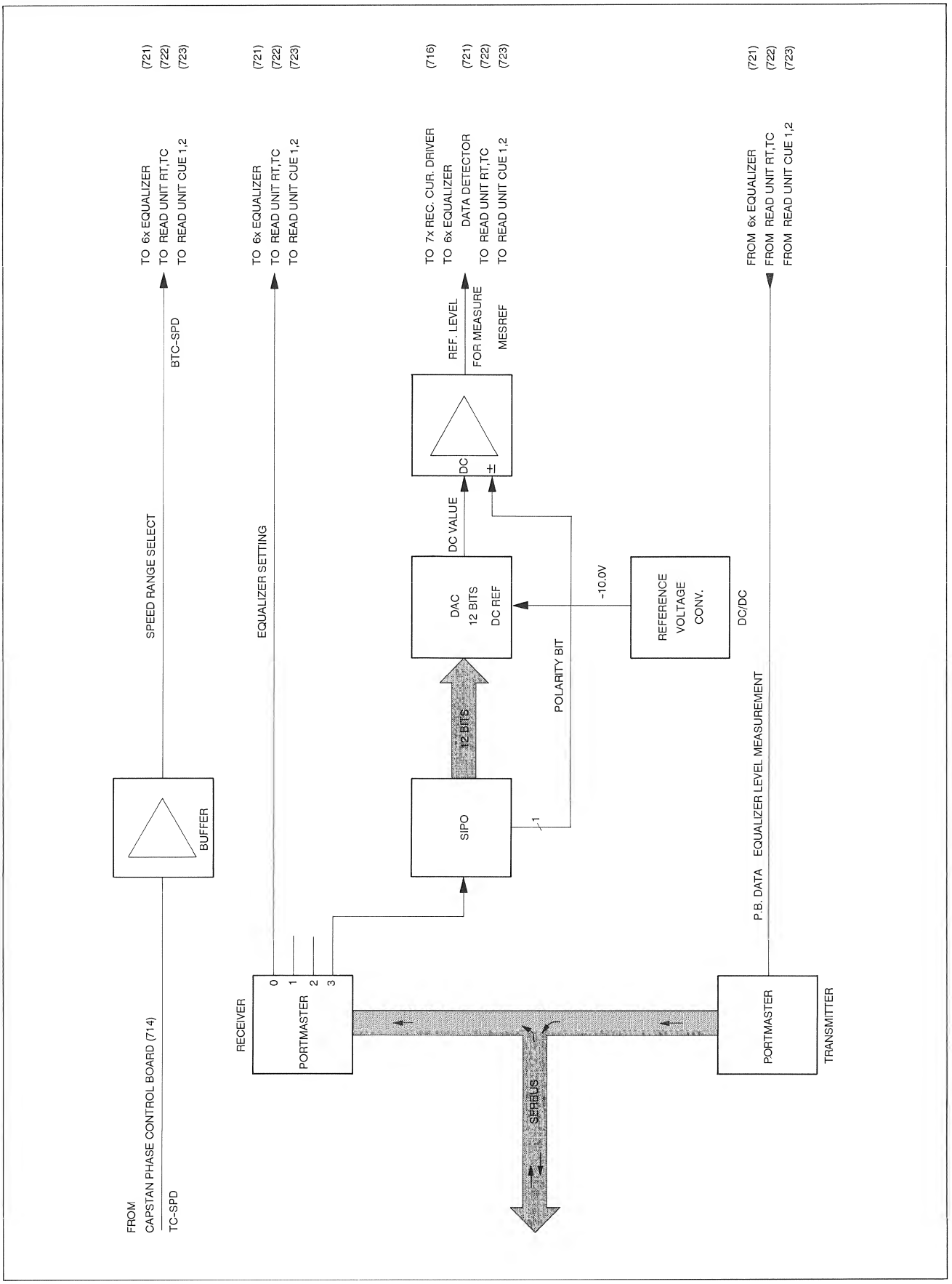

REPRODUCE CONTROLLER 1.862.720.00

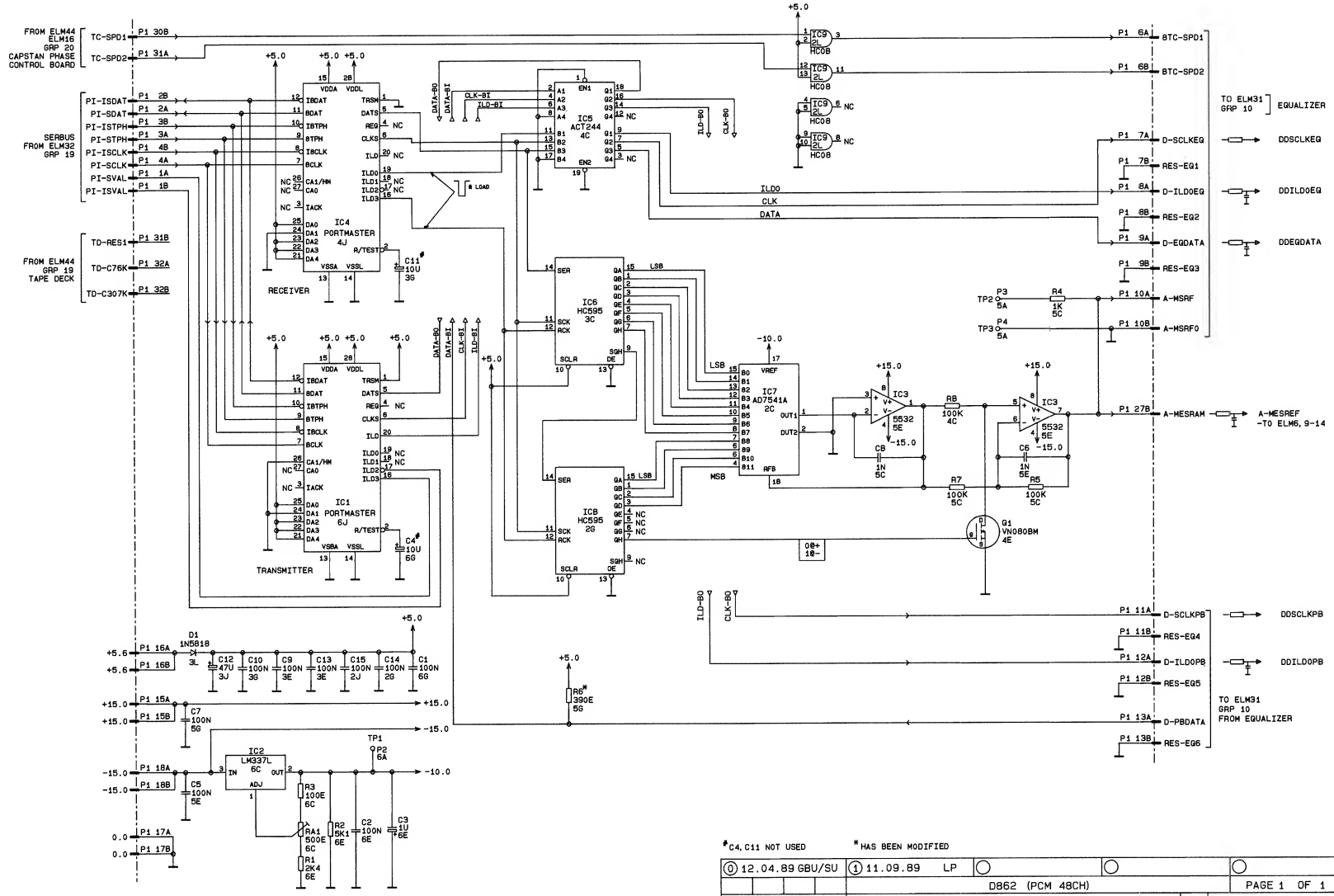

REPRODUCE CONTROLLER 1.862.720.00

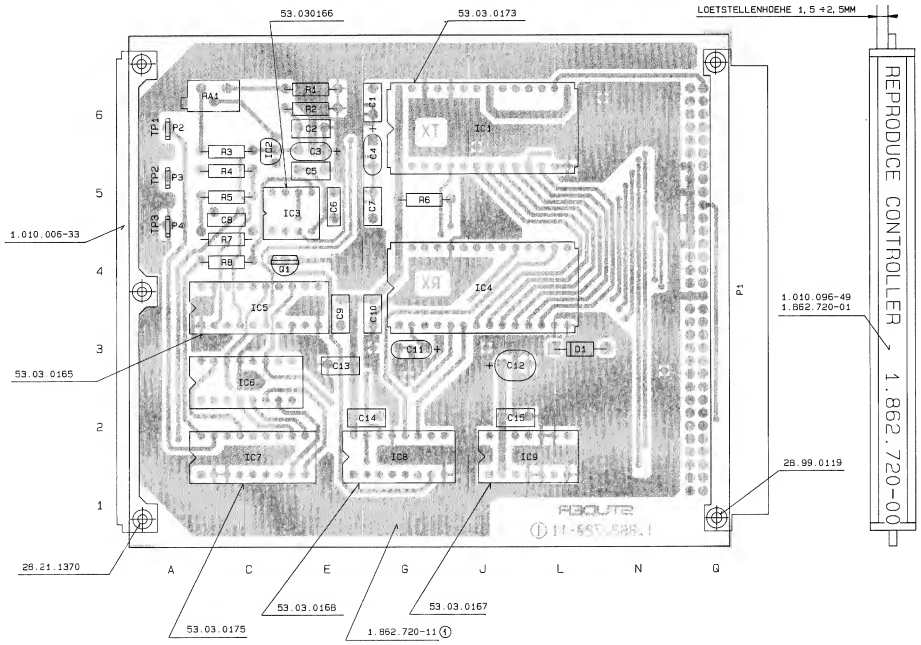

SCHILD 43.01.0108 AUFGEKLEBT
NACH FABRIKATIONSMUSTER

IND.	POS.NO.	PART NO.	VALUE	SPECIFICATIONS / EQUIVALENT	MANUF.
	C.....1	59.06.0104	100 nF	10% , 63V , PETP	
	C.....2	59.06.0104	100 nF	10% , 63V , PETP	
	C.....3	59.26.5109	1 uF	10% , 25V , Sal	
	C.....4		not used		
	C.....5	59.06.0104	100 nF	10% , 63V , PETP	
	C.....6	59.06.0102	1 nF	10% , 63V , PETP	
	C.....7	59.06.0104	100 nF	10% , 63V , PETP	
	C.....8	59.06.0102	1 nF	10% , 63V , PETP	
	C.....9	59.06.0104	100 nF	10% , 63V , PETP	
	C.....10	59.06.0104	100 nF	10% , 63V , PETP	
	C.....11		not used		
	C.....12	59.26.0470	47 uF	20% ,6,3V , Sal	
	C.....13	59.06.0104	100 nF	10% , 63V , PETP	
	C.....14	59.06.0104	100 nF	10% , 63V , PETP	
	C.....15	59.06.0104	100 nF	10% , 63V , PETP	
	D.....1	50.04.0512	1N 5818	1N 5819	Mot
	IC....1	50.50.0010	PORTMASTER		Dectro5wiss
	IC....2	50.10.0109	LM 337 LZ		N5
	IC....3	50.09.0106	5532 AN		Sig;Ex;Ra
	IC....4	50.50.0010	PORTMASTER		Dectro5wiss
	IC....5	50.17.7244	74ACT244		RCA;Fe
	IC....6	50.17.1595	74HC595		N5;505;TI
	IC....7	50.19.0102	AD 7541	MP7623	ADI;MN5
	IC....8	50.17.1595	74HC595		N5;505;TI
	IC....9	50.17.1008	74HC08		Mot;N5;Ph;RCA;505;TI;To
	P.....1	54.11.2004	Connector	2x32 Euro Print	
	Q.....1	50.03.1505	VN 0808	VN 0108	Fe;Six
	R.....1	57.11.3242	2,4 kOhm	2%	
	R.....2	57.11.3512	5,1 kOhm	5%	
	R.....3	57.11.3101	100 Ohm	2%	
	R.....4	57.11.3102	1 kOhm	5%	
	R.....5	57.11.3104	100 kOhm	1%	

IND.	POS.NO.	PART NO.	VALUE	SPECIFICATIONS / EQUIVALENT	MANUF.
(00)	R.....6	57.11.3103	10 kOhm	5%	
(01)	R.....6	57.11.3391	390 Ohm	5%	
	R.....7	57.11.3104	100 kOhm	1%	
	R.....8	57.11.3104	100 kOhm	1%	
	RA....1	58.05.0501	500 Ohm	Potentiometer 22-turn, 10%, linear	
	TP....1	54.02.0320	Testpoint		
	TP....2	54.02.0320	Testpoint		
	TP....3	54.02.0320	Testpoint		

(01) 89/09/11 Decreases of rise time D-FBDATA signal.

Sal=Solid Aluminium, PETP=Polyesterfilm.

MANUFACTURER: ADI=Analogue Devices Corp., Fe=Ferranti,
Ex=Exar,Mot=Motorola,MP5=Micro Power Systems,
N5=National Semiconductors, Ph=Philips,
Ra=Raytheon,RCA=Radio Corporation of America,
505=505/Atex,Sig=Signetics,Six=Siliconix,
TI= Texas Instruments, To=Toshiba.

ORIG 89/04/12 (01) 89/09/11

BLOCK DIAGRAM EQUALIZER, DATA DETECTOR

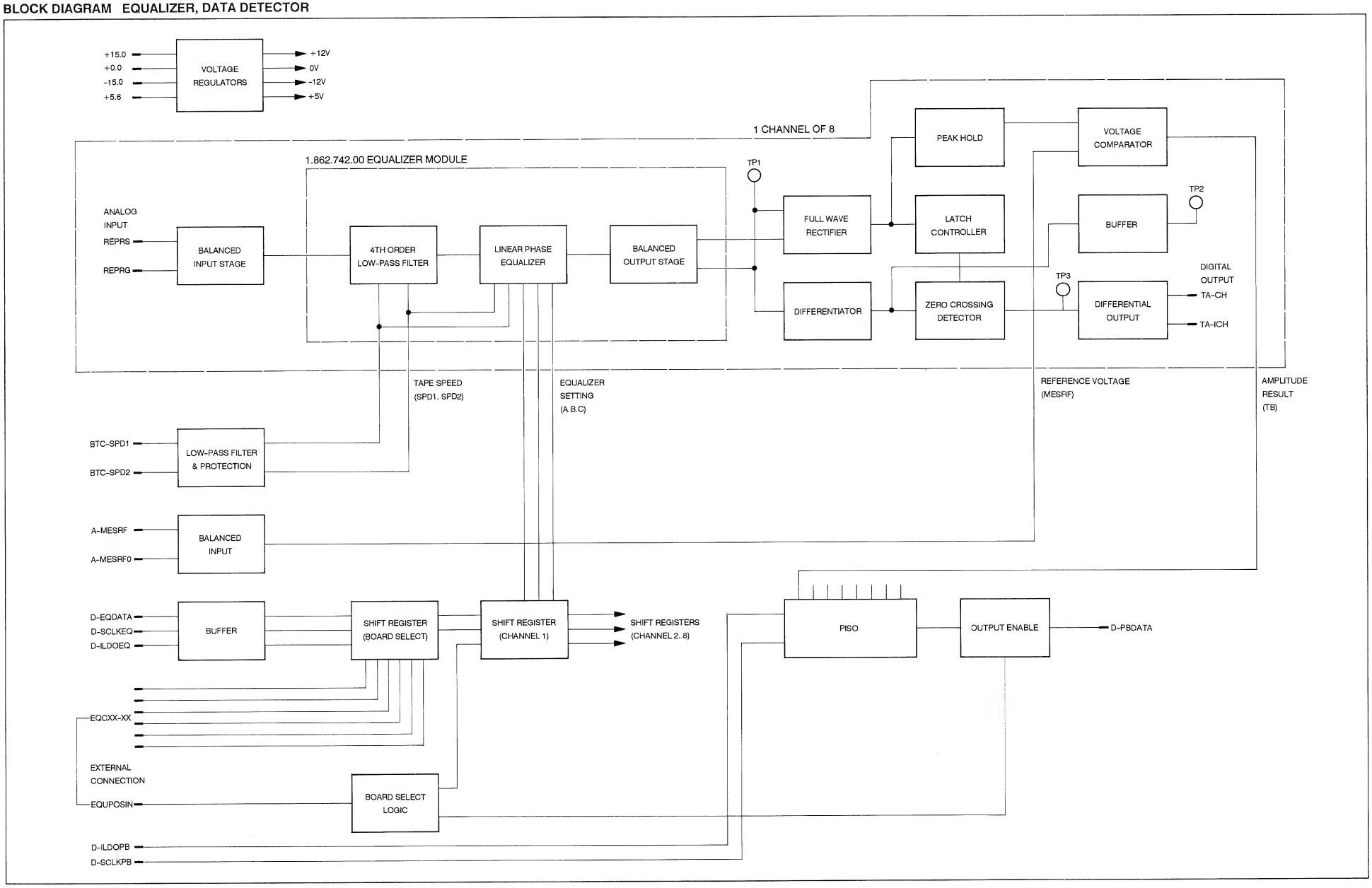

EQUALIZER, DATA DETECTOR 1.862.721.00

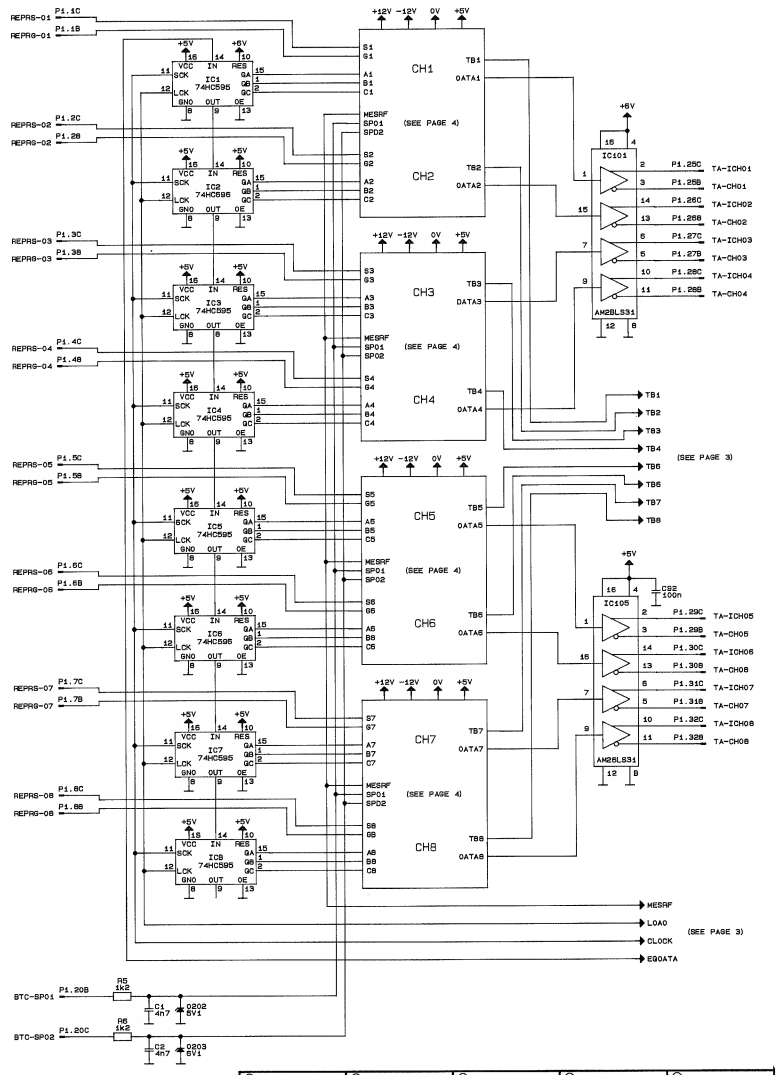

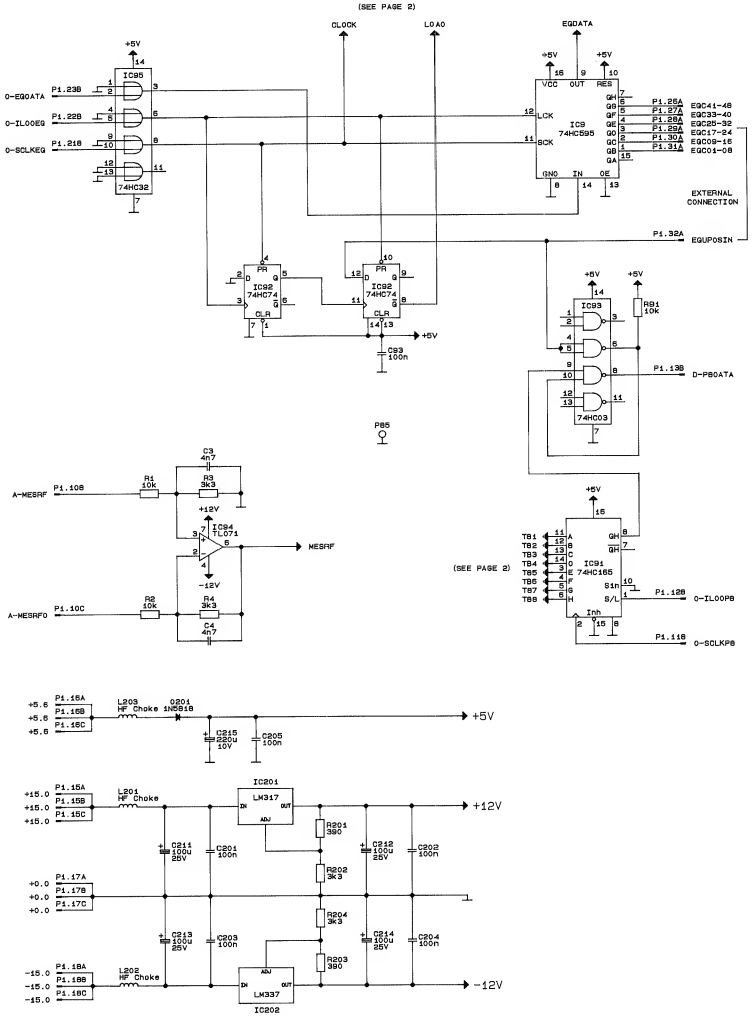

EQUALIZER, DATA DETECTOR 1.862.721.00

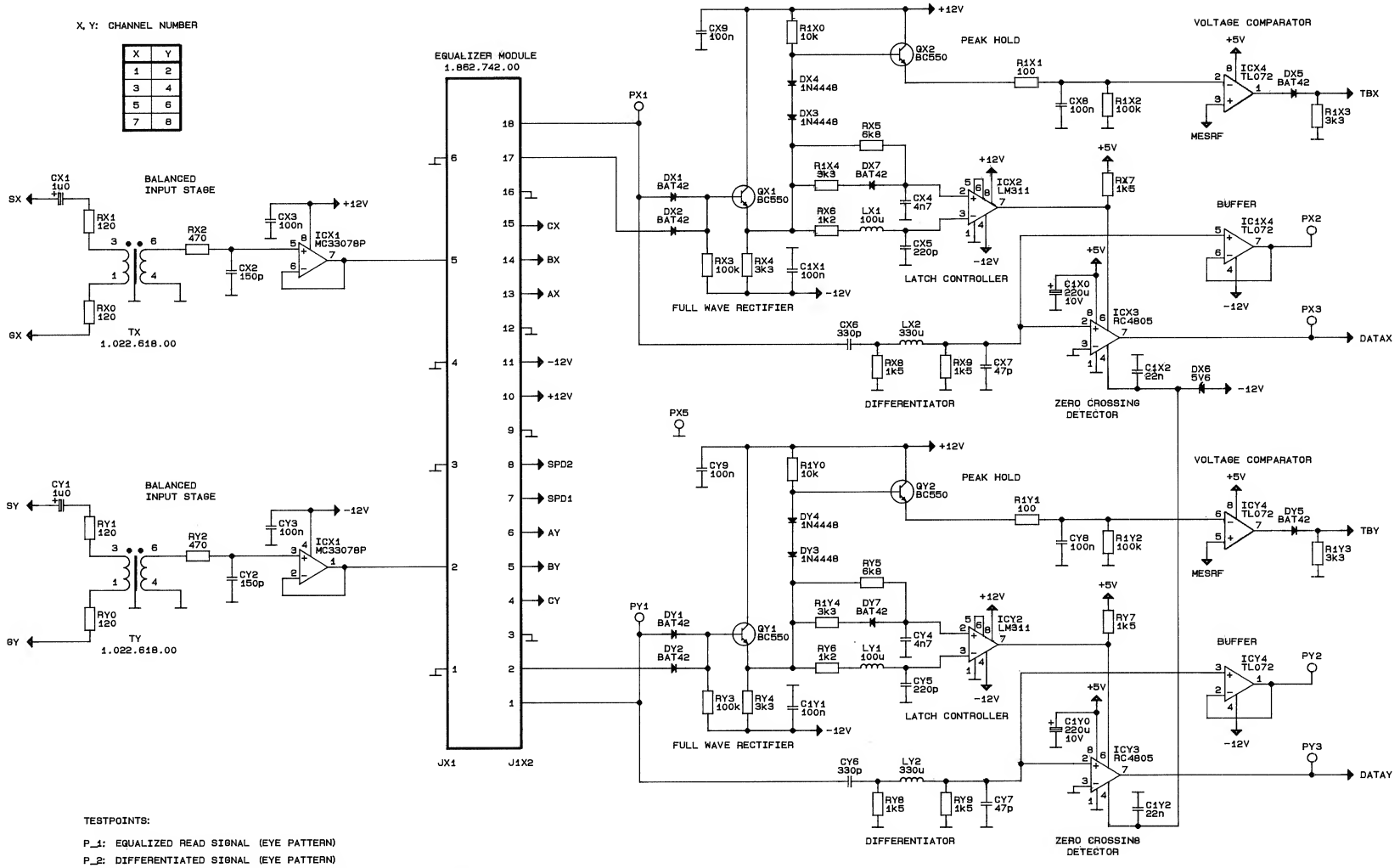

EQUALIZER, DATA DETECTOR 1.862.721.00

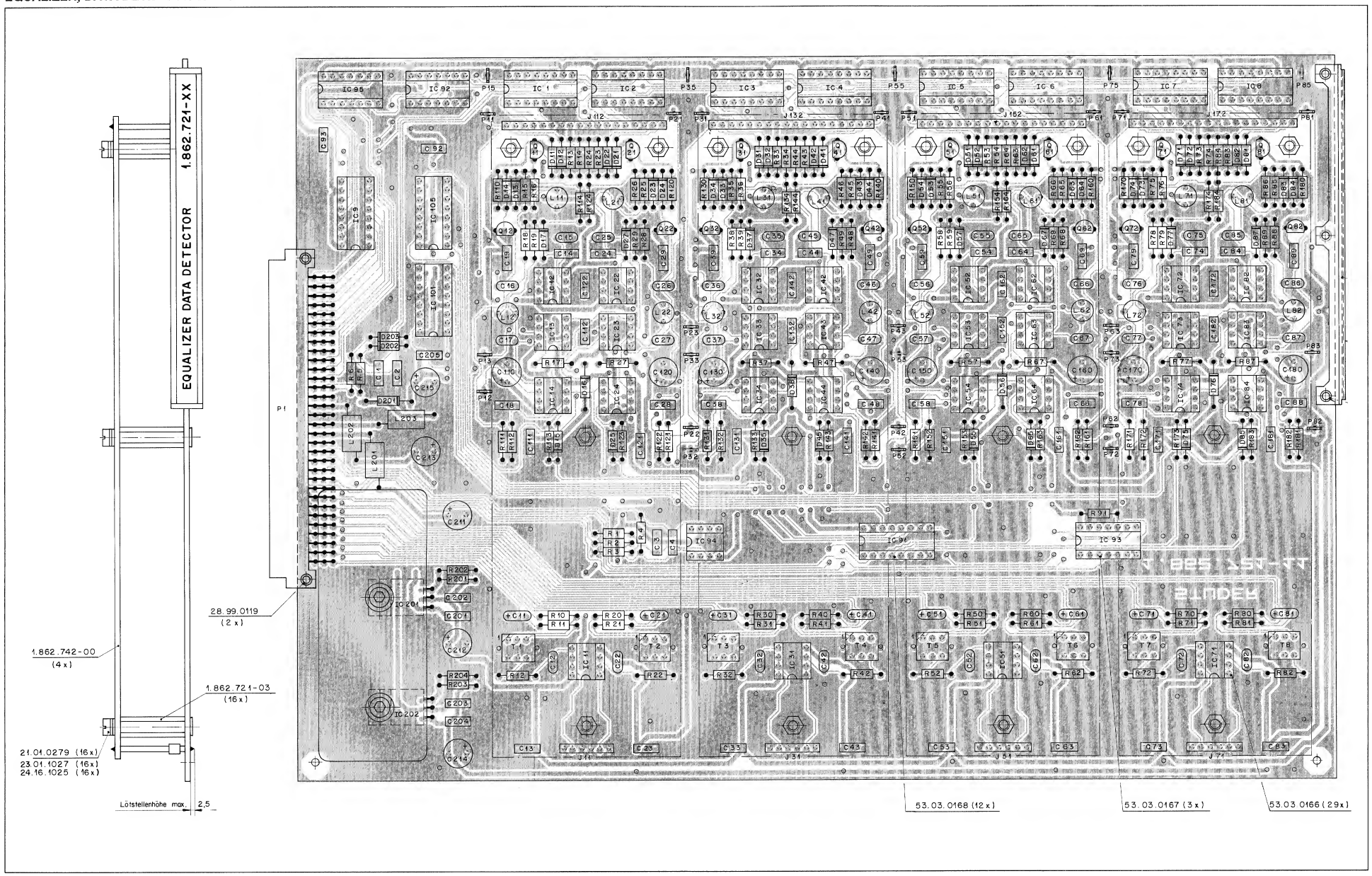

EQUALIZER, DATA DETECTOR 1.862.721.00

IND.	POS.NO.	PART NO.	VALUE	SPECIFICATIONS / EQUIVALENT	MANUF.
	A.....1	1.862.742.00		EQUALIZER MODUL	St
	A.....2	1.862.742.00		EQUALIZER MODUL	St
	A.....3	1.862.742.00		EQUALIZER MODUL	St
	A.....4	1.862.742.00		EQUALIZER MODUL	St
	C.....1	59.06.0472	4.7 nF	10%, 63V, PETP	
	C.....2	59.06.0472	4.7 nF	10%, 63V, PETP	
	C.....3	59.06.0472	4.7 nF	10%, 63V, PETP	
	C.....4	59.06.0472	4.7 nF	10%, 63V, PETP	
	C....11	59.26.9109	1 uF	20%, 40V, Sal	Ph
	C....12	59.34.4151	150 pF	5%, 63V, Cer	
	C....13	59.06.0104	100 nF	10%, 63V, PETP	
	C....14	59.06.0472	4.7 nF	10%, 63V, PETP	
	C....15	59.34.4221	220 pF	5%, 63V, Cer	
	C....16	59.34.4331	330 pF	5%, 63V, Cer	
	C....17	59.34.2470	47 pF	5%, 63V, Cer	
	C....18	59.06.0104	100 nF	10%, 63V, PETP	
	C....19	59.06.0104	100 nF	10%, 63V, PETP	
	C....21	59.26.9109	1 uF	20%, 40V, Sal	Ph
	C....22	59.34.4151	150 pF	5%, 63V, Cer	
	C....23	59.06.0104	100 nF	10%, 63V, PETP	
	C....24	59.06.0472	4.7 nF	10%, 63V, PETP	
	C....25	59.34.4221	220 pF	5%, 63V, Cer	
	C....26	59.34.4331	330 pF	5%, 63V, Cer	
	C....27	59.34.2470	47 pF	5%, 63V, Cer	
	C....28	59.06.0104	100 nF	10%, 63V, PETP	
	C....29	59.06.0104	100 nF	10%, 63V, PETP	
	C....31	59.26.9109	1 uF	20%, 40V, Sal	Ph
	C....32	59.34.4151	150 pF	5%, 63V, Cer	
	C....33	59.06.0104	100 nF	10%, 63V, PETP	
	C....34	59.06.0472	4.7 nF	10%, 63V, PETP	
	C....35	59.34.4221	220 pF	5%, 63V, Cer	
	C....36	59.34.4331	330 pF	5%, 63V, Cer	
	C....37	59.34.2470	47 pF	5%, 63V, Cer	
	C....38	59.06.0104	100 nF	10%, 63V, PETP	
	C....39	59.06.0104	100 nF	10%, 63V, PETP	
	C....41	59.26.9109	1 uF	20%, 40V, Sal	Ph

IND.	POS.NO.	PART NO.	VALUE	SPECIFICATIONS / EQUIVALENT	MANUF.
	C....42	59.34.4151	150 pF	5%, 63V, Cer	
	C....43	59.06.0104	100 nF	10%, 63V, PETP	
	C....44	59.06.0472	4.7 nF	10%, 63V, PETP	
	C....45	59.34.4221	220 pF	5%, 63V, Cer	
	C....46	59.34.4331	330 pF	5%, 63V, Cer	
	C....47	59.34.2470	47 pF	5%, 63V, Cer	
	C....48	59.06.0104	100 nF	10%, 63V, PETP	
	C....49	59.06.0104	100 nF	10%, 63V, PETP	
	C....51	59.26.9109	1 uF	20%, 40V, Sal	Ph
	C....52	59.34.4151	150 pF	5%, 63V, Cer	
	C....53	59.06.0104	100 nF	10%, 63V, PETP	
	C....54	59.06.0472	4.7 nF	10%, 63V, PETP	
	C....55	59.34.4221	220 pF	5%, 63V, Cer	
	C....56	59.34.4331	330 pF	5%, 63V, Cer	
	C....57	59.34.2470	47 pF	5%, 63V, Cer	
	C....58	59.06.0104	100 nF	10%, 63V, PETP	
	C....59	59.06.0104	100 nF	10%, 63V, PETP	
	C....61	59.26.9109	1 uF	20%, 40V, Sal	Ph
	C....62	59.34.4151	150 pF	5%, 63V, Cer	
	C....63	59.06.0104	100 nF	10%, 63V, PETP	
	C....64	59.06.0472	4.7 nF	10%, 63V, PETP	
	C....65	59.34.4221	220 pF	5%, 63V, Cer	
	C....66	59.34.4331	330 pF	5%, 63V, Cer	
	C....67	59.34.2470	47 pF	5%, 63V, Cer	
	C....68	59.06.0104	100 nF	10%, 63V, PETP	
	C....69	59.06.0104	100 nF	10%, 63V, PETP	
	C....71	59.26.9109	1 uF	20%, 40V, Sal	Ph
	C....72	59.34.4151	150 pF	5%, 63V, Cer	
	C....73	59.06.0104	100 nF	10%, 63V, PETP	
	C....74	59.06.0472	4.7 nF	10%, 63V, PETP	
	C....75	59.34.4221	220 pF	5%, 63V, Cer	
	C....76	59.34.4331	330 pF	5%, 63V, Cer	
	C....77	59.34.2470	47 pF	5%, 63V, Cer	
	C....78	59.06.0104	100 nF	10%, 63V, PETP	
	C....79	59.06.0104	100 nF	10%, 63V, PETP	
	C....81	59.26.9109	1 uF	20%, 40V, Sal	Ph
	C....82	59.34.4151	150 pF	5%, 63V, Cer	

IND.	POS.NO.	PART NO.	VALUE	SPECIFICATIONS / EQUIVALENT	MANUF.
	C....83	59.06.0104	100 nF	10%, 63V, PETP	
	C....84	59.06.0472	4.7 nF	10%, 63V, PETP	
	C....85	59.34.4221	220 pF	5%, 63V, Cer	
	C....86	59.34.4331	330 pF	5%, 63V, Cer	
	C....87	59.34.2470	47 pF	5%, 63V, Cer	
	C....88	59.06.0104	100 nF	10%, 63V, PETP	
	C....89	59.06.0104	100 nF	10%, 63V, PETP	
	C....92	59.06.0104	100 nF	10%, 63V, PETP	
	C....93	59.06.0104	100 nF	10%, 63V, PETP	
	C...110	59.22.3221	220 uF	-20%, 10V, El	
	C...111	59.06.0104	100 nF	10%, 63V, PETP	
	C...112	59.06.0223	22 nF	10%, 63V, PETP	
	C...120	59.22.3221	220 uF	-20%, 10V, El	
	C...121	59.06.0104	100 nF	10%, 63V, PETP	
	C...122	59.06.0223	22 nF	10%, 63V, PETP	
	C...130	59.22.3221	220 uF	-20%, 10V, El	
	C...131	59.06.0104	100 nF	10%, 63V, PETP	
	C...132	59.06.0223	22 nF	10%, 63V, PETP	
	C...140	59.22.3221	220 uF	-20%, 10V, El	
	C...141	59.06.0104	100 nF	10%, 63V, PETP	
	C...142	59.06.0223	22 nF	10%, 63V, PETP	
	C...150	59.22.3221	220 uF	-20%, 10V, El	
	C...151	59.06.0104	100 nF	10%, 63V, PETP	
	C...152	59.06.0223	22 nF	10%, 63V, PETP	
	C...160	59.22.3221	220 uF	-20%, 10V, El	
	C...161	59.06.0104	100 nF	10%, 63V, PETP	
	C...162	59.06.0223	22 nF	10%, 63V, PETP	
	C...170	59.22.3221	220 uF	-20%, 10V, El	
	C...171	59.06.0104	100 nF	10%, 63V, PETP	
	C...172	59.06.0223	22 nF	10%, 63V, PETP	
	C...180	59.22.3221	220 uF	-20%, 10V, El	
	C...181	59.06.0104	100 nF	10%, 63V, PETP	
	C...182	59.06.0223	22 nF	10%, 63V, PETP	
	C...201	59.06.0104	100 nF	10%, 63V, PETP	
	C...202	59.06.0104	100 nF	10%, 63V, PETP	
	C...203	59.06.0104	100 nF	10%, 63V, PETP	
	C...204	59.06.0104	100 nF	10%, 63V, PETP	

IND.	POS.NO.	PART NO.	VALUE	SPECIFICATIONS / EQUIVALENT	MANUF.
	C...205	59.06.0104	100 nF	10%, 63V, PETP	
	C...211	59.22.5101	100 uF	-20%, 25V, El	
	C...212	59.22.5101	100 uF	-20%, 25V, El	
	C...213	59.22.5101	100 uF	-20%, 25V, El	
	C...214	59.22.5101	100 uF	-20%, 25V, El	
	C...215	59.22.3221	220 uF	-20%, 10V, El	
	D....11	50.04.0127	BAT 42	BAT 85	Ph,SGS,Tho
	D....12	50.04.0127	BAT 42	BAT 85	Ph,SGS,Tho
	D....13	50.04.0125	1N 4448		Fc,ITT,Ph,Tf
	D....14	50.04.0125	1N 4448		Fc,ITT,Ph,Tf
	D....15	50.04.0127	BAT 42	BAT 85	Ph,SGS,Tho
	D....16	50.04.1504	5.6 V	Z, 1.3W	ITT,Mot,Ph,SGS,Tf,Tho
	D....17	50.04.0127	BAT 42	BAT 85	Ph,SGS,Tho
	D....21	50.04.0127	BAT 42	BAT 85	Ph,SGS,Tho
	D....22	50.04.0127	BAT 42	BAT 85	Ph,SGS,Tho
	D....23	50.04.0125	1N 4448		Fc,ITT,Ph,Tf
	D....24	50.04.0125	1N 4448		Fc,ITT,Ph,Tf
	D....25	50.04.0127	BAT 42	BAT 85	Ph,SGS,Tho
	D....27	50.04.0127	BAT 42	BAT 85	Ph,SGS,Tho
	D....31	50.04.0127	BAT 42	BAT 85	Ph,SGS,Tho
	D....32	50.04.0127	BAT 42	BAT 85	Ph,SGS,Tho
	D....33	50.04.0125	1N 4448		Fc,ITT,Ph,Tf
	D....34	50.04.0125	1N 4448		Fc,ITT,Ph,Tf
	D....35	50.04.0127	BAT 42	BAT 85	Ph,SGS,Tho
	D....36	50.04.1504	5.6 V	Z, 1.3W	ITT,Mot,Ph,SGS,Tf,Tho
	D....37	50.04.0127	BAT 42	BAT 85	Ph,SGS,Tho
	D....41	50.04.0127	BAT 42	BAT 85	Ph,SGS,Tho
	D....42	50.04.0127	BAT 42	BAT 85	Ph,SGS,Tho
	D....43	50.04.0125	1N 4448		Fc,ITT,Ph,Tf
	D....44	50.04.0125	1N 4448		Fc,ITT,Ph,Tf
	D....45	50.04.0127	BAT 42	BAT 85	Ph,SGS,Tho
	D....47	50.04.0127	BAT 42	BAT 85	Ph,SGS,Tho
	D....51	50.04.0127	BAT 42	BAT 85	Ph,SGS,Tho
	D....52	50.04.0127	BAT 42	BAT 85	Ph,SGS,Tho
	D....53	50.04.0125	1N 4448		Fc,ITT,Ph,Tf
	D....54	50.04.0125	1N 4448		Fc,ITT,Ph,Tf

IND.	POS.NO.	PART NO.	VALUE	SPECIFICATIONS / EQUIVALENT	MANUF.
	D....55	50.04.0127	BAT 42	BAT 85	Ph,SGS,Tho
	D....56	50.04.1504	5.6 V	Z, 1.3W	ITT,Mot,Ph,SGS,Tf,Tho
	D....57	50.04.0127	BAT 42	BAT 85	Ph,SGS,Tho
	D....61	50.04.0127	BAT 42	BAT 85	Ph,SGS,Tho
	D....62	50.04.0127	BAT 42	BAT 85	Ph,SGS,Tho
	D....63	50.04.0125	1N 4448		Fc,ITT,Ph,Tf
	D....64	50.04.0125	1N 4448		Fc,ITT,Ph,Tf
	D....65	50.04.0127	BAT 42	BAT 85	Ph,SGS,Tho
	D....67	50.04.0127	BAT 42	BAT 85	Ph,SGS,Tho
	D....71	50.04.0127	BAT 42	BAT 85	Ph,SGS,Tho
	D....72	50.04.0127	BAT 42	BAT 85	Ph,SGS,Tho
	D....73	50.04.0125	1N 4448		Fc,ITT,Ph,Tf
	D....74	50.04.0125	1N 4448		Fc,ITT,Ph,Tf
	D....75	50.04.0127	BAT 42	BAT 85	Ph,SGS,Tho
	D....76	50.04.1504	5.6 V	Z, 1.3W	ITT,Mot,Ph,SGS,Tf,Tho
	D....77	50.04.0127	BAT 42	BAT 85	Ph,SGS,Tho
	D....81	50.04.0127	BAT 42	BAT 85	Ph,SGS,Tho
	D....82	50.04.0127	BAT 42	BAT 85	Ph,SGS,Tho
	D....83	50.04.0125	1N 4448		Fc,ITT,Ph,Tf
	D....84	50.04.0125	1N 4448		Fc,ITT,Ph,Tf
	D....85	50.04.0127	BAT 42	BAT 85	Ph,SGS,Tho
	D....87	50.04.0127	BAT 42	BAT 85	Ph,SGS,Tho
	D...201	50.04.0512	1N 5818	1N 5819	Mot
	D...202	50.04.1112	5.1 V	Z, 0.4W	ITT,Mot,Ph,SGS,Tf,Tho
	D...203	50.04.1112	5.1 V	Z, 0.4W	ITT,Mot,Ph,SGS,Tf,Tho
	IC....1	50.17.1595	74 HC 595		NS,SGS,Tho,TI
	IC....2	50.17.1595	74 HC 595		NS,SGS,Tho,TI
	IC....3	50.17.1595	74 HC 595		NS,SGS,Tho,TI
	IC....4	50.17.1595	74 HC 595		NS,SGS,Tho,TI
	IC....5	50.17.1595	74 HC 595		NS,SGS,Tho,TI
	IC....6	50.17.1595	74 HC 595		NS,SGS,Tho,TI
	IC....7	50.17.1595	74 HC 595		NS,SGS,Tho,TI
	IC....8	50.17.1595	74 HC 595		NS,SGS,Tho,TI
	IC....9	50.17.1595	74 HC 595		NS,SGS,Tho,TI
	IC...11	50.09.0117	MC 33078 P		Mot
	IC...12	50.11.0114	LM 311 N		Mot

IND.	POS.NO.	PART NO.	VALUE	SPECIFICATIONS / EQUIVALENT	MANUF.
	IC...13	50.11.0126	NE 5105N		Ph
	IC...14	50.09.0101	TL 072		Mot,SGS,TI
	IC...22	50.11.0114	LM 311 N		Mot
	IC...23	50.11.0126	NE 5105N		Ph
	IC...24	50.09.0101	TL 072		Mot,SGS,TI
	IC...31	50.09.0117	MC 33078 P		Mot
	IC...32	50.11.0114	LM 311 N		Mot
	IC...33	50.11.0126	NE 5105N		Ph
	IC...34	50.09.0101	TL 072		Mot,SGS,TI
	IC...42	50.11.0114	LM 311 N		Mot
	IC...43	50.11.0126	NE 5105N		Ph
	IC...44	50.09.0101	TL 072		Mot,SGS,TI
	IC...51	50.09.0117	MC 33078 P		Mot
	IC...52	50.11.0114	LM 311 N		Mot
	IC...53	50.11.0126	NE 5105N		Ph
	IC...54	50.09.0101	TL 072		Mot,SGS,TI
	IC...62	50.11.0114	LM 311 N		Mot
	IC...63	50.11.0126	NE 5105N		Ph
	IC...64	50.09.0101	TL 072		Mot,SGS,TI
	IC...71	50.09.0117	MC 33078 P		Mot
	IC...72	50.11.0114	LM 311 N		Mot
	IC...73	50.11.0126	NE 5105N		Ph
	IC...74	50.09.0101	TL 072		Mot,SGS,TI
	IC...82	50.11.0114	LM 311 N		Mot
	IC...83	50.11.0126	NE 5105N		Ph
	IC...84	50.09.0101	TL 072		Mot,SGS,TI
	IC...91	50.17.1165	74 HC 165		NS,Ph,RCA,TI
	IC...92	50.17.1074	74 HC 74		Mot,NS,Ph,RCA,SGS,Tho,TI,To
	IC...93	50.17.1003	74 HC 03		Mot,NS,TI
	IC...94	50.09.0103	TL 071		TI
	IC...95	50.17.1032	74 HC 32		Mot,NS,Ph,RCA,SGS,Tho,TI,To
	IC..101	50.15.0108	AM26LS31		AMD,Mot,TI
	IC..105	50.15.0108	AM26LS31		AMD,Mot,TI
	IC..201	50.10.0104	LM 317		Mot,NS,SGS,Tho,TI
	IC..202	50.10.0105	LM 337		Mot,NS,SGS,Tho,TI
	J....11	53.03.0218	Connector	6 pcs	

IND.	POS.NO.	PART NO.	VALUE	SPECIFICATIONS / EQUIVALENT	MANUF.
	J....31	53.03.0218	Connector	6 pcs	
	J....51	53.03.0218	Connector	6 pcs	
	J....71	53.03.0218	Connector	6 pcs	
	J...112	53.03.0218	Connector	18 pcs	
	J...132	53.03.0218	Connector	18 pcs	
	J...152	53.03.0218	Connector	18 pcs	
	J...172	53.03.0218	Connector	18 pcs	
	L....11	62.02.3101	100 uH	10% note 1	TDK
	L....12	62.02.3331	330 uH	10%, note 2	TDK
	L....21	62.02.3101	100 uH	10% note 1	TDK
	L....22	62.02.3331	330 uH	10%, note 2	TDK
	L....31	62.02.3101	100 uH	10% note 1	TDK
	L....32	62.02.3331	330 uH	10%, note 2	TDK
	L....41	62.02.3101	100 uH	10% note 1	TDK
	L....42	62.02.3331	330 uH	10%, note 2	TDK
	L....51	62.02.3101	100 uH	10% note 1	TDK
	L....52	62.02.3331	330 uH	10%, note 2	TDK
	L....61	62.02.3101	100 uH	10% note 1	TDK
	L....62	62.02.3331	330 uH	10%, note 2	TDK
	L....71	62.02.3101	100 uH	10% note 1	TDK
	L....72	62.02.3331	330 uH	10%, note 2	TDK
	L....81	62.02.3101	100 uH	10% note 1	TDK
	L....82	62.02.3331	330 uH	10%, note 2	TDK
	L...201	62.01.0115	HF Choke	note 3	Ph
	L...202	62.01.0115	HF Choke	note 3	Ph
	L...203	62.01.0115	HF Choke	note 3	Ph
	P.....1	54.01.0358	Connector	Eurocard, 96-pin, right angle	
	P....11	54.02.0320	Connector	Faeton	
	P....12	54.02.0320	Connector	Faeton	
	P....13	54.02.0320	Connector	Faeton	
	P....15	54.02.0320	Connector	Faeton	
	P....21	54.02.0320	Connector	Faeton	
	P....22	54.02.0320	Connector	Faeton	
	P....23	54.02.0320	Connector	Faeton	
	P....31	54.02.0320	Connector	Faeton	

IND.	POS.NO.	PART NO.	VALUE	SPECIFICATIONS / EQUIVALENT	MANUF.
	P....32	54.02.0320	Connector	Faeton	
	P....33	54.02.0320	Connector	Faeton	
	P....35	54.02.0320	Connector	Faeton	
	P....41	54.02.0320	Connector	Faeton	
	P....42	54.02.0320	Connector	Faeton	
	P....43	54.02.0320	Connector	Faeton	
	P....51	54.02.0320	Connector	Faeton	
	P....52	54.02.0320	Connector	Faeton	
	P....53	54.02.0320	Connector	Faeton	
	P....55	54.02.0320	Connector	Faeton	
	P....61	54.02.0320	Connector	Faeton	
	P....62	54.02.0320	Connector	Faeton	
	P....63	54.02.0320	Connector	Faeton	
	P....71	54.02.0320	Connector	Faeton	
	P....72	54.02.0320	Connector	Faeton	
	P....73	54.02.0320	Connector	Faeton	
	P....75	54.02.0320	Connector	Faeton	
	P....81	54.02.0320	Connector	Faeton	
	P....82	54.02.0320	Connector	Faeton	
	P....83	54.02.0320	Connector	Faeton	
	P....85	54.02.0320	Connector	Faeton	
	Q....11	50.03.0497	BC 550	E 6328	Sie
	Q....12	50.03.0497	BC 550	E 6328	Sie
	Q....21	50.03.0497	BC 550	E 6328	Sie
	Q....22	50.03.0497	BC 550	E 6328	Sie
	Q....31	50.03.0497	BC 550	E 6328	Sie
	Q....32	50.03.0497	BC 550	E 6328	Sie
	Q....41	50.03.0497	BC 550	E 6328	Sie
	Q....42	50.03.0497	BC 550	E 6328	Sie
	Q....51	50.03.0497	BC 550	E 6328	Sie
	Q....52	50.03.0497	BC 550	E 6328	Sie
	Q....61	50.03.0497	BC 550	E 6328	Sie
	Q....62	50.03.0497	BC 550	E 6328	Sie
	Q....71	50.03.0497	BC 550	E 6328	Sie
	Q....72	50.03.0497	BC 550	E 6328	Sie
	Q....81	50.03.0497	BC 550	E 6328	Sie

IND.	POS.NO.	PART NO.	VALUE	SPECIFICATIONS / EQUIVALENT	MANUF.
	Q....82	50.03.0497	BC 550	E 6328	Sie
	R.....1	57.11.3103	10 kOhm	1%, MF	
	R.....2	57.11.3103	10 kOhm	1%, MF	
	R.....3	57.11.3332	3.3 kOhm	1%, MF	
	R.....4	57.11.3332	3.3 kOhm	1%, MF	
	R.....5	57.11.3122	1.2 kOhm	1%, MF	
	R.....6	57.11.3122	1.2 kOhm	1%, MF	
	R....10	57.11.3121	120 Ohm	1%, MF	
	R....11	57.11.3121	120 Ohm	1%, MF	
	R....12	57.11.3471	470 Ohm	1%, MF	
	R....13	57.11.3104	100 kOhm	1%, MF	
	R....14	57.11.3332	3.3 kOhm	1%, MF	
	R....15	57.11.3682	6.8 kOhm	1%, MF	
	R....16	57.11.3122	1.2 kOhm	1%, MF	
	R....17	57.11.3152	1.5 kOhm	1%, MF	
	R....18	57.11.3152	1.5 kOhm	1%, MF	
	R....19	57.11.3152	1.5 kOhm	1%, MF	
	R....20	57.11.3121	120 Ohm	1%, MF	
	R....21	57.11.3121	120 Ohm	1%, MF	
	R....22	57.11.3471	470 Ohm	1%, MF	
	R....23	57.11.3104	100 kOhm	1%, MF	
	R....24	57.11.3332	3.3 kOhm	1%, MF	
	R....25	57.11.3682	6.8 kOhm	1%, MF	
	R....26	57.11.3122	1.2 kOhm	1%, MF	
	R....27	57.11.3152	1.5 kOhm	1%, MF	
	R....28	57.11.3152	1.5 kOhm	1%, MF	
	R....29	57.11.3152	1.5 kOhm	1%, MF	
	R....30	57.11.3121	120 Ohm	1%, MF	
	R....31	57.11.3121	120 Ohm	1%, MF	
	R....32	57.11.3471	470 Ohm	1%, MF	
	R....33	57.11.3104	100 kOhm	1%, MF	
	R....34	57.11.3332	3.3 kOhm	1%, MF	
	R....35	57.11.3682	6.8 kOhm	1%, MF	
	R....36	57.11.3122	1.2 kOhm	1%, MF	
	R....37	57.11.3152	1.5 kOhm	1%, MF	
	R....38	57.11.3152	1.5 kOhm	1%, MF	

IND.	POS.NO.	PART NO.	VALUE	SPECIFICATIONS / EQUIVALENT	MANUF.
	R....39	57.11.3152	1.5 kOhm	1%, MF	
	R....40	57.11.3121	120 Ohm	1%, MF	
	R....41	57.11.3121	120 Ohm	1%, MF	
	R....42	57.11.3471	470 Ohm	1%, MF	
	R....43	57.11.3104	100 kOhm	1%, MF	
	R....44	57.11.3332	3.3 kOhm	1%, MF	
	R....45	57.11.3682	6.8 kOhm	1%, MF	
	R....46	57.11.3122	1.2 kOhm	1%, MF	
	R....47	57.11.3152	1.5 kOhm	1%, MF	
	R....48	57.11.3152	1.5 kOhm	1%, MF	
	R....49	57.11.3152	1.5 kOhm	1%, MF	
	R....50	57.11.3121	120 Ohm	1%, MF	
	R....51	57.11.3121	120 Ohm	1%, MF	
	R....52	57.11.3471	470 Ohm	1%, MF	
	R....53	57.11.3104	100 kOhm	1%, MF	
	R....54	57.11.3332	3.3 kOhm	1%, MF	
	R....55	57.11.3682	6.8 kOhm	1%, MF	
	R....56	57.11.3122	1.2 kOhm	1%, MF	
	R....57	57.11.3152	1.5 kOhm	1%, MF	
	R....58	57.11.3152	1.5 kOhm	1%, MF	
	R....59	57.11.3152	1.5 kOhm	1%, MF	
	R....60	57.11.3121	120 Ohm	1%, MF	
	R....61	57.11.3121	120 Ohm	1%, MF	
	R....62	57.11.3471	470 Ohm	1%, MF	
	R....63	57.11.3104	100 kOhm	1%, MF	
	R....64	57.11.3332	3.3 kOhm	1%, MF	
	R....65	57.11.3682	6.8 kOhm	1%, MF	
	R....66	57.11.3122	1.2 kOhm	1%, MF	
	R....67	57.11.3152	1.5 kOhm	1%, MF	
	R....68	57.11.3152	1.5 kOhm	1%, MF	
	R....69	57.11.3152	1.5 kOhm	1%, MF	
	R....70	57.11.3121	120 Ohm	1%, MF	
	R....71	57.11.3121	120 Ohm	1%, MF	
	R....72	57.11.3471	470 Ohm	1%, MF	
	R....73	57.11.3104	100 kOhm	1%, MF	
	R....74	57.11.3332	3.3 kOhm	1%, MF	
	R....75	57.11.3682	6.8 kOhm	1%, MF	
	R....76	57.11.3122	1.2 kOhm	1%, MF	
	R....77	57.11.3152	1.5 kOhm	1%, MF	
	R....78	57.11.3152	1.5 kOhm	1%, MF	
	R....79	57.11.3152	1.5 kOhm	1%, MF	
	R....80	57.11.3121	120 Ohm	1%, MF	
	R....81	57.11.3121	120 Ohm	1%, MF	
	R....82	57.11.3471	470 Ohm	1%, MF	
	R....83	57.11.3104	100 kOhm	1%, MF	
	R....84	57.11.3332	3.3 kOhm	1%, MF	
	R....85	57.11.3682	6.8 kOhm	1%, MF	
	R....86	57.11.3122	1.2 kOhm	1%, MF	
	R....87	57.11.3152	1.5 kOhm	1%, MF	
	R....88	57.11.3152	1.5 kOhm	1%, MF	
	R....89	57.11.3152	1.5 kOhm	1%, MF	
	R....91	57.11.3103	10 kOhm	1%, MF	
	R...110	57.11.3103	10 kOhm	1%, MF	
	R...111	57.11.3101	100 Ohm	1%, MF	
	R...112	57.11.3104	100 kOhm	1%, MF	
	R...113	57.11.3332	3.3 kOhm	1%, MF	
	R...114	57.11.3332	3.3 kOhm	1%, MF	
	R...120	57.11.3103	10 kOhm	1%, MF	
	R...121	57.11.3101	100 Ohm	1%, MF	
	R...122	57.11.3104	100 kOhm	1%, MF	
	R...123	57.11.3332	3.3 kOhm	1%, MF	
	R...124	57.11.3332	3.3 kOhm	1%, MF	
	R...130	57.11.3103	10 kOhm	1%, MF	
	R...131	57.11.3101	100 Ohm	1%, MF	
	R...132	57.11.3104	100 kOhm	1%, MF	
	R...133	57.11.3332	3.3 kOhm	1%, MF	
	R...134	57.11.3332	3.3 kOhm	1%, MF	
	R...140	57.11.3103	10 kOhm	1%, MF	
	R...141	57.11.3101	100 Ohm	1%, MF	
	R...142	57.11.3104	100 kOhm	1%, MF	
	R...143	57.11.3332	3.3 kOhm	1%, MF	
	R...144	57.11.3332	3.3 kOhm	1%, MF	
	R...150	57.11.3103	10 kOhm	1%, MF	
	R...151	57.11.3101	100 Ohm	1%, MF	
	R...152	57.11.3104	100 kOhm	1%, MF	
	R...153	57.11.3332	3.3 kOhm	1%, MF	
	R...154	57.11.3332	3.3 kOhm	1%, MF	
	R...160	57.11.3103	10 kOhm	1%, MF	
	R...161	57.11.3101	100 Ohm	1%, MF	
	R...162	57.11.3104	100 kOhm	1%, MF	
	R...163	57.11.3332	3.3 kOhm	1%, MF	
	R...164	57.11.3332	3.3 kOhm	1%, MF	
	R...170	57.11.3103	10 kOhm	1%, MF	
	R...171	57.11.3101	100 Ohm	1%, MF	
	R...172	57.11.3104	100 kOhm	1%, MF	
	R...173	57.11.3332	3.3 kOhm	1%, MF	
	R...174	57.11.3332	3.3 kOhm	1%, MF	
	R...180	57.11.3103	10 kOhm	1%, MF	
	R...181	57.11.3101	100 Ohm	1%, MF	
	R...182	57.11.3104	100 kOhm	1%, MF	
	R...183	57.11.3332	3.3 kOhm	1%, MF	
	R...184	57.11.3332	3.3 kOhm	1%, MF	
	R...201	57.11.3391	390 Ohm	1%, MF	
	R...202	57.11.3332	3.3 kOhm	1%, MF	
	R...203	57.11.3391	390 Ohm	1%, MF	
	R...204	57.11.3332	3.3 kOhm	1%, MF	
	T.....1	1.022.618.00		Input Transformer	St
	T.....2	1.022.618.00		Input Transformer	St
	T.....3	1.022.618.00		Input Transformer	St
	T.....4	1.022.618.00		Input Transformer	St
	T.....5	1.022.618.00		Input Transformer	St
	T.....6	1.022.618.00		Input Transformer	St
	T.....7	1.022.618.00		Input Transformer	St
	T.....8	1.022.618.00		Input Transformer	St

IND.	POS.NO.	PART NO.	VALUE	SPECIFICATIONS / EQUIVALENT	MANUF.

Note 1: TDK order number: EL 0606 SKI - 101 K

Note 2: TDK order number: EL 0606 SKI - 331 K

Note 3: Philips order number: 4312 020 36700

Cer=Ceramic, El=Electrolytic, MF=Metalfilm, PETP=Polyesterfilm, Sal=Solid Aluminium

Manufacturers: AMD=Advanced Micro Devices, Fc=Fairchild, ITT=Intermetall, Mot=Motorola, NS=National Semiconductors, Ph=Philips, RCA=Radio Corporation of America, Ra=Raytheon, SGS=SGS/Ates, Sie=Siemens, St=Studer, Tf=Telefunken, Tho=Thomson, TI=Texas Instruments, To=Toshiba.

ORIG 89/06/01

READ UNIT RT/TC 1.862.722.00

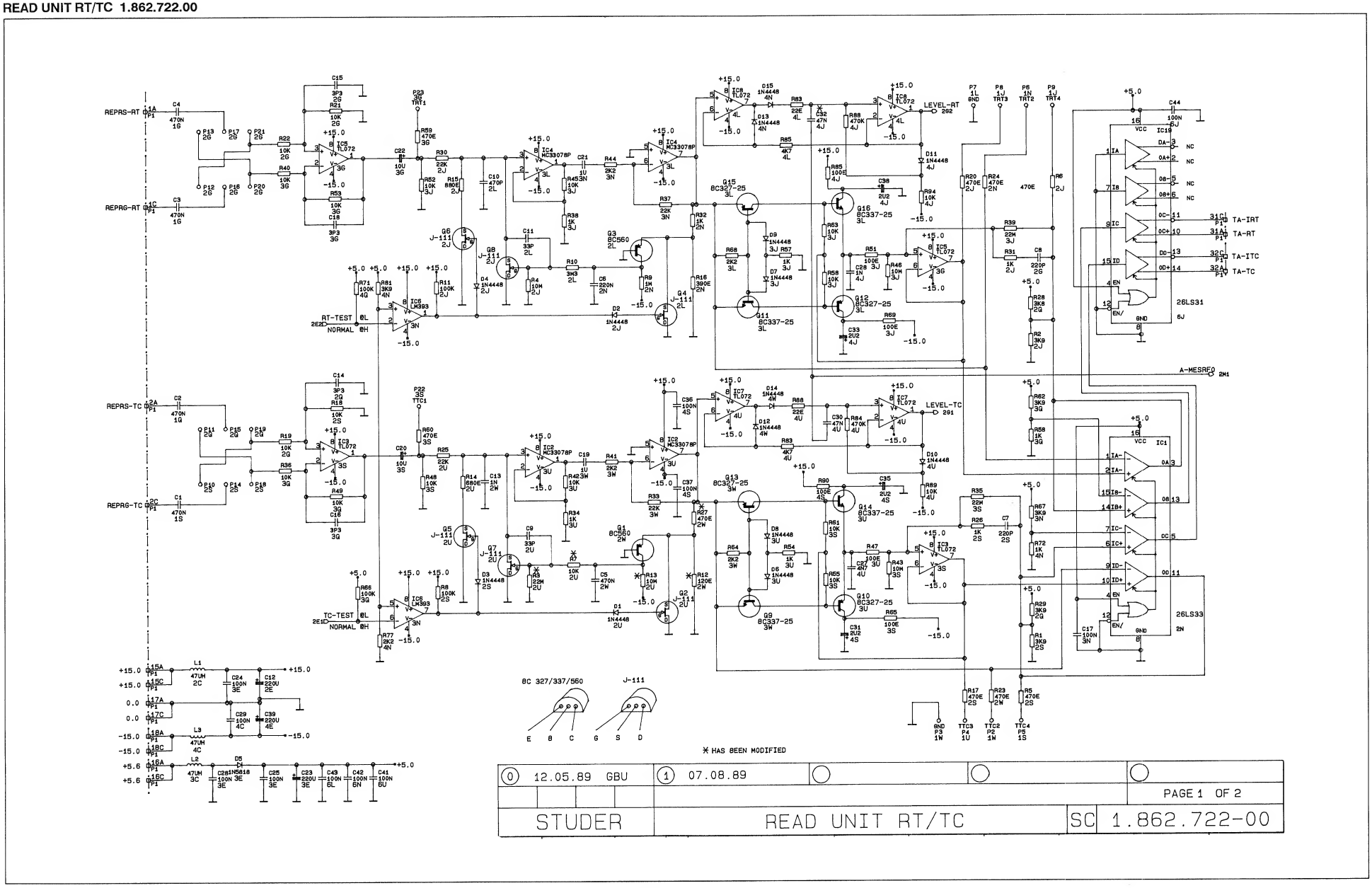

0 12.05.89 GBU	1 07.08.89			PAGE 1 OF 2
STUDER	READ UNIT RT/TC		SC	1.862.722-00

READ UNIT RT/TC 1.862.722.00

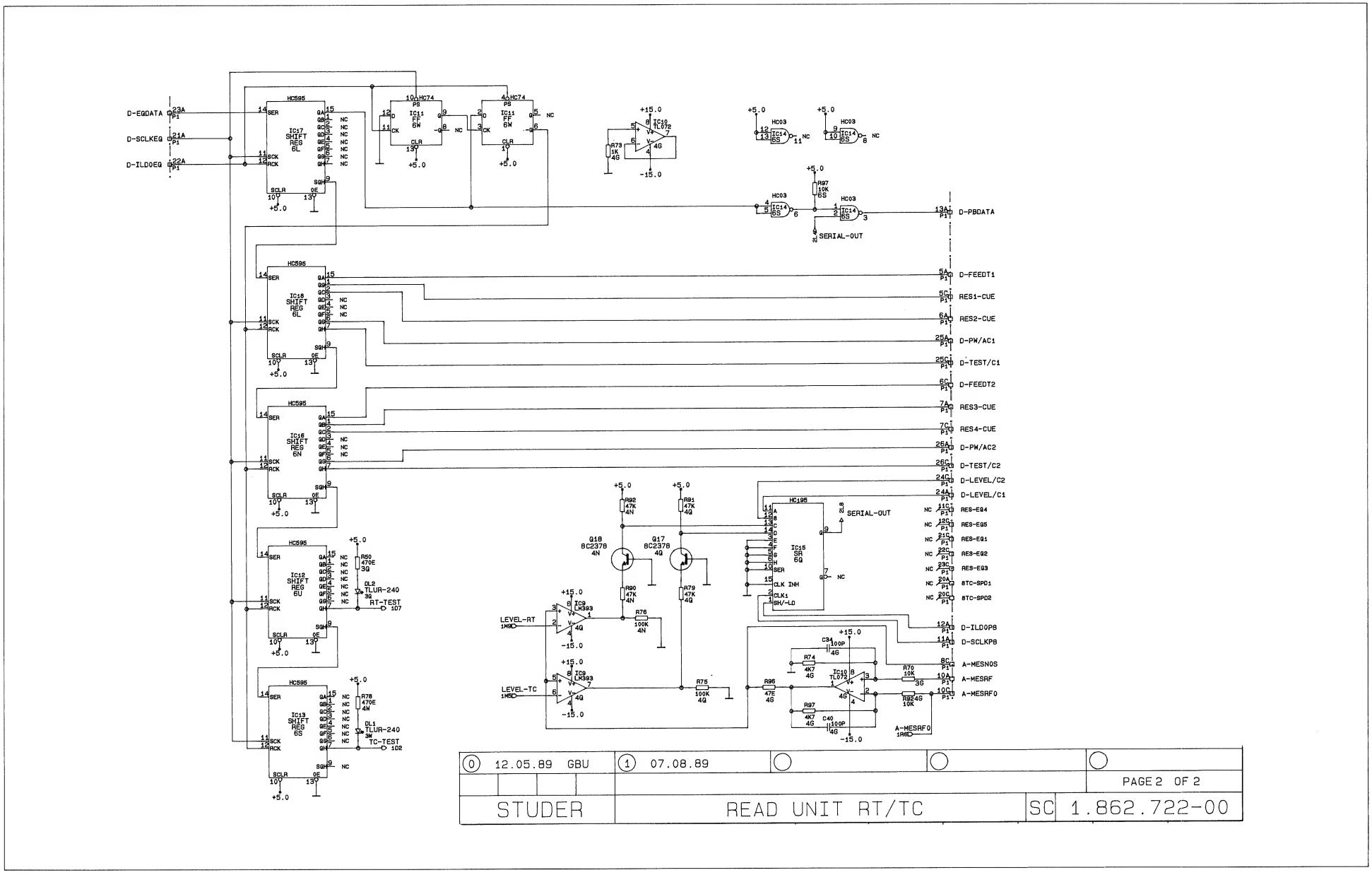

READ UNIT RT/TC 1.862.722.00

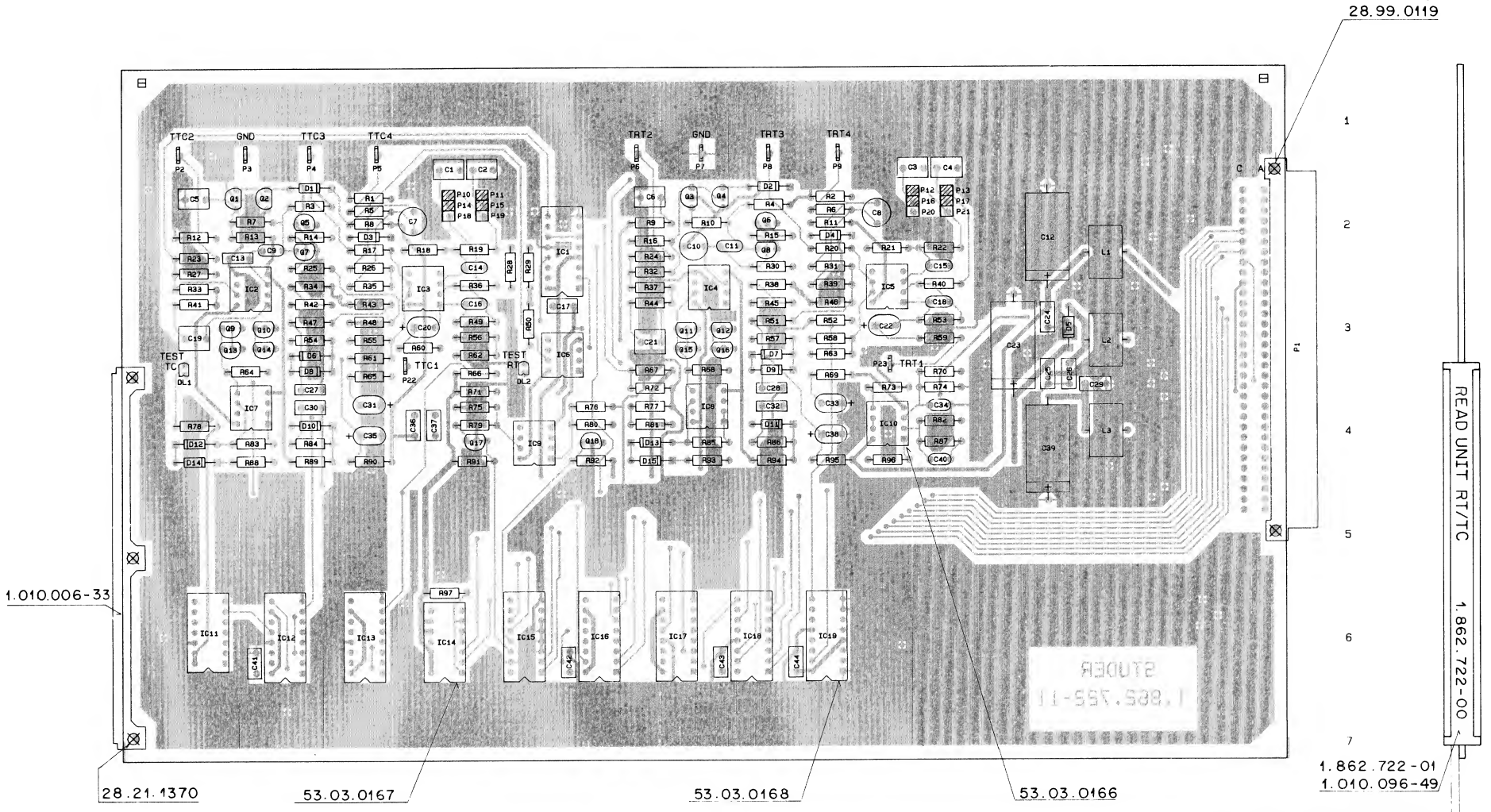

SCHILD 43.01.0108 AUFGEKLEBT
NACH FABRIKATIONSMUSTER

READ UNIT RT/TC 1.862.722.00

IND.	POS.NO.	PART NO.	VALUE	SPECIFICATIONS / EQUIVALENT	MANUF.
	C....1	59.06.0474	470 nF	10%, 63V, PETP	
	C....2	59.06.0474	470 nF	10%, 63V, PETP	
	C....3	59.06.0474	470 nF	10%, 63V, PETP	
	C....4	59.06.0474	470 nF	10%, 63V, PETP	
	C....5	59.06.0474	470 nF	10%, 63V, PETP	
	C....6	59.06.0224	220 nF	10%, 63V, PETP	
	C....7	59.34.4221	220 pF	10%, 63V, Cer	
	C....8	59.34.4221	220 pF	10%, 63V, Cer	
	C....9	59.34.2330	33 pF	5%, 63V, Cer	
	C....10	59.05.1471	470 pF	5%, 63V, FE	
	C....11	59.34.2330	33 pF	5%, 63V, Cer	
	C....12	59.25.4221	220 uF	20%, 25V, El	
	C....13	59.06.5102	1 nF	5%, 63V, PETP	
	C....14	59.34.0339	3.3 pF	5%, 63V, Cer	
	C....15	59.34.0339	3.3 pF	5%, 63V, Cer	
	C....16	59.34.0339	3.3 pF	5%, 63V, Cer	
	C....17	59.06.0104	100 nF	10%, 63V, PETP	
	C....18	59.34.0339	3.3 pF	5%, 63V, Cer	
	C....19	59.06.0105	1 uF	10%, 50V, PETP	
	C....20	59.26.2100	10 uF	20%, 16V, Sal	
	C....21	59.06.0105	1 uF	10%, 50V, PETP	
	C....22	59.26.2100	10 uF	20%, 16V, Sal	
	C....23	59.25.4221	220 uF	20%, 25V, El	
	C....24	59.06.0104	100 nF	10%, 63V, PETP	
	C....25	59.06.0104	100 nF	10%, 63V, PETP	
	C....26	59.06.0104	100 nF	10%, 63V, PETP	
	C....27	59.06.0472	4.7 nF	10%, 63V, PETP	
	C....28	59.06.0102	1 nF	10%, 63V, PETP	
	C....29	59.06.0104	100 nF	10%, 63V, PETP	
	C....30	59.06.5473	47 nF	10%, 63V, PETP	
	C....31	59.26.5229	2.2 uF	20%, 25V, Sal	
	C....32	59.06.5473	47 nF	10%, 63V, PETP	
	C....33	59.26.5229	2.2 uF	20%, 25V, Sal	
	C....34	59.34.4101	100 pF	5%, 63V, Cer	
	C....35	59.26.5229	2.2 uF	20%, 25V, Sal	
	C....36	59.06.0104	100 nF	10%, 63V, PETP	
	C....37	59.06.0104	100 nF	10%, 63V, PETP	

IND.	POS.NO.	PART NO.	VALUE	SPECIFICATIONS / EQUIVALENT	MANUF.
	C....38	59.26.5229	2.2 uF	20%, 25V, Sal	
	C....39	59.25.4221	220 uF	20%, 25V, El	
	C....40	59.34.4101	100 pF	5%, 63V, Cer	
	C....41	59.06.0104	100 nF	10%, 63V, PETP	
	C....42	59.06.0104	100 nF	10%, 63V, PETP	
	C....43	59.06.0104	100 nF	10%, 63V, PETP	
	C....44	59.06.0104	100 nF	10%, 63V, PETP	
	D....1	50.04.0125	1N4448		Fc,ITT,Ph,SES,Tf
	D....2	50.04.0125	1N4448		Fc,ITT,Ph,SES,Tf
	D....3	50.04.0125	1N4448		Fc,ITT,Ph,SES,Tf
	D....4	50.04.0125	1N4448		Fc,ITT,Ph,SES,Tf
	D....5	50.04.0512	1N5818 RL	1N5819 RL	Mot
	D....6	50.04.0125	1N4448		Fc,ITT,Ph,SES,Tf
	D....7	50.04.0125	1N4448		Fc,ITT,Ph,SES,Tf
	D....8	50.04.0125	1N4448		Fc,ITT,Ph,SES,Tf
	D....9	50.04.0125	1N4448		Fc,ITT,Ph,SES,Tf
	D....10	50.04.0125	1N4448		Fc,ITT,Ph,SES,Tf
	D....11	50.04.0125	1N4448		Fc,ITT,Ph,SES,Tf
	D....12	50.04.0125	1N4448		Fc,ITT,Ph,SES,Tf
	D....13	50.04.0125	1N4448		Fc,ITT,Ph,SES,Tf
	D....14	50.04.0125	1N4448		Fc,ITT,Ph,SES,Tf
	D....15	50.04.0125	1N4448		Fc,ITT,Ph,SES,Tf
	DL....1	50.04.2121	TLUR 2401	LED, red	Tf
	DL....2	50.04.2121	TLUR 2401	LED, red	Tf
	IC....1	50.15.0109	AM26LS33CN	DS 26 LS 33 PC	AMD,NS
	IC....2	50.09.0117	MC 33078P		Mot
	IC....3	50.09.0101	TL 072 CP	TDB 0353 DP	Mot,TI,SGS,Tho
	IC....4	50.09.0117	MC 33078P		Mot
	IC....5	50.09.0101	TL 072 CP	TDB 0353 DP	Mot,TI,SGS,Tho
	IC....6	50.05.0283	LM 393 N	LM 393 P, LM 393 DP	TI,NS,Tho
	IC....7	50.09.0101	TL 072 CP	TDB 0353 DP	Mot,TI,SGS,Tho
	IC....8	50.09.0101	TL 072 CP	TDB 0353 DP	Mot,TI,SGS,Tho
	IC....9	50.05.0283	LM 393 N	LM 393 P, LM 393 DP	TI,NS,Tho
	IC....10	50.09.0101	TL 072 CP	TDB 0353 DP	Mot,TI,SGS,Tho

IND.	POS.NO.	PART NO.	VALUE	SPECIFICATIONS / EQUIVALENT	MANUF.
	IC...11	50.17.1074	CD74HC 74E	.. 74 HC 74 ..	Mot,NS,Ph,RCA,SGS,Tho,TI
	IC...12	50.17.1595	74 HC 595	.. 74 HC 595	NS,SGS,Tho,TI
	IC...13	50.17.1595	74 HC 595	.. 74 HC 595	NS,SGS,Tho,TI
	IC...14	50.17.1003	MC74HC 03N	.. 47 HC 03	Mot,NS,TI
	IC...15	50.17.1165	CD74HC165E	.. 74 HC 165	NS,Ph,RCA,TI
	IC...16	50.17.1595	74 HC 595	.. 74 HC 595	NS,SGS,Tho,TI
	IC...17	50.17.1595	74 HC 595	.. 74 HC 595	NS,SGS,Tho,TI
	IC...18	50.17.1595	74 HC 595	.. 74 HC 595	NS,SGS,Tho,TI
	IC...19	50.15.0108	AM26LS31CN	AM 26 LS 31 PC	AMD,Mot,TI
	L....1	62.03.0010	48 uH	2 A, Tokin nr. SN - S - 400	
	L....2	62.03.0010	48 uH	2 A, Tokin nr. SN - S - 400	
	L....3	62.03.0010	48 uH	2 A, Tokin nr. SN - S - 400	
	P....2	54.02.0320	Testpoint		
	P....3	54.02.0320	Testpoint		
	P....4	54.02.0320	Testpoint		
	P....5	54.02.0320	Testpoint		
	P....6	54.02.0320	Testpoint		
	P....7	54.02.0320	Testpoint		
	P....8	54.02.0320	Testpoint		
	P....9	54.02.0320	Testpoint		
	P....10		see note 1		
	P....11		see note 1		
	P....12		see note 1		
	P....13		see note 1		
	P....14		see note 1		
	P....15		see note 1		
	P....16		see note 1		
	P....17		see note 1		
	P....18		see note 1		
	P....19		see note 1		
	P....20		see note 1		
	P....21		see note 1		
	P....22	54.02.0320	Testpoint		
	P....23	54.02.0320	Testpoint		

IND.	POS.NO.	PART NO.	VALUE	SPECIFICATIONS / EQUIVALENT	MANUF.
	Q....1	50.03.0496	BC 560 E		Sie
	Q....2	50.03.0216	J 111		Mot,NS,Six,Ie
	Q....3	50.03.0496	BC 560 E		Sie
	Q....4	50.03.0216	J 111		Mot,NS,Six,Ie
	Q....5	50.03.0216	J 111		Mot,NS,Six,Ie
	Q....6	50.03.0216	J 111		Mot,NS,Six,Ie
	Q....7	50.03.0216	J 111		Mot,NS,Six,Ie
	Q....8	50.03.0216	J 111		Mot,NS,Six,Ie
	Q....9	50.03.0340	BC 337-25		ITT,Ph,Mot
	Q....10	50.03.0351	BC 327-25		ITT,Ph,Sie
	Q....11	50.03.0340	BC 337-25		ITT,Ph,Mot
	Q....12	50.03.0351	BC 327-25		ITT,Ph,Sie
	Q....13	50.03.0351	BC 327-25		ITT,Ph,Sie
	Q....14	50.03.0340	BC 337-25		ITT,Ph,Mot
	Q....15	50.03.0351	BC 327-25		ITT,Ph,Sie
	Q....16	50.03.0340	BC 337-25		ITT,Ph,Mot
	Q....17	50.03.0436	BC 237 B	BC 547 B, BC 550 B	ITT,Mot,Ph,Sie
	Q....18	50.03.0436	BC 237 B	BC 547 B, BC 550 B	ITT,Mot,Ph,Sie
	R....1	57.11.3392	3.9 kOhm	5%	
	R....2	57.11.3392	3.9 kOhm	5%	
	R....3	57.11.6226	22 MOhm	10%	
	R....4	57.11.5106	10 MOhm	5%	
	R....5	57.11.3471	470 Ohm	5%	
	R....6	57.11.3471	470 Ohm	5%	
	R....7	57.11.3103	10 kOhm	10%	
	R....8	57.11.3104	100 kOhm	10%	
	R....9	57.11.3105	1 MOhm	5%	
	R....10	57.11.5335	3.3 MOhm	5%	
	R....11	57.11.3104	100 kOhm	10%	
(00)	R....12	57.11.3122	1.2 kOhm	1%	
(01)	R....12	57.11.3121	120 Ohm	2%	
	R....13	57.11.5106	10 MOhm	10%	
	R....14	57.11.3681	680 Ohm	1%	
	R....15	57.11.3681	680 Ohm	1%	
	R....16	57.11.3391	390 Ohm	1%	
	R....17	57.11.3471	470 Ohm	5%	

IND.	POS.NO.	PART NO.	VALUE	SPECIFICATIONS / EQUIVALENT	MANUF.
	R....18	57.11.3103	10 kOhm	1%	
	R....19	57.11.3103	10 kOhm	1%	
	R....20	57.11.3471	470 Ohm	5%	
	R....21	57.11.3103	10 kOhm	1%	
	R....22	57.11.3103	10 kOhm	1%	
	R....23	57.11.3471	470 Ohm	5%	
	R....24	57.11.3471	470 Ohm	5%	
	R....25	57.11.3223	22 kOhm	5%	
	R....26	57.11.3102	1 kOhm	5%	
	R....27	57.11.3471	470 Ohm	1%	
	R....28		not used		
	R....29		not used		
	R....30	57.11.3223	22 kOhm	5%	
	R....31	57.11.3102	1 kOhm	5%	
	R....32	57.11.3102	1 kOhm	2%	
	R....33	57.11.3223	22 kOhm	2%	
	R....34	57.11.3102	1 kOhm	2%	
	R....35	57.11.6226	22 MOhm	10%	
	R....36	57.11.3103	10 kOhm	1%	
	R....37	57.11.3223	22 kOhm	2%	
	R....38	57.11.3102	1 kOhm	2%	
	R....39	57.11.6226	22 MOhm	10%	
	R....40	57.11.3103	10 kOhm	1%	
	R....41	57.11.3222	2.2 kOhm	2%	
	R....42	57.11.3103	10 kOhm	1%	
	R....43	57.11.5106	10 MOhm	10%	
	R....44	57.11.3222	2.2 kOhm	2%	
	R....45	57.11.3103	10 kOhm	2%	
	R....46	57.11.5106	10 MOhm	10%	
(00)	R....47	57.11.3111	100 Ohm	5%	
(01)	R....47	57.11.3101	100 Ohm	5%	
	R....48	57.11.3103	10 kOhm	10%	
	R....49	57.11.3103	10 kOhm	1%	
	R....50	57.11.3471	470 Ohm	5%	
(00)	R....51	57.11.3111	100 Ohm	5%	
(01)	R....51	57.11.3101	100 Ohm	5%	
	R....52	57.11.3103	10 kOhm	10%	

IND.	POS.NO.	PART NO.	VALUE	SPECIFICATIONS / EQUIVALENT	MANUF.
	R....53	57.11.3103	10 kOhm	1%	
	R....54	57.11.3102	1 kOhm	5%	
	R....55	57.11.3103	10 kOhm	5%	
	R....56	57.11.3102	1 kOhm	2%	
	R....57	57.11.3102	1 kOhm	5%	
	R....58	57.11.3103	10 kOhm	5%	
	R....59	57.11.3471	470 Ohm	5%	
	R....60	57.11.3471	470 Ohm	5%	
	R....61	57.11.3103	10 kOhm	5%	
	R....62	57.11.3392	3.9 kOhm	2%	
	R....63	57.11.3103	10 kOhm	5%	
	R....64	57.11.3222	2.2 kOhm	5%	
	R....65	57.11.3101	100 Ohm	5%	
	R....66	57.11.3104	100 kOhm	10%	
	R....67	57.11.3392	3.9 kOhm	2%	
	R....68	57.11.3222	2.2 kOhm	5%	
	R....69	57.11.3101	100 Ohm	5%	
	R....70	57.11.3103	10 kOhm	1%	
	R....71	57.11.3104	100 kOhm	10%	
	R....72	57.11.3102	1 kOhm	2%	
	R....73	57.11.3102	1 kOhm	10%	
	R....74	57.11.3472	4.7 kOhm	1%	
	R....75	57.11.3104	100 kOhm	5%	
	R....76	57.11.3104	100 kOhm	5%	
	R....77	57.11.3222	2.2 kOhm	2%	
	R....78	57.11.3471	470 Ohm	5%	
	R....79	57.11.3473	47 kOhm	5%	
	R....80	57.11.3473	47 kOhm	5%	
	R....81	57.11.3392	3.9 kOhm	2%	
	R....82	57.11.3103	10 kOhm	1%	
	R....83	57.11.3472	4.7 kOhm	5%	
	R....84	57.11.3474	470 kOhm	5%	
	R....85	57.11.3472	4.7 kOhm	5%	
	R....86	57.11.3474	470 kOhm	5%	
	R....87	57.11.3472	4.7 kOhm	1%	
	R....88	57.11.3220	22 Ohm	5%	
	R....89	57.11.3103	10 kOhm	5%	

IND.	POS.NO.	PART NO.	VALUE	SPECIFICATIONS / EQUIVALENT	MANUF.
	R....90	57.11.3101	100 Ohm	5%	
	R....91	57.11.3473	47 kOhm	5%	
	R....92	57.11.3473	47 kOhm	5%	
	R....93	57.11.3220	22 Ohm	5%	
	R....94	57.11.3103	10 kOhm	5%	
	R....95	57.11.3101	100 Ohm	5%	
	R....96	57.11.3470	47 Ohm	5%	
	R....97	57.11.3103	10 kOhm	10%	

Note 1 - Contact pin: Studer Nr. 54.01.0020
Berg Nr. 75 160-102-36
Philips Nr. 2422 025 89303
Bridge: Studer Nr. 54.01.0021
Berg Nr. 65 474-001
Philips Nr. 2422 024 88003

(01) Decreases of attack time of tine code AGC.

Ce=Ceramic, El=Electrolytic, Sal=Solid aluminium, PETP=Polyesterfilm,
PP=Polypropylen.

MANUFACTURER: AMD=Advanced Micro Devices, Fc=Fairchild, ITT=Intermetall,
Ie=Intersil, Mot=Motorola, NS=National Semiconductors,
Ph=Philips, RCA=Radio Corporation of America, SES=Sescosem,
SGS=SGS/Ates, Sie=Siemens, Six=Siliconix, TF=Telefunken,
Tho=Thomson, TI=Texas Instruments.

ORIG 89/05/12 (01) 89/08/07

BLOCK DIAGRAM READ UNIT CUE TRACKS

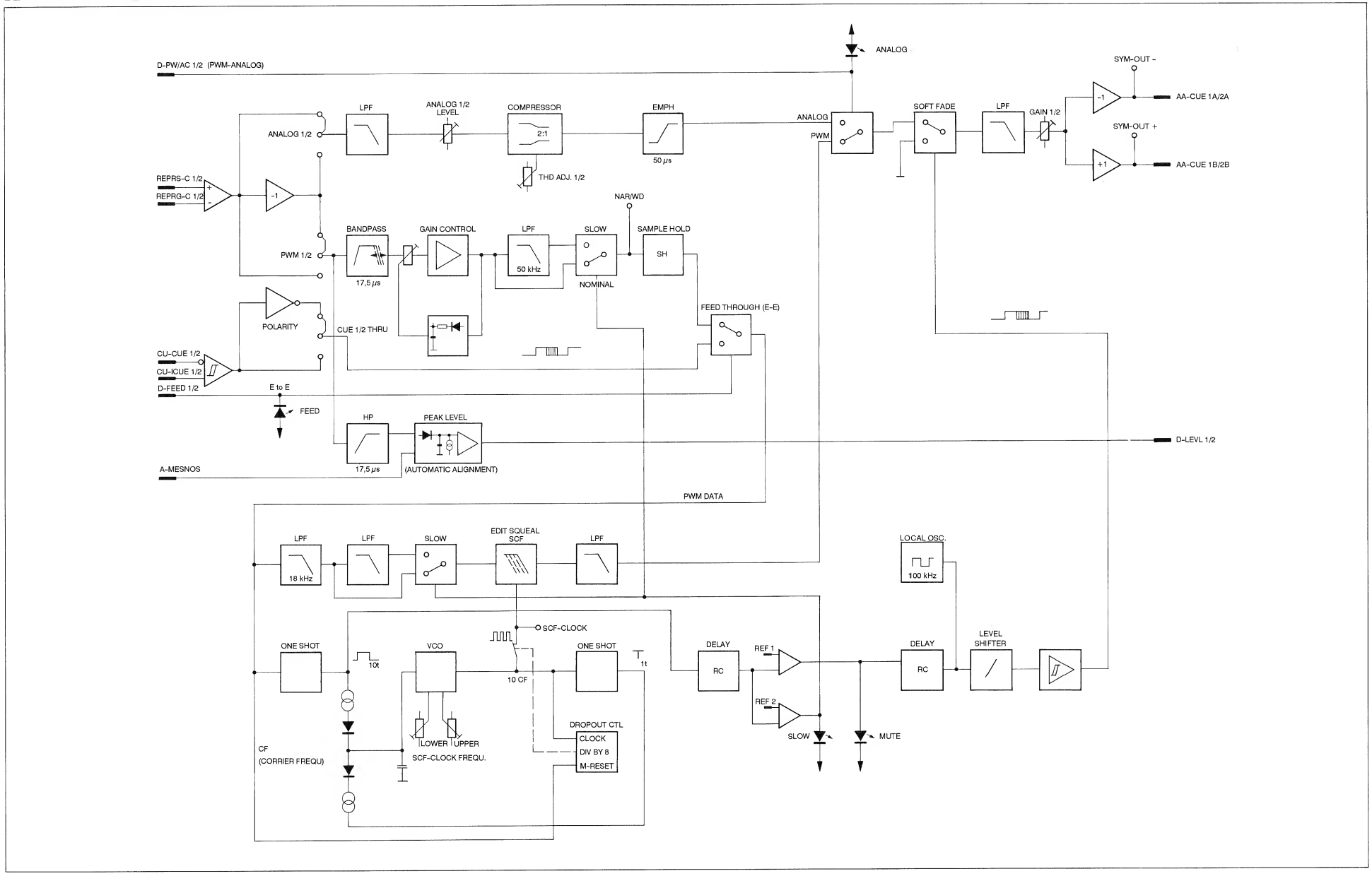

READ UNIT CUE TRACKS 1.862.723.81

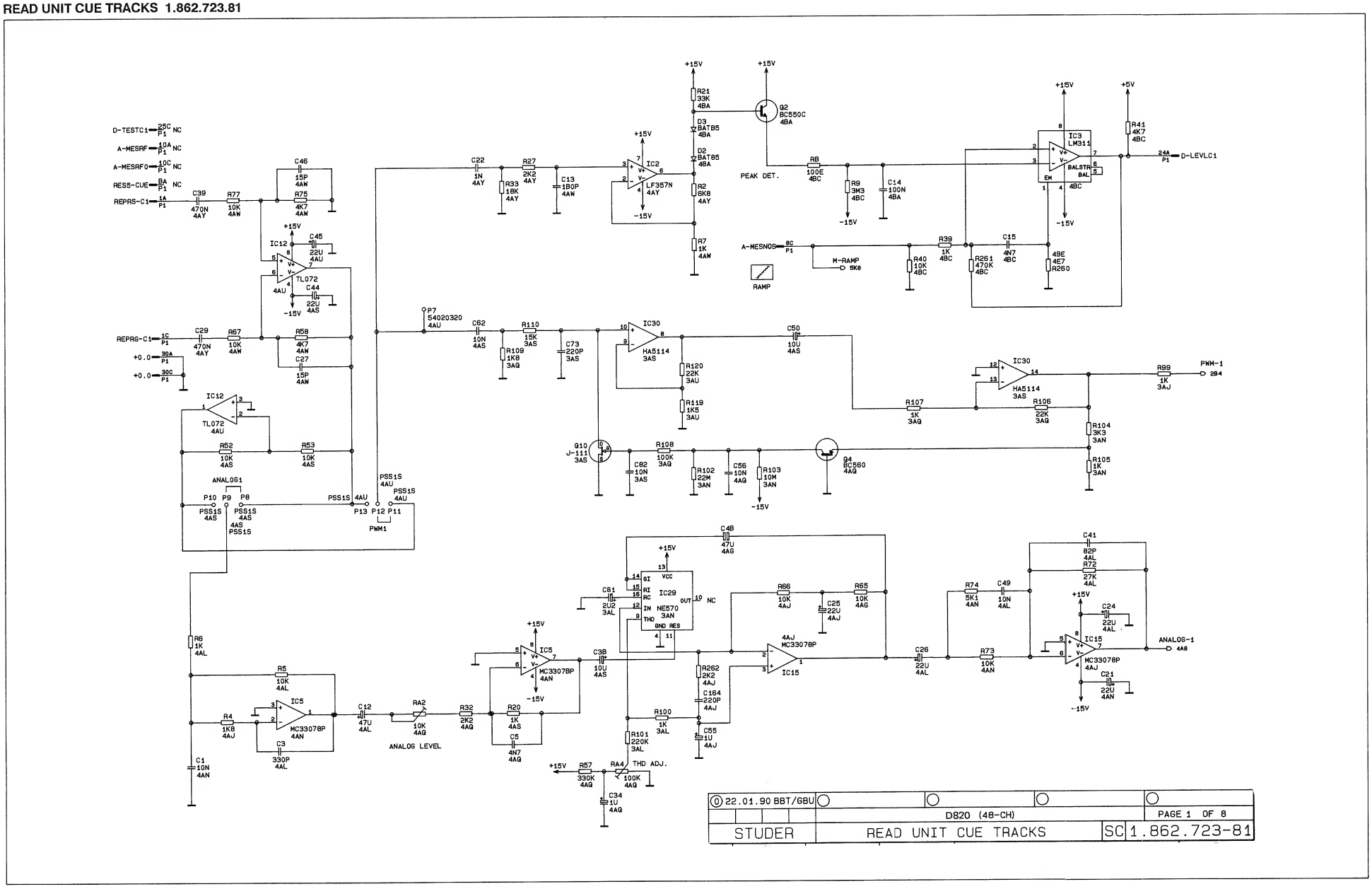

READ UNIT CUE TRACKS 1.862.723.81

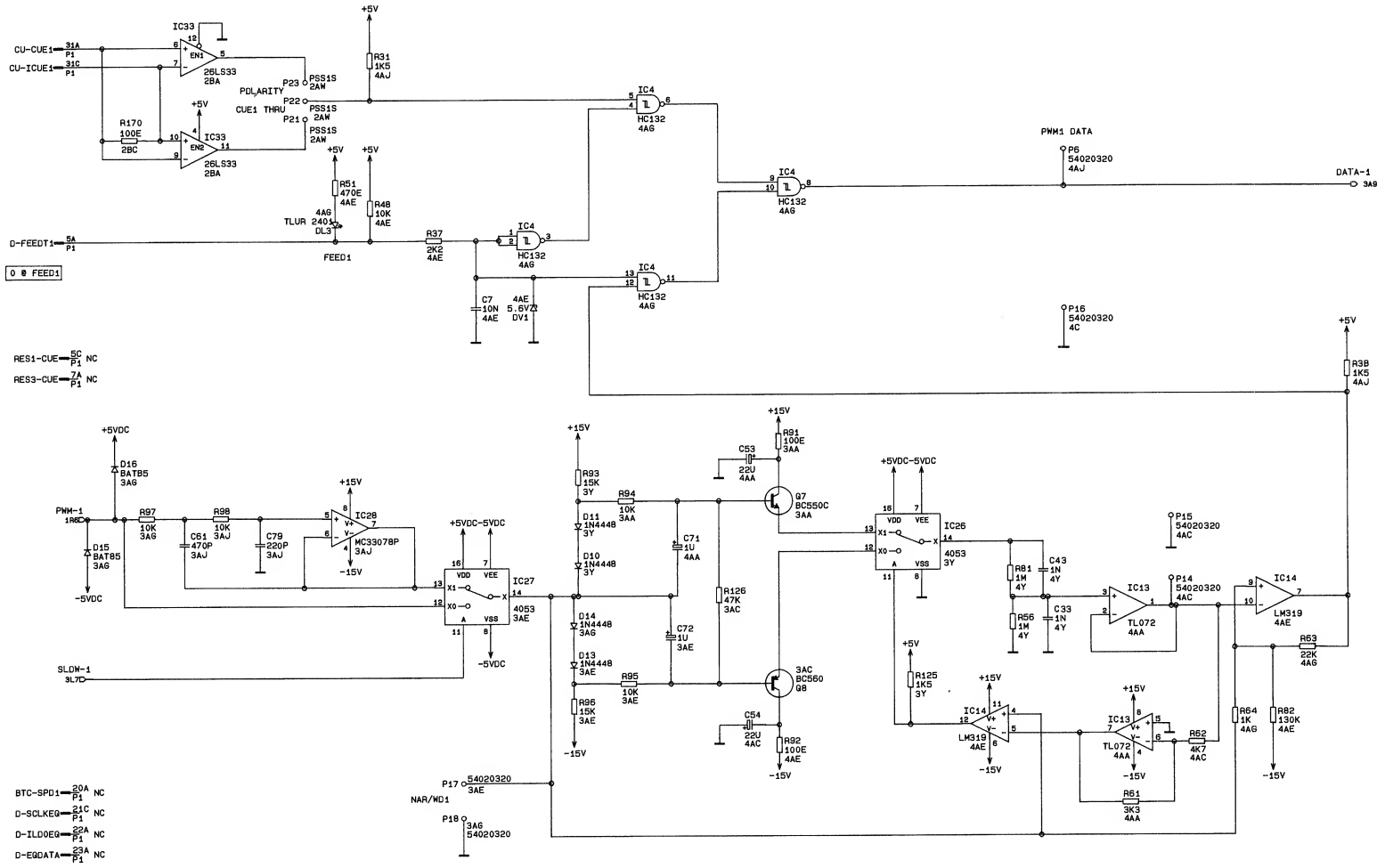

0 22.01.90 BBT/GBU			
	D820 (4B-CH)		PAGE 2 OF 8
STUDER	READ UNIT CUE TRACKS	SC	1.862.723-81

READ UNIT CUE TRACKS 1.862.723.81

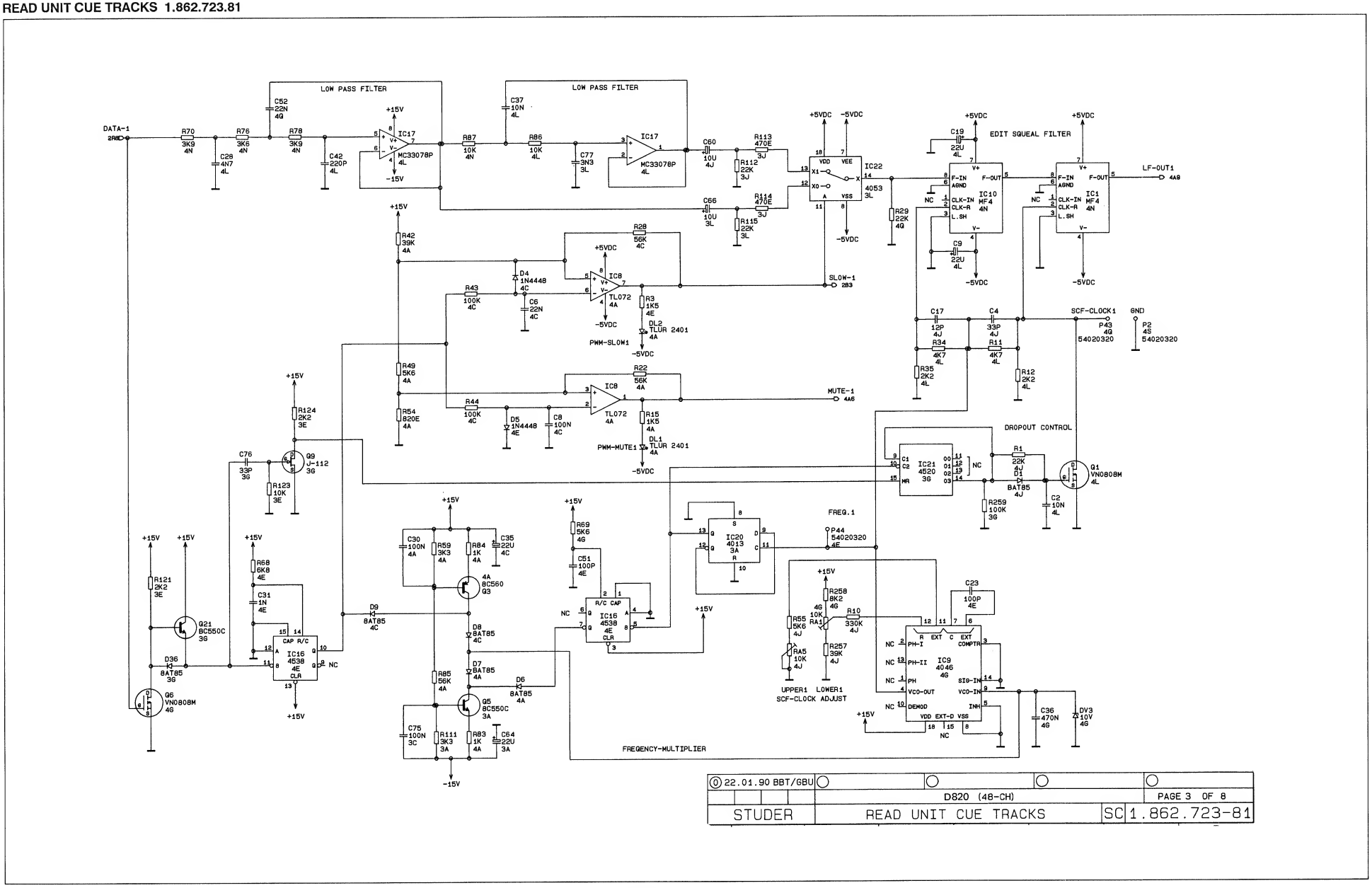

READ UNIT CUE TRACKS 1.862.723.81

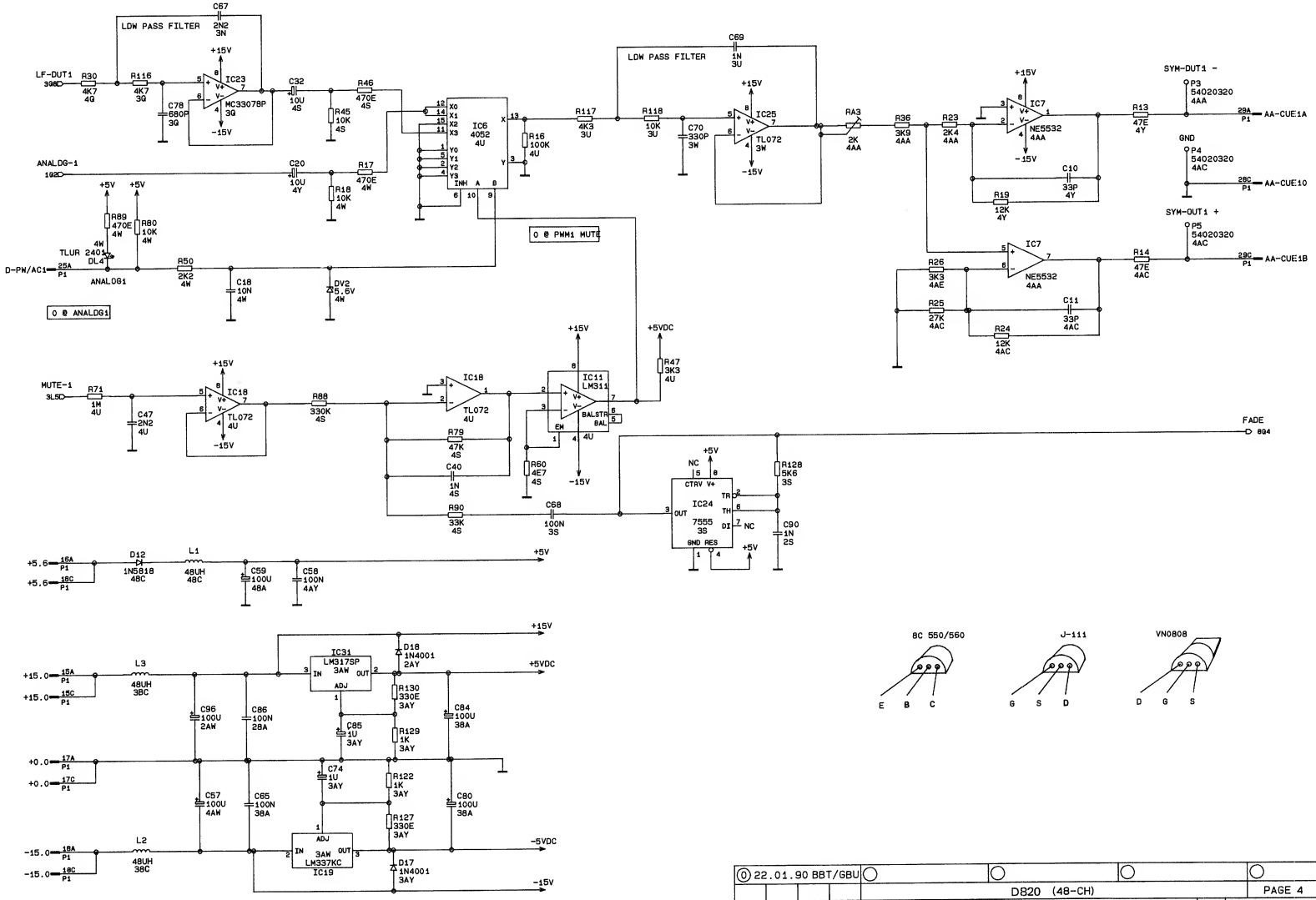

0 22.01.90 BBT/GBU				
	D820 (48-CH)			PAGE 4 OF 8
STUDER	READ UNIT CUE TRACKS	SC	1.862.723-81	

READ UNIT CUE TRACKS 1.862.723.81

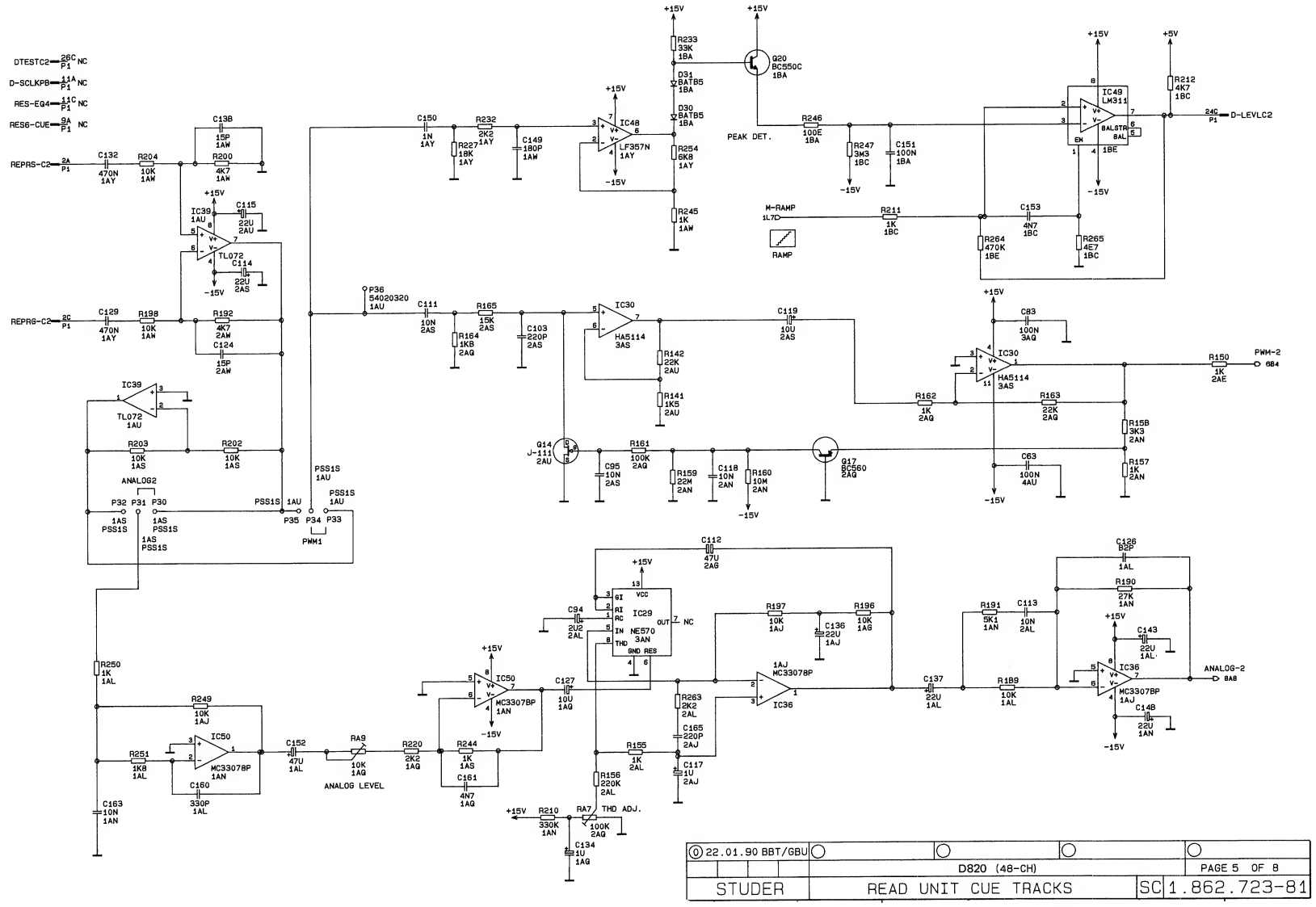

22.01.90 BBT/GBU			
	D820 (48-CH)		PAGE 5 OF 8
STUDER	READ UNIT CUE TRACKS	SC	1.862.723-81

READ UNIT CUE TRACKS 1.862.723.81

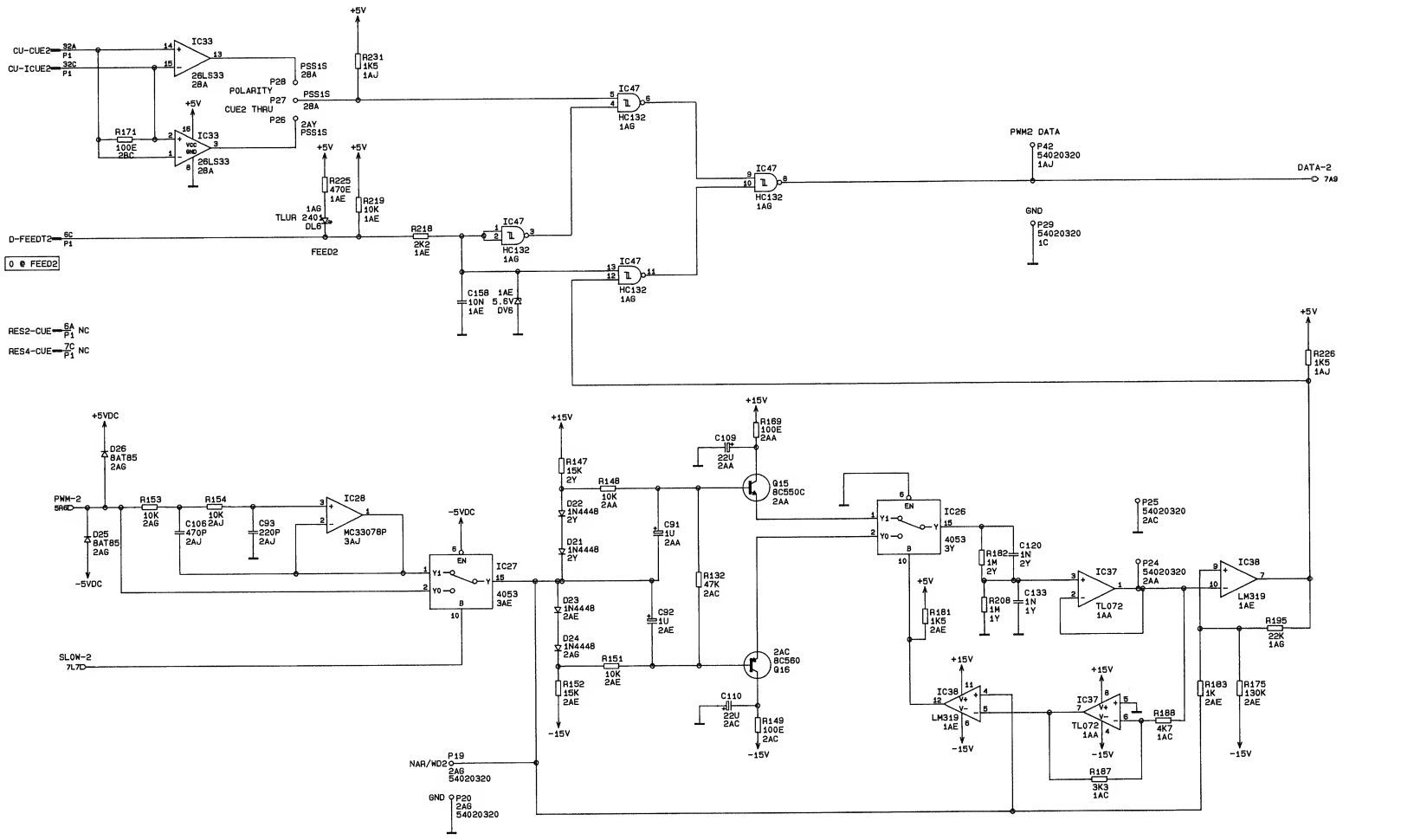

0 22.01.90 BBT/GBU			
	D820 (48-CH)		PAGE 6 OF 8
STUDER	READ UNIT CUE TRACKS	SC	1.862.723-81

READ UNIT CUE TRACKS 1.862.723.81

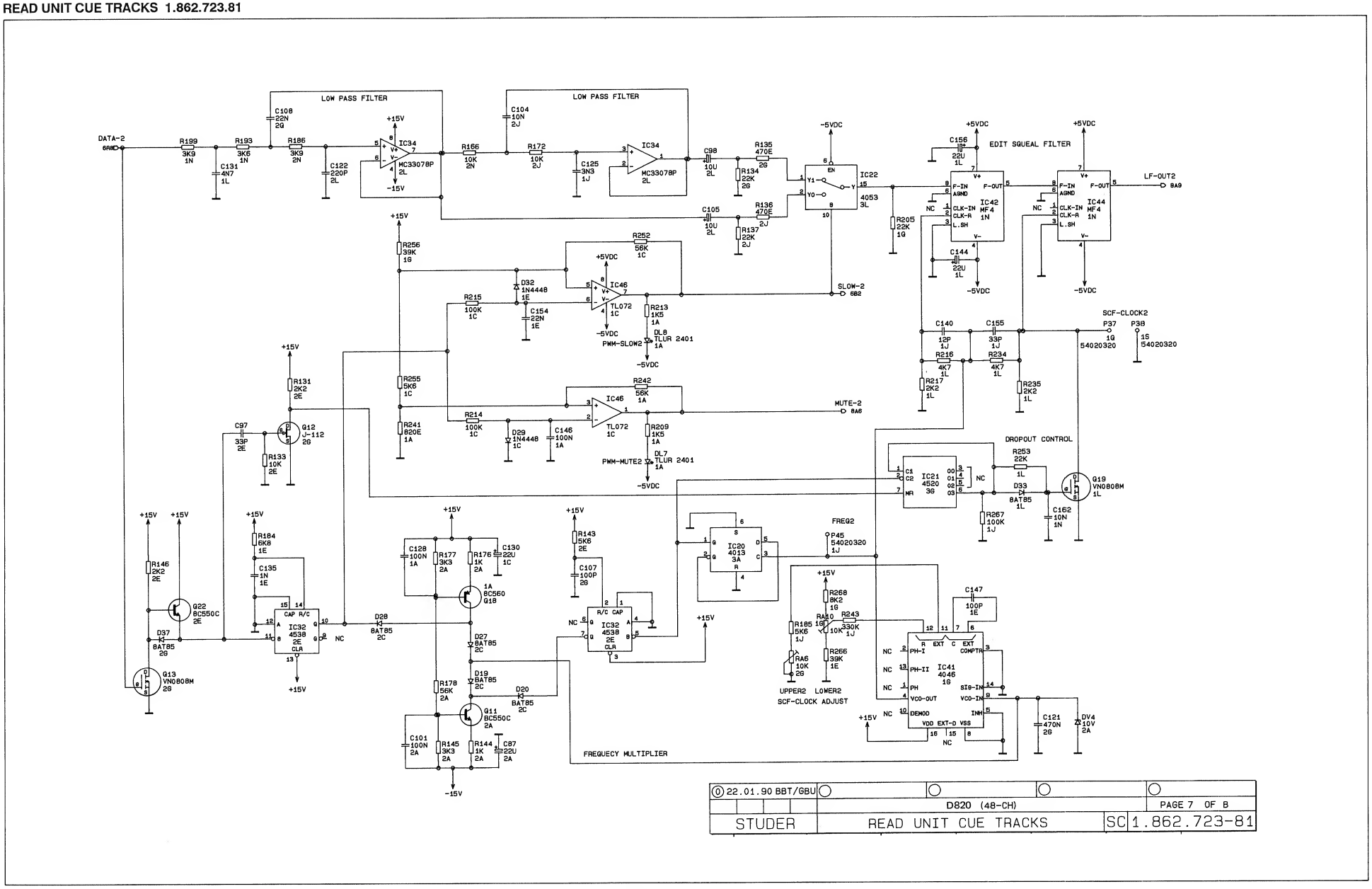

READ UNIT CUE TRACKS 1.862.723.81

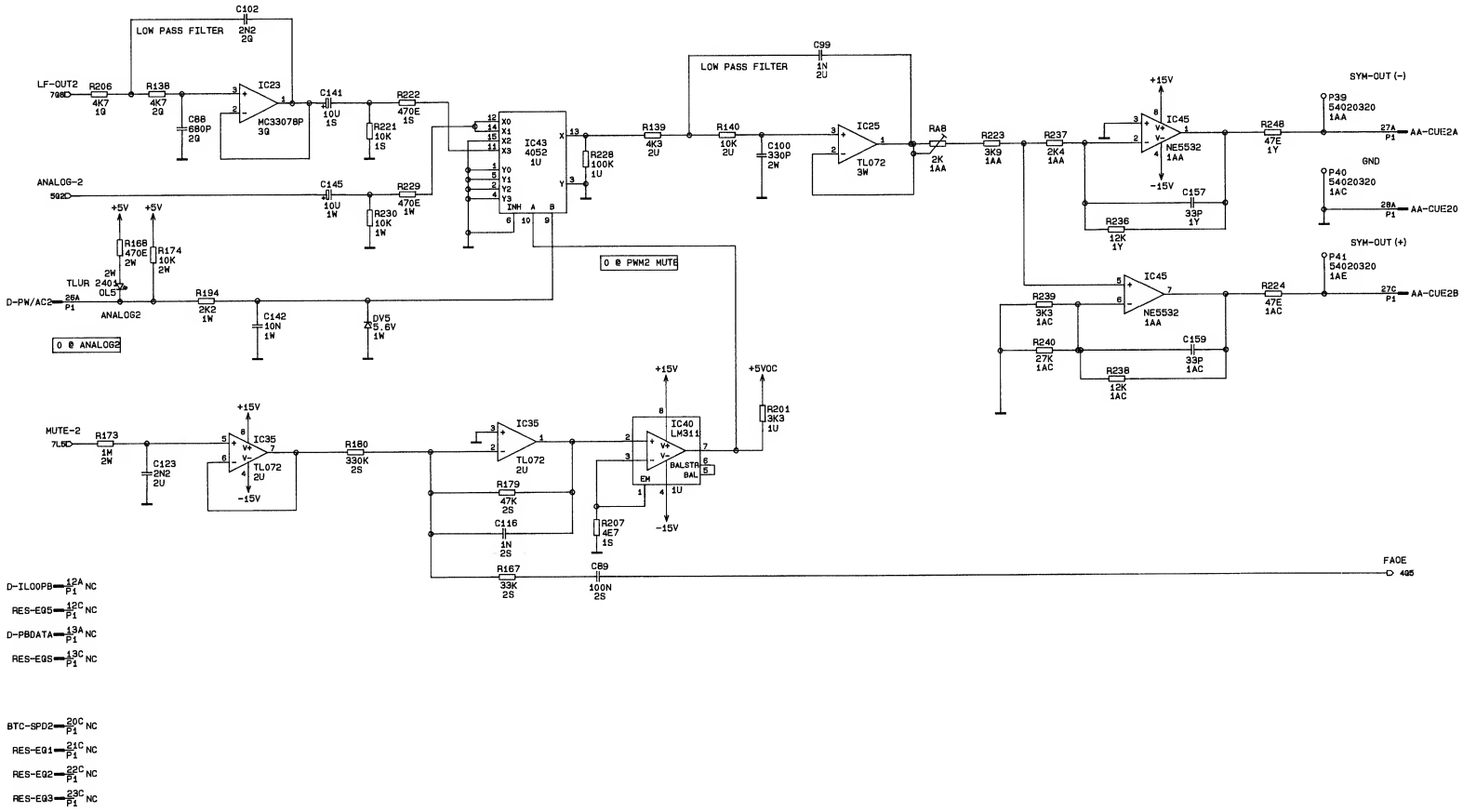

0 22.01.90 BBT/GBU			
	D820 (48-CH)		PAGE 8 OF 8
STUDER	READ UNIT CUE TRACKS	SC	1.862.723-81

READ UNIT CUE TRACKS 1.862.723.81

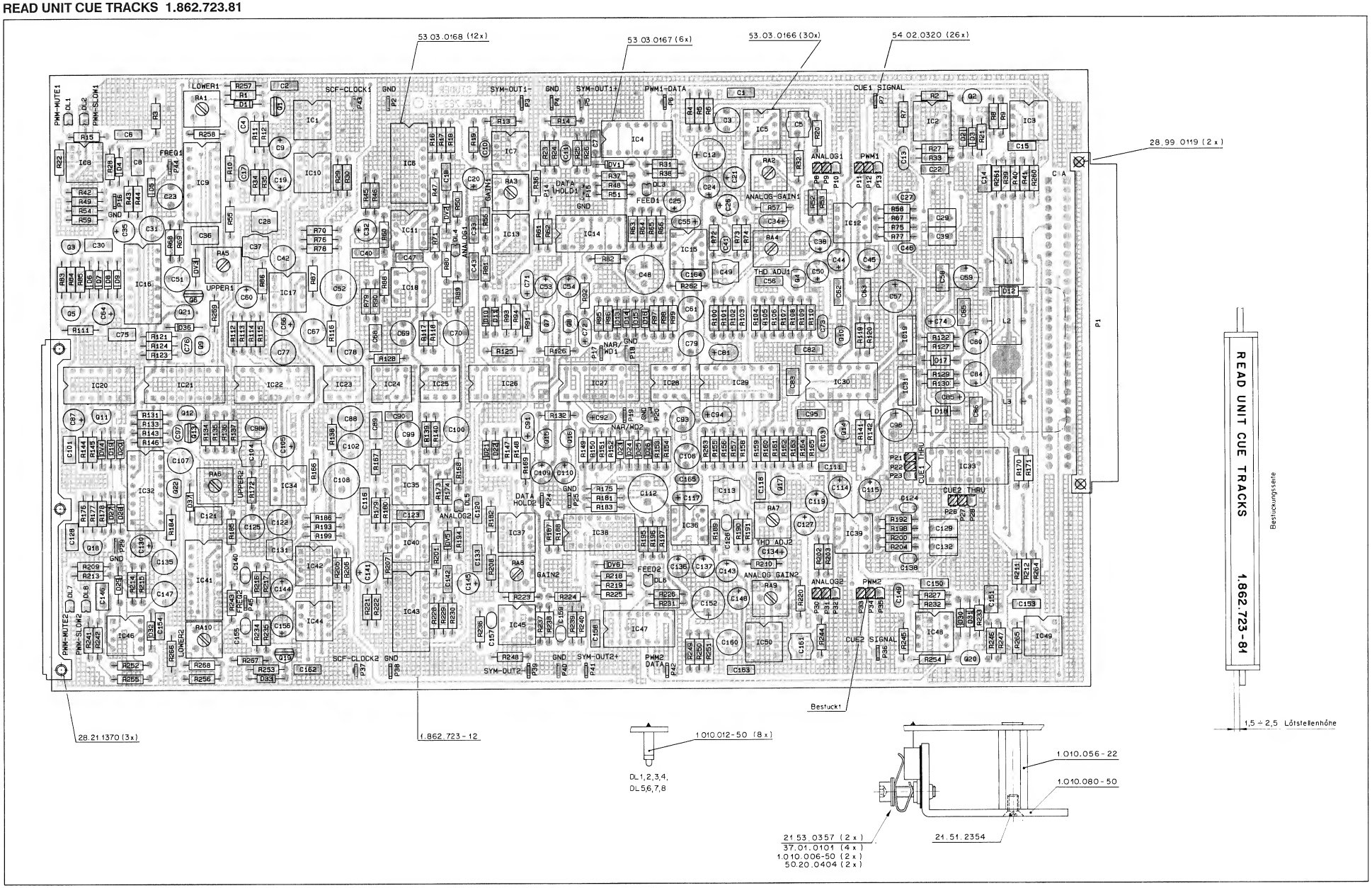

READ UNIT CUE TRACKS 1.862.723.81

IND.	POS.NO.	PART NO.	VALUE	SPECIFICATIONS / EQUIVALENT	MANUF.
	C.....1	59.06.5103	10 nF	5%, 63V, PETP	
	C.....2	59.06.0103	10 nF	10%, 63V, PETP	
	C.....3	59.05.1331	330 pF	1%, 63V, PETP	
	C.....4	59.34.2330	33 pF	5%, 63V, Cer	
	C.....5	59.05.1472	4.7 nF	1%, 63V, PETP	
	C.....6	59.06.0223	22 nF	10%, 63V, PETP	
	C.....7	59.06.5103	10 nF	5%, 63V, PETP	
	C.....8	59.06.0104	100 nF	10%, 63V, PETP	
	C.....9	59.22.5220	22 uF	20%, 25V, El	
	C....10	59.34.2330	33 pF	5%, 63V, Cer	
	C....11	59.34.2330	33 pF	5%, 63V, Cer	
	C....12	59.22.5470	47 uF	20%, 25V, El	
	C....13	59.34.4181	180 pF	5%, 63V, Cer	
	C....14	59.06.0104	100 nF	10%, 63V, PETP	
	C....15	59.06.5472	4.7 nF	5%, 63V, PETP	
	C....16		not used		
	C....17	59.34.1120	12 pF	5%, 63V, Cer	
	C....18	59.06.5103	10 nF	5%, 63V, PETP	
	C....19	59.22.5220	22 uF	20%, 25V, El	
	C....20	59.22.6100	10 uF	20%, 35V, El	
	C....21	59.22.5220	22 uF	20%, 25V, El	
	C....22	59.06.5102	1 nF	5%, 63V, PETP	
	C....23	59.05.1101	100 pF	1%, 63V, PETP	
	C....24	59.22.5220	22 uF	20%, 25V, El	
	C....25	59.22.5220	22 uF	20%, 25V, El	
	C....26	59.22.5220	22 uF	20%, 25V, El	
	C....27	59.34.1150	15 pF	5%, 63V, Cer	
	C....28	59.05.1472	4.7 nF	1%, 63V, PETP	
	C....29	59.06.0474	470 nF	10%, 63V, PETP	
	C....30	59.06.0104	100 nF	10%, 63V, PETP	
	C....31	59.05.1102	1 nF	1%, 63V, PETP	
	C....32	59.22.6100	10 uF	20%, 35V, El	
	C....33	59.06.5102	1 nF	5%, 63V, PETP	
	C....34	59.26.5109	1 uF	20%, 16V, Sal	
	C....35	59.22.5220	22 uF	20%, 25V, El	
	C....36	59.06.0474	470 nF	10%, 63V, PETP	
	C....37	59.05.1103	10 nF	1%, 63V, PETP	

STUDER (00) 90/01/22 BBT READ UNIT CUE TRACKS PL 1.862.723.81 PAGE 1

IND.	POS.NO.	PART NO.	VALUE	SPECIFICATIONS / EQUIVALENT	MANUF.
	C....38	59.22.6100	10 uF	20%, 35V, El	
	C....39	59.06.0474	470 nF	10%, 63V, PETP	
	C....40	59.06.5102	1 nF	5%, 63V, PETP	
	C....41	59.34.4820	82 pF	5%, 63V, Cer	
	C....42	59.05.1221	220 pF	1%, 63V, PETP	
	C....43	59.06.5102	1 nF	5%, 63V, PETP	
	C....44	59.22.5220	22 uF	20%, 25V, El	
	C....45	59.22.5220	22 uF	20%, 25V, El	
	C....46	59.34.1150	15 pF	5%, 63V, Cer	
	C....47	59.06.0222	2.2 nF	10%, 63V, PETP	
	C....48	59.99.0401	47 uF	10%, 16V, ElBip	
	C....49	59.05.1103	10 nF	1%, 63V, PETP	
	C....50	59.22.6100	10 uF	20%, 35V, El	
	C....51	59.05.1101	100 pF	1%, 63V, PETP	
	C....52	59.05.1223	22 nF	1%, 63V, PETP	
	C....53	59.22.5220	22 uF	20%, 25V, El	
	C....54	59.22.5220	22 uF	20%, 25V, El	
	C....55	59.26.5109	1 uF	20%, 16V, Sal	
	C....56	59.06.5103	10 nF	5%, 63V, PETP	
	C....57	59.22.5101	100 uF	20%, 25V, El	
	C....58	59.06.0104	100 nF	10%, 63V, PETP	
	C....59	59.22.3101	100 uF	20%, 10V, El	
	C....60	59.22.6100	10 uF	20%, 35V, El	
	C....61	59.05.1471	470 pF	1%, 63V, PETP	
	C....62	59.06.5103	10 nF	5%, 63V, PETP	
	C....63	59.06.0104	100 nF	10%, 63V, PETP	
	C....64	59.22.5220	22 uF	20%, 25V, El	
	C....65	59.06.0104	100 nF	10%, 63V, PETP	
	C....66	59.22.6100	10 uF	20%, 35V, El	
	C....67	59.05.1222	2.2 nF	1%, 63V, PETP	
	C....68	59.06.0104	100 nF	10%, 63V, PETP	
	C....69	59.05.1102	1 nF	1%, 63V, PETP	
	C....70	59.05.1331	330 pF	1%, 63V, PETP	
	C....71	59.26.5109	1 uF	20%, 16V, Sal	
	C....72	59.26.5109	1 uF	20%, 16V, Sal	
	C....73	59.34.4221	220 pF	10%, 63V, Cer	
	C....74	59.26.5109	1 uF	20%, 16V, Sal	

STUDER (00) 90/01/22 BBT READ UNIT CUE TRACKS PL 1.862.723.81 PAGE 2

IND.	POS.NO.	PART NO.	VALUE	SPECIFICATIONS / EQUIVALENT	MANUF.
	C....75	59.06.0104	100 nF	10%, 63V, PETP	
	C....76	59.34.2330	33 pF	5%, 63V, Cer	
	C....77	59.05.1332	3.3 nF	1%, 63V, PETP	
	C....78	59.05.1681	680 pF	1%, 63V, PETP	
	C....79	59.05.1221	220 pF	1%, 63V, PETP	
	C....80	59.22.3101	100 uF	20%, 10V, El	
	C....81	59.26.5229	2.2 uF	20%, 16V, Sal	
	C....82	59.06.0103	10 nF	10%, 63V, PETP	
	C....83	59.06.0104	100 nF	10%, 63V, PETP	
	C....84	59.22.3101	100 uF	20%, 10V, El	
	C....85	59.26.5109	1 uF	20%, 16V, Sal	
	C....86	59.06.0104	100 nF	10%, 63V, PETP	
	C....87	59.22.5220	22 uF	20%, 25V, El	
	C....88	59.05.1681	680 pF	1%, 63V, PETP	
	C....89	59.06.0104	100 nF	10%, 63V, PETP	
	C....90	59.06.5102	1 nF	5%, 63V, PETP	
	C....91	59.26.5109	1 uF	20%, 16V, Sal	
	C....92	59.26.5109	1 uF	20%, 16V, Sal	
	C....93	59.05.1221	220 pF	1%, 63V, PETP	
	C....94	59.26.5229	2.2 uF	20%, 16V, Sal	
	C....95	59.06.0103	10 nF	10%, 63V, PETP	
	C....96	59.22.5101	100 uF	20%, 25V, El	
	C....97	59.34.2330	33 pF	5%, 63V, Cer	
	C....98	59.22.6100	10 uF	20%, 35V, El	
	C....99	59.05.1102	1 nF	1%, 63V, PETP	
	C...100	59.05.1331	330 pF	1%, 63V, PETP	
	C...101	59.06.0104	100 nF	10%, 63V, PETP	
	C...102	59.05.1222	2.2 nF	1%, 63V, PETP	
	C...103	59.34.4221	220 pF	10%, 63V, Cer	
	C...104	59.05.1103	10 nF	1%, 63V, PETP	
	C...105	59.22.6100	10 uF	20%, 35V, El	
	C...106	59.05.1471	470 pF	1%, 63V, PETP	
	C...107	59.05.1101	100 pF	1%, 63V, PETP	
	C...108	59.05.1223	22 nF	1%, 63V, PETP	
	C...109	59.22.5220	22 uF	20%, 25V, El	
	C...110	59.22.5220	22 uF	20%, 25V, El	
	C...111	59.06.5103	10 nF	5%, 63V, PETP	

STUDER (00) 90/01/22 BBT READ UNIT CUE TRACKS PL 1.862.723.81 PAGE 3

IND.	POS.NO.	PART NO.	VALUE	SPECIFICATIONS / EQUIVALENT	MANUF.
	C...112	59.99.0401	47 uF	10%, 16V, ElBip	
	C...113	59.05.1103	10 nF	1%, 63V, PETP	
	C...114	59.22.5220	22 uF	20%, 25V, El	
	C...115	59.22.5220	22 uF	20%, 25V, El	
	C...116	59.06.5102	1 nF	5%, 63V, PETP	
	C...117	59.26.5109	1 uF	20%, 16V, Sal	
	C...118	59.06.5103	10 nF	5%, 63V, PETP	
	C...119	59.22.6100	10 uF	20%, 35V, El	
	C...120	59.06.5102	1 nF	5%, 63V, PETP	
	C...121	59.06.0474	470 nF	10%, 63V, PETP	
	C...122	59.05.1221	220 pF	1%, 63V, PETP	
	C...123	59.06.0222	2.2 nF	10%, 63V, PETP	
	C...124	59.34.1150	15 pF	5%, 63V, Cer	
	C...125	59.05.1332	3.3 nF	1%, 63V, PETP	
	C...126	59.34.4820	82 pF	5%, 63V, Cer	
	C...127	59.22.6100	10 uF	20%, 35V, El	
	C...128	59.06.0104	100 nF	10%, 63V, PETP	
	C...129	59.06.0474	470 nF	10%, 63V, PETP	
	C...130	59.22.5220	22 uF	20%, 25V, El	
	C...131	59.05.1472	4.7 nF	1%, 63V, PETP	
	C...132	59.06.0474	470 nF	10%, 63V, PETP	
	C...133	59.06.5102	1 nF	5%, 63V, PETP	
	C...134	59.26.5109	1 uF	20%, 16V, Sal	
	C...135	59.05.1102	1 nF	1%, 63V, PETP	
	C...136	59.22.5220	22 uF	20%, 25V, El	
	C...137	59.22.5220	22 uF	20%, 25V, El	
	C...138	59.34.1150	15 pF	5%, 63V, Cer	
	C...139		not used		
	C...140	59.34.1120	12 pF	5%, 63V, Cer	
	C...141	59.22.6100	10 uF	20%, 35V, El	
	C...142	59.06.5103	10 nF	5%, 63V, PETP	
	C...143	59.22.5220	22 uF	20%, 25V, El	
	C...144	59.22.5220	22 uF	20%, 25V, El	
	C...145	59.22.6100	10 uF	20%, 35V, El	
	C...146	59.06.0104	100 nF	10%, 63V, PETP	
	C...147	59.05.1101	100 pF	1%, 63V, PETP	
	C...148	59.22.5220	22 uF	20%, 25V, El	

STUDER (00) 90/01/22 BBT READ UNIT CUE TRACKS PL 1.862.723.81 PAGE 4

IND.	POS.NO.	PART NO.	VALUE	SPECIFICATIONS / EQUIVALENT	MANUF.
	C...149	59.34.4181	180 pF	5%, 63V, Cer	
	C...150	59.06.5102	1 nF	5%, 63V, PETP	
	C...151	59.06.0104	100 nF	10%, 63V, PETP	
	C...152	59.22.5470	47 uF	20%, 25V, El	
	C...153	59.06.5472	4.7 nF	5%, 63V, PETP	
	C...154	59.06.0223	22 nF	10%, 63V, PETP	
	C...155	59.34.2330	33 pF	5%, 63V, Cer	
	C...156	59.22.5220	22 uF	20%, 25V, El	
	C...157	59.34.2330	33 pF	5%, 63V, Cer	
	C...158	59.06.5103	10 nF	5%, 63V, PETP	
	C...159	59.34.2330	33 pF	5%, 63V, Cer	
	C...160	59.05.1331	330 pF	1%, 63V, PETP	
	C...161	59.05.1472	4.7 nF	1%, 63V, PETP	
	C...162	59.06.0103	10 nF	10%, 63V, PETP	
	C...163	59.06.5103	10 nF	5%, 63V, PETP	
	C...164	59.34.4221	220 pF	20%, 63V, Cer	
	C...165	59.34.4221	220 pF	20%, 63V, Cer	
	D.....1	50.04.0127	BAT 85		SES,Th
	D.....2	50.04.0127	BAT 85		SES,Th
	D.....3	50.04.0127	BAT 85		SES,Th
	D.....4	50.04.0125	1N4448		Fc,ITT,Ph,SES,Tf
	D.....5	50.04.0125	1N4448		Fc,ITT,Ph,SES,Tf
	D.....6	50.04.0127	BAT 85		SES,Th
	D.....7	50.04.0127	BAT 85		SES,Th
	D.....8	50.04.0127	BAT 85		SES,Th
	D.....9	50.04.0127	BAT 85		SES,Th
	D....10	50.04.0125	1N4448		Fc,ITT,Ph,SES,Tf
	D....11	50.04.0125	1N4448		Fc,ITT,Ph,SES,Tf
	D....12	50.04.0512	1N5818 RL	1N5819 RL	Mot
	D....13	50.04.0125	1N4448		Fc,ITT,Ph,SES,Tf
	D....14	50.04.0125	1N4448		Fc,ITT,Ph,SES,Tf
	D....15	50.04.0127	BAT 85		SES,Th
	D....16	50.04.0127	BAT 85		SES,Th
	D....17	50.04.0122	1N4001		ITT,Ph,Tf
	D....18	50.04.0122	1N4001		ITT,Ph,Tf
	D....19	50.04.0127	BAT 85		SES,Th

STUDER (00) 90/01/22 BBT READ UNIT CUE TRACKS PL 1.862.723.81 PAGE 5

IND.	POS.NO.	PART NO.	VALUE	SPECIFICATIONS / EQUIVALENT	MANUF.
	D....20	50.04.0127	BAT 85		SES,Th
	D....21	50.04.0125	1N4448		Fc,ITT,Ph,SES,Tf
	D....22	50.04.0125	1N4448		Fc,ITT,Ph,SES,Tf
	D....23	50.04.0125	1N4448		Fc,ITT,Ph,SES,Tf
	D....24	50.04.0125	1N4448		Fc,ITT,Ph,SES,Tf
	D....25	50.04.0127	BAT 85		SES,Th
	D....26	50.04.0127	BAT 85		SES,Th
	D....27	50.04.0127	BAT 85		SES,Th
	D....28	50.04.0127	BAT 85		SES,Th
	D....29	50.04.0125	1N4448		Fc,ITT,Ph,SES,Tf
	D....30	50.04.0127	BAT 85		SES,Th
	D....31	50.04.0127	BAT 85		SES,Th
	D....32	50.04.0125	1N4448		Fc,ITT,Ph,SES,Tf
	D....33	50.04.0127	BAT 85		SES,Th
	D....34		not used		
	D....35		not used		
	D....36	50.04.0127	BAT 85		SES,Th
	D....37	50.04.0127	BAT 85		SES,Th
	DL....1	50.04.2121	TLUR 2401	LED, red	Tf
	DL....2	50.04.2121	TLUR 2401	LED, red	Tf
	DL....3	50.04.2121	TLUR 2401	LED, red	Tf
	DL....4	50.04.2121	TLUR 2401	LED, red	Tf
	DL....5	50.04.2121	TLUR 2401	LED, red	Tf
	DL....6	50.04.2121	TLUR 2401	LED, red	Tf
	DL....7	50.04.2121	TLUR 2401	LED, red	Tf
	DL....8	50.04.2121	TLUR 2401	LED, red	Tf
	DV....1	50.04.1108	ZD 5V6	0.5W	SES,Ph
	DV....2	50.04.1108	ZD 5V6	0.5W	SES,Ph
	DV....3	50.04.1114	ZD 10V	0.5W	SES,Ph
	DV....4	50.04.1114	ZD 10V	0.5W	SES,Ph
	DV....5	50.04.1108	ZD 5V6	0.5W	SES,Ph
	DV....6	50.04.1108	ZD 5V6	0.5W	SES,Ph
	IC....1	50.11.0135	MF 4	SWITCHED CAPACITOR FILTER	NS
	IC....2	50.09.0102	LF 357N		NS

STUDER (00) 90/01/22 BBT READ UNIT CUE TRACKS PL 1.862.723.81 PAGE 6

IND.	POS.NO.	PART NO.	VALUE	SPECIFICATIONS / EQUIVALENT	MANUF.
	IC....3	50.11.0114	LM 311	COMPARATOR	NS
	IC....4	50.17.1132	MC74HC132	N 74 HC 132	Mot,NS,TI
	IC....5	50.09.0117	MC 33078P		Mot
	IC....6	50.07.0024	CD 4052		Mot,Ph,SGS
	IC....7	50.09.0105	NE 5532N		Ra,Sig
	IC....8	50.09.0101	TL 072 CP	TDB 0353 DP	Mot,TI,SGS,Tho
	IC....9	50.07.0046	CD 4046	VCO	Mot,Ph,SGS
	IC...10	50.11.0135	MF 4	SWITCHED CAPACITOR FILTER	NS
	IC...11	50.11.0114	LM 311	COMPARATOR	NS
	IC...12	50.09.0101	TL 072 CP	TDB 0353 DP	Mot,TI,SGS,Tho
	IC...13	50.09.0101	TL 072 CP	TDB 0353 DP	Mot,TI,SGS,Tho
	IC...14	50.11.0152	LM 319	DUAL COMPARATOR	NS
	IC...15	50.09.0117	MC 33078P		Mot
	IC...16	50.07.1538	CD 4538		Mot,Ph,SGS
	IC...17	50.09.0117	MC 33078P		Mot
	IC...18	50.09.0101	TL 072 CP	TDB 0353 DP	Mot,TI,SGS,Tho
	IC...19	50.10.0105	LM 337KC	REGULATOR	Tho,NS
	IC...20	50.07.0013	CD 4013		Mot,Ph,SGS
	IC...21	50.07.0520	CD 4520		Mot,Ph,SGS
	IC...22	50.07.0015	CD 4053		Mot,Ph,SGS
	IC...23	50.09.0117	MC 33078P		Mot
	IC...24	50.07.0036	ICM 7555		Intersil
	IC...25	50.09.0101	TL 072 CP	TDB 0353 DP	Mot,TI,SGS,Tho
	IC...26	50.07.0015	CD 4053		Mot,Ph,SGS
	IC...27	50.07.0015	CD 4053		Mot,Ph,SGS
	IC...28	50.09.0117	MC 33078P		Mot
	IC...29	50.11.0134	NE 570	COMPANDOR	NS
	IC...30	50.09.0113	HA3-5114-	5QUAD OP AMP	Harris
	IC...31	50.10.0104	LM 317SP	REGULATOR	Tho,NS
	IC...32	50.07.1538	CD 4538		Mot,Ph,SGS
	IC...33	50.15.0109	AM26LS33C	N DS 26 LS 33 PC	AMD,NS
	IC...34	50.09.0117	MC 33078P		Mot
	IC...35	50.09.0101	TL 072 CP	TDB 0353 DP	Mot,TI,SGS,Tho
	IC...36	50.09.0117	MC 33078P		Mot
	IC...37	50.09.0101	TL 072 CP	TDB 0353 DP	Mot,TI,SGS,Tho
	IC...38	50.11.0152	LM 319	DUAL COMPARATOR	NS
	IC...39	50.09.0101	TL 072 CP	TDB 0353 DP	Mot,TI,SGS,Tho

STUDER (00) 90/01/22 BBT READ UNIT CUE TRACKS PL 1.862.723.81 PAGE 7

IND.	POS.NO.	PART NO.	VALUE	SPECIFICATIONS / EQUIVALENT	MANUF.
	IC...40	50.11.0114	LM 311	COMPARATOR	NS
	IC...41	50.07.0046	CD 4046	VCO	Mot,Ph,SGS
	IC...42	50.11.0135	MF 4	SWITCHED CAPACITOR FILTER	NS
	IC...43	50.07.0024	CD 4052		Mot,Ph,SGS
	IC...44	50.11.0135	MF 4	SWITCHED CAPACITOR FILTER	NS
	IC...45	50.09.0105	NE 5532N		Ra,Sig
	IC...46	50.09.0101	TL 072 CP	TDB 0353 DP	Mot,TI,SGS,Tho
	IC...47	50.17.1132	MC74HC132	N 74 HC 132	Mot,NS,TI
	IC...48	50.09.0102	LF 357N		NS
	IC...49	50.11.0114	LM 311	COMPARATOR	NS
	IC...50	50.09.0117	MC 33078P		Mot
	L.....1	62.03.0010	47 uH	2 A, Tokin nr. SN - 5 - 400	
	L.....2	62.03.0010	47 uH	2 A, Tokin nr. SN - 5 - 400	
	L.....3	62.03.0010	47 uH	2 A, Tokin nr. SN - 5 - 400	
	P.....8	54.01.0020	see note 1		
	P.....9	54.01.0020	see note 1		
	P....10	54.01.0020	see note 1		
	P....11	54.01.0020	see note 1		
	P....12	54.01.0020	see note 1		
	P....13	54.01.0020	see note 1		
	P....21	54.01.0020	see note 1		
	P....22	54.01.0020	see note 1		
	P....23	54.01.0020	see note 1		
	P....26	54.01.0020	see note 1		
	P....27	54.01.0020	see note 1		
	P....28	54.01.0020	see note 1		
	P....30	54.01.0020	see note 1		
	P....31	54.01.0020	see note 1		
	P....32	54.01.0020	see note 1		
	P....33	54.01.0020	see note 1		
	P....34	54.01.0020	see note 1		
	P....35	54.01.0020	see note 1		
	Q.....1	50.03.1505	VN0808 M		Six
	Q.....2	50.03.0407	BC 550 C		Mot,Ph,Sie

STUDER (00) 90/01/22 BBT READ UNIT CUE TRACKS PL 1.862.723.81 PAGE 8

IND.	POS.NO.	PART NO.	VALUE	SPECIFICATIONS / EQUIVALENT	MANUF.
	Q.....3	50.03.0496	BC 560 E		Sie
	Q.....4	50.03.0496	BC 560 E		Sie
	Q.....5	50.03.0407	BC 550 C		Mot,Ph,Sie
	Q.....6	50.03.1505	VN0808 M		Six
	Q.....7	50.03.0407	BC 550 C		Mot,Ph,Sie
	Q.....8	50.03.0496	BC 560 E		Sie
	Q.....9	50.03.0350	J 112		Mot,NS,Six,Is
	Q....10	50.03.0216	J 111		Mot,NS,Six,Is
	Q....11	50.03.0407	BC 550 C		Mot,Ph,Sie
	Q....12	50.03.0350	J 112		Mot,NS,Six,Is
	Q....13	50.03.1505	VN0808 M		Six
	Q....14	50.03.0216	J 111		Mot,NS,Six,Is
	Q....15	50.03.0407	BC 550 C		Mot,Ph,Sie
	Q....16	50.03.0496	BC 560 E		Sie
	Q....17	50.03.0496	BC 560 E		Sie
	Q....18	50.03.0496	BC 560 E		Sie
	Q....19	50.03.1505	VN0808 M		Six
	Q....20	50.03.0407	BC 550 C		Mot,Ph,Sie
	Q....21	50.03.0407	BC 550 C		Mot,Ph,Sie
	Q....22	50.03.0407	BC 550 C		Mot,Ph,Sie
	R.....1	57.11.3223	22 kOhm	2%	
	R.....2	57.11.3682	6.8 kOhm	2%	
	R.....3	57.11.3152	1.5 kOhm	2%	
	R.....4	57.11.3182	1.8 kOhm	2%	
	R.....5	57.11.3103	10 kOhm	1%	
	R.....6	57.11.3102	1 kOhm	1%	
	R.....7	57.11.3102	1 kOhm	2%	
	R.....8	57.11.3101	100 Ohm	5%	
	R.....9	57.11.5335	3.3 MOhm	10%	
	R....10	57.11.3334	330 kOhm	5%	
	R....11	57.11.3472	4.7 kOhm	2%	
	R....12	57.11.3222	2.2 kOhm	2%	
	R....13	57.11.3470	47 Ohm	5%	
	R....14	57.11.3470	47 Ohm	5%	
	R....15	57.11.3152	1.5 kOhm	2%	
	R....16	57.11.3104	100 kOhm	5%	

STUDER (00) 90/01/22 BBT READ UNIT CUE TRACKS PL 1.862.723.81 PAGE 9

IND.	POS.NO.	PART NO.	VALUE	SPECIFICATIONS / EQUIVALENT	MANUF.
	R....17	57.11.3471	470 Ohm	2%	
	R....18	57.11.3103	10 kOhm	2%	
	R....19	57.11.3123	12 kOhm	1%	
	R....20	57.11.3102	1 kOhm	2%	
	R....21	57.11.3333	33 kOhm	2%	
	R....22	57.11.3563	56 kOhm	2%	
	R....23	57.11.3242	2.4 kOhm	1%	
	R....24	57.11.3123	12 kOhm	1%	
	R....25	57.11.3273	27 kOhm	2%	
	R....26	57.11.3332	3.3 kOhm	2%	
	R....27	57.11.3222	2.2 kOhm	2%	
	R....28	57.11.3563	56 kOhm	2%	
	R....29	57.11.3223	22 kOhm	2%	
	R....30	57.11.3472	4.7 kOhm	1%	
	R....31	57.11.3152	1.5 kOhm	2%	
	R....32	57.11.3222	2.2 kOhm	5%	
	R....33	57.11.3183	18 kOhm	2%	
	R....34	57.11.3472	4.7 kOhm	2%	
	R....35	57.11.3222	2.2 kOhm	2%	
	R....36	57.11.3392	3.9 kOhm	5%	
	R....37	57.11.3222	2.2 kOhm	2%	
	R....38	57.11.3152	1.5 kOhm	2%	
	R....39	57.11.3102	1 kOhm	2%	
	R....40	57.11.3103	10 kOhm	2%	
	R....41	57.11.3472	4.7 kOhm	2%	
	R....42	57.11.3393	39 kOhm	2%	
	R....43	57.11.3104	100 kOhm	5%	
	R....44	57.11.3104	100 kOhm	5%	
	R....45	57.11.3103	10 kOhm	2%	
	R....46	57.11.3471	470 Ohm	2%	
	R....47	57.11.3332	3.3 kOhm	2%	
	R....48	57.11.3103	10 kOhm	2%	
	R....49	57.11.3562	5.6 kOhm	2%	
	R....50	57.11.3222	2.2 kOhm	2%	
	R....51	57.11.3471	470 Ohm	2%	
	R....52	57.11.3103	10 kOhm	2%	
	R....53	57.11.3103	10 kOhm	2%	

STUDER (00) 90/01/22 BBT READ UNIT CUE TRACKS PL 1.862.723.81 PAGE 10

IND.	POS.NO.	PART NO.	VALUE	SPECIFICATIONS / EQUIVALENT	MANUF.
	R....54	57.11.3821	820 Ohm	1%	
	R....55	57.11.3562	5.6 kOhm	2%	
	R....56	57.11.3105	1 MOhm	5%	
	R....57	57.11.3334	330 kOhm	5%	
	R....58	57.11.3472	4.7 kOhm	1%	
	R....59	57.11.3332	3.3 kOhm	2%	
	R....60	57.11.3479	4.7 Ohm	5%	
	R....61	57.11.3332	3.3 kOhm	2%	
	R....62	57.11.3472	4.7 kOhm	2%	
	R....63	57.11.3223	22 kOhm	2%	
	R....64	57.11.3102	1 kOhm	2%	
	R....65	57.11.3103	10 kOhm	2%	
	R....66	57.11.3103	10 kOhm	2%	
	R....67	57.11.3103	10 kOhm	1%	
	R....68	57.11.3682	6.8 kOhm	1%	
	R....69	57.11.3562	5.6 kOhm	1%	
	R....70	57.11.3392	3.9 kOhm	1%	
	R....71	57.11.3105	1 MOhm	5%	
	R....72	57.11.3273	27 kOhm	1%	
	R....73	57.11.3103	10 kOhm	1%	
	R....74	57.11.3512	5.1 kOhm	1%	
	R....75	57.11.3472	4.7 kOhm	1%	
	R....76	57.11.3362	3.6 kOhm	1%	
	R....77	57.11.3103	10 kOhm	1%	
	R....78	57.11.3392	3.9 kOhm	1%	
	R....79	57.11.3473	47 kOhm	5%	
	R....80	57.11.3103	10 kOhm	2%	
	R....81	57.11.3105	1 MOhm	5%	
	R....82	57.11.3134	130 kOhm	1%	
	R....83	57.11.3102	1 kOhm	2%	
	R....84	57.11.3102	1 kOhm	2%	
	R....85	57.11.3563	56 kOhm	2%	
	R....86	57.11.3103	10 kOhm	1%	
	R....87	57.11.3103	10 kOhm	1%	
	R....88	57.11.3334	330 kOhm	5%	
	R....89	57.11.3471	470 Ohm	2%	
	R....90	57.11.3333	33 kOhm	2%	

STUDER (00) 90/01/22 BBT READ UNIT CUE TRACKS PL 1.862.723.81 PAGE 11

IND.	POS.NO.	PART NO.	VALUE	SPECIFICATIONS / EQUIVALENT	MANUF.
	R....91	57.11.3101	100 Ohm	5%	
	R....92	57.11.3101	100 Ohm	5%	
	R....93	57.11.3153	15 kOhm	2%	
	R....94	57.11.3103	10 kOhm	2%	
	R....95	57.11.3103	10 kOhm	2%	
	R....96	57.11.3153	15 kOhm	2%	
	R....97	57.11.3103	10 kOhm	1%	
	R....98	57.11.3103	10 kOhm	1%	
	R....99	57.11.3102	1 kOhm	2%	
	R...100	57.11.3102	1 kOhm	2%	
	R...101	57.11.3224	220 kOhm	5%	
	R...102	57.11.6226	22 MOhm	10%	
	R...103	57.11.5106	10 MOhm	10%	
	R...104	57.11.3332	3.3 kOhm	2%	
	R...105	57.11.3102	1 kOhm	2%	
	R...106	57.11.3223	22 kOhm	2%	
	R...107	57.11.3102	1 kOhm	2%	
	R...108	57.11.3104	100 kOhm	5%	
	R...109	57.11.3182	1.8 kOhm	2%	
	R...110	57.11.3153	15 kOhm	2%	
	R...111	57.11.3332	3.3 kOhm	2%	
	R...112	57.11.3223	22 kOhm	2%	
	R...113	57.11.3471	470 Ohm	2%	
	R...114	57.11.3471	470 Ohm	2%	
	R...115	57.11.3223	22 kOhm	2%	
	R...116	57.11.3472	4.7 kOhm	1%	
	R...117	57.11.3432	4.3 kOhm	1%	
	R...118	57.11.3103	10 kOhm	2%	
	R...119	57.11.3152	1.5 kOhm	2%	
	R...120	57.11.3223	22 kOhm	2%	
	R...121	57.11.3222	2.2 kOhm	2%	
	R...122	57.11.3102	1 kOhm	1%	
	R...123	57.11.3103	10 kOhm	2%	
	R...124	57.11.3222	2.2 kOhm	2%	
	R...125	57.11.3152	1.5 kOhm	2%	
	R...126	57.11.3473	47 kOhm	5%	
	R...127	57.11.3331	330 Ohm	1%	

STUDER (00) 90/01/22 BBT READ UNIT CUE TRACKS PL 1.862.723.81 PAGE 12

READ UNIT CUE TRACKS 1.862.723.81

IND.	POS.NO.	PART NO.	VALUE	SPECIFICATIONS / EQUIVALENT	MANUF.
	R...128	57.11.3562	5.6 kOhm	1%	
	R...129	57.11.3102	1 kOhm	1%	
	R...130	57.11.3331	330 Ohm	1%	
	R...131	57.11.3222	2.2 kOhm	2%	
	R...132	57.11.3473	47 kOhm	5%	
	R...133	57.11.3103	10 kOhm	2%	
	R...134	57.11.3223	22 kOhm	2%	
	R...135	57.11.3471	470 Ohm	2%	
	R...136	57.11.3471	470 Ohm	2%	
	R...137	57.11.3223	22 kOhm	2%	
	R...138	57.11.3472	4.7 kOhm	1%	
	R...139	57.11.3432	4.3 kOhm	1%	
	R...140	57.11.3103	10 kOhm	1%	
	R...141	57.11.3152	1.5 kOhm	2%	
	R...142	57.11.3223	22 kOhm	2%	
	R...143	57.11.3562	5.6 kOhm	1%	
	R...144	57.11.3102	1 kOhm	2%	
	R...145	57.11.3332	3.3 kOhm	2%	
	R...146	57.11.3222	2.2 kOhm	2%	
	R...147	57.11.3153	15 kOhm	2%	
	R...148	57.11.3103	10 kOhm	2%	
	R...149	57.11.3101	100 Ohm	5%	
	R...150	57.11.3102	1 kOhm	2%	
	R...151	57.11.3103	10 kOhm	2%	
	R...152	57.11.3153	15 kOhm	2%	
	R...153	57.11.3103	10 kOhm	1%	
	R...154	57.11.3103	10 kOhm	1%	
	R...155	57.11.3102	1 kOhm	2%	
	R...156	57.11.3224	220 kOhm	5%	
	R...157	57.11.3102	1 kOhm	2%	
	R...158	57.11.3332	3.3 kOhm	2%	
	R...159	57.11.6226	22 MOhm	10%	
	R...160	57.11.5106	10 MOhm	10%	
	R...161	57.11.3104	100 kOhm	5%	
	R...162	57.11.3102	1 kOhm	2%	
	R...163	57.11.3223	22 kOhm	2%	
	R...164	57.11.3182	1.8 kOhm	2%	

IND.	POS.NO.	PART NO.	VALUE	SPECIFICATIONS / EQUIVALENT	MANUF.
	R...165	57.11.3153	15 kOhm	2%	
	R...166	57.11.3103	10 kOhm	1%	
	R...167	57.11.3333	33 kOhm	2%	
	R...168	57.11.3471	470 Ohm	2%	
	R...169	57.11.3101	100 Ohm	5%	
	R...170	57.11.3101	100 Ohm	5%	
	R...171	57.11.3101	100 Ohm	5%	
	R...172	57.11.3103	10 kOhm	1%	
	R...173	57.11.3105	1 MOhm	5%	
	R...174	57.11.3103	10 kOhm	2%	
	R...175	57.11.3134	130 kOhm	1%	
	R...176	57.11.3102	1 kOhm	2%	
	R...177	57.11.3332	3.3 kOhm	2%	
	R...178	57.11.3563	56 kOhm	2%	
	R...179	57.11.3473	47 kOhm	5%	
	R...180	57.11.3334	330 kOhm	5%	
	R...181	57.11.3152	1.5 kOhm	2%	
	R...182	57.11.3105	1 MOhm	5%	
	R...183	57.11.3102	1 kOhm	2%	
	R...184	57.11.3682	6.8 kOhm	1%	
	R...185	57.11.3562	5.6 kOhm	2%	
	R...186	57.11.3392	3.9 kOhm	1%	
	R...187	57.11.3332	3.3 kOhm	2%	
	R...188	57.11.3472	4.7 kOhm	2%	
	R...189	57.11.3103	10 kOhm	1%	
	R...190	57.11.3273	27 kOhm	1%	
	R...191	57.11.3512	5.1 kOhm	1%	
	R...192	57.11.3472	4.7 kOhm	1%	
	R...193	57.11.3362	3.6 kOhm	1%	
	R...194	57.11.3222	2.2 kOhm	2%	
	R...195	57.11.3223	22 kOhm	2%	
	R...196	57.11.3103	10 kOhm	2%	
	R...197	57.11.3103	10 kOhm	2%	
	R...198	57.11.3103	10 kOhm	1%	
	R...199	57.11.3392	3.9 kOhm	1%	
	R...200	57.11.3472	4.7 kOhm	1%	
	R...201	57.11.3332	3.3 kOhm	2%	

IND.	POS.NO.	PART NO.	VALUE	SPECIFICATIONS / EQUIVALENT	MANUF.
	R...202	57.11.3103	10 kOhm	2%	
	R...203	57.11.3103	10 kOhm	2%	
	R...204	57.11.3103	10 kOhm	1%	
	R...205	57.11.3223	22 kOhm	2%	
	R...206	57.11.3472	4.7 kOhm	1%	
	R...207	57.11.3479	4.7 Ohm	5%	
	R...208	57.11.3105	1 MOhm	5%	
	R...209	57.11.3152	1.5 kOhm	2%	
	R...210	57.11.3334	330 kOhm	5%	
	R...211	57.11.3102	1 kOhm	2%	
	R...212	57.11.3472	4.7 kOhm	2%	
	R...213	57.11.3152	1.5 kOhm	2%	
	R...214	57.11.3104	100 kOhm	5%	
	R...215	57.11.3104	100 kOhm	5%	
	R...216	57.11.3472	4.7 kOhm	2%	
	R...217	57.11.3222	2.2 kOhm	2%	
	R...218	57.11.3222	2.2 kOhm	2%	
	R...219	57.11.3103	10 kOhm	2%	
	R...220	57.11.3222	2.2 kOhm	5%	
	R...221	57.11.3103	10 kOhm	2%	
	R...222	57.11.3471	470 Ohm	2%	
	R...223	57.11.3392	3.9 KOHM	2%	
	R...224	57.11.3470	47 Ohm	5%	
	R...225	57.11.3471	470 Ohm	2%	
	R...226	57.11.3152	1.5 kOhm	2%	
	R...227	57.11.3183	18 kOhm	2%	
	R...228	57.11.3104	100 kOhm	5%	
	R...229	57.11.3471	470 Ohm	2%	
	R...230	57.11.3103	10 kOhm	2%	
	R...231	57.11.3152	1.5 kOhm	2%	
	R...232	57.11.3222	2.2 kOhm	2%	
	R...233	57.11.3333	33 kOhm	2%	
	R...234	57.11.3472	4.7 kOhm	2%	
	R...235	57.11.3222	2.2 kOhm	2%	
	R...236	57.11.3123	12 kOhm	1%	
	R...237	57.11.3242	2.4 kOhm	1%	
	R...238	57.11.3123	12 kOhm	1%	

IND.	POS.NO.	PART NO.	VALUE	SPECIFICATIONS / EQUIVALENT	MANUF.
	R...239	57.11.3332	3.3 kOhm	1%	
	R...240	57.11.3273	27 kOhm	2%	
	R...241	57.11.3821	820 Ohm	1%	
	R...242	57.11.3563	56 kOhm	2%	
	R...243	57.11.3334	330 kOhm	5%	
	R...244	57.11.3102	1 kOhm	1%	
	R...245	57.11.3102	1 kOhm	2%	
	R...246	57.11.3101	100 Ohm	5%	
	R...247	57.11.5335	3.3 MOhm	10%	
	R...248	57.11.3470	47 Ohm	5%	
	R...249	57.11.3103	10 kOhm	1%	
	R...250	57.11.3102	1 kOhm	1%	
	R...251	57.11.3182	1.8 kOhm	1%	
	R...252	57.11.3563	56 kOhm	2%	
	R...253	57.11.3223	22 kOhm	2%	
	R...254	57.11.3682	6.8 kOhm	2%	
	R...255	57.11.3562	5.6 kOhm	2%	
	R...256	57.11.3393	39 kOhm	2%	
	R...257	57.11.3393	39 kOhm	2%	
	R...258	57.11.3822	8.2 kOhm	2%	
	R...259	57.11.3104	100 kOhm	5%	
	R...260	57.11.3479	4.7 Ohm	2%	
	R...261	57.11.3474	470 kOhm	2%	
	R...262	57.11.3222	2.2 kOhm	5%	
	R...263	57.11.3222	2.2 kOhm	5%	
	R...264	57.11.3474	470 kOhm	2%	
	R...265	57.11.3479	4.7 Ohm	2%	
	R...266	57.11.3393	39 kOhm	2%	
	R...267	57.11.3104	100 kOhm	5%	
	R...268	57.11.3822	8.2 kOhm	2%	
	RA....1	58.01.8103	10 kOhm	10%	
	RA....2	58.01.8103	10 kOhm	10%	
	RA....3	58.01.8202	2 kOhm	10%	
	RA....4	58.01.8104	100 kOhm	10%	
	RA....5	58.01.8103	10 kOhm	10%	
	RA....6	58.01.8103	10 kOhm	10%	

IND.	POS.NO.	PART NO.	VALUE	SPECIFICATIONS / EQUIVALENT	MANUF.
	RA....7	58.01.8104	100 kOhm	10%	
	RA....8	58.01.8202	2 kOhm	10%	
	RA....9	58.01.8103	10 kOhm	10%	
	RA...10	58.01.8103	10 kOhm	10%	

Note 1 - Contact pin: Studer Nr. 54.01.0020
Berg Nr. 75 160-102-36
Philips Nr. 2422 025 89303
Bridge: Studer Nr. 54.01.0021
Berg Nr. 65 474-001
Philips Nr. 2422 024 88003

Cer=Ceramic, El=Electrolytic, Sal=Solid aluminum, PETP=Polyesterfilm, PP=Polypropylen.

MANUFACTURER: AMD=Advanced Micro Devices, Fc=Fairchild, ITT=Intermetall, Is=Intersil, Mot=Motorola, NS=National Semiconductors, Ph=Philips, RCA=Radio Corporation of America, SES=Sescosem, SGS=SGS/Ates, Sie=Siemens, Six=Siliconix, Tf=Telefunken, Tho=Thomson, TI=Texas Instruments.

ORIG 90/01/22

RECORD CURRENT SWITCH 1.862.740.00

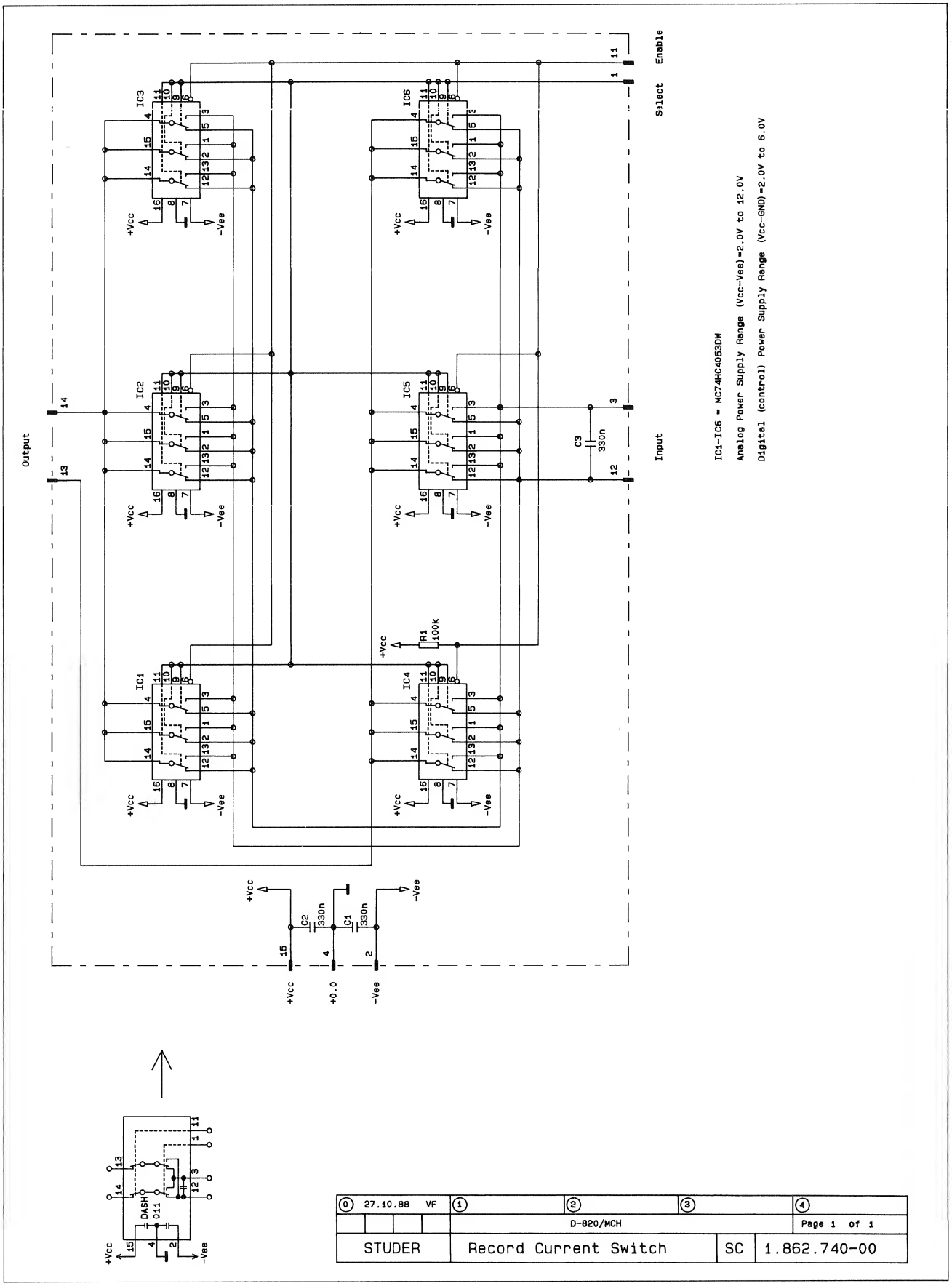

RECORD CURRENT SWITCH 1.862.740.00

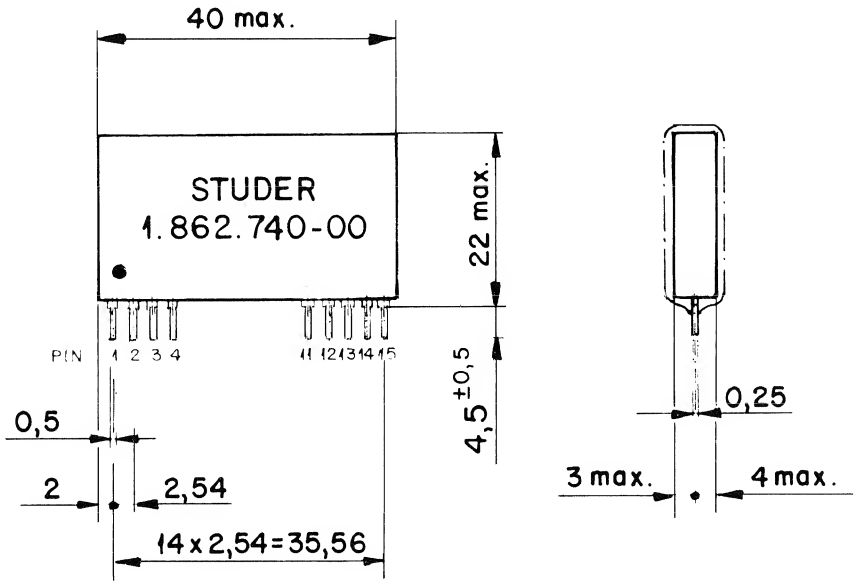

Verlustleistung: total max. 0,3 W dauernd

Umgebungstemperatur: 0 bis 70°C

Komponenten:
- 6x MC 74 HC 4053 DW (SOIC), Motorola
- 3x 330 nF/63 V, multilayer capacitor (Studer Nr. 59.60.1334):
  2220 2B 334 K 9 A A, Philips
  B37 956-K 5334-K62, Siemens
- 1x 100 kΩ resistor (Studer Nr. 57.60.1104)
  MMA 0204-50 Beyschlag

Träger: Keramik

Oberfläche: —·—·— Schutzlack beschichtet und bedruckt.

Schema, Pinbelegung: siehe Beiblatt

geprüft nach PV 1.862.740-00

JUNCTION BOARD PRIMARY RECORD 48 CH 1.862.741.00

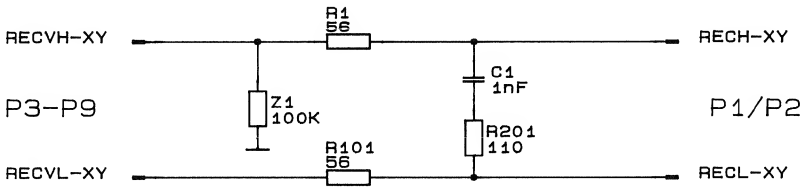

CH1	R1	R101	R201	C1
...	...	...	...	...
CH48	R48	R148	R248	C48
RT	R49	R149	R249	C49
TC	R50	R150	R250	C50
CU1	R51	R151	R251	C51
CU2	R52	R152	R252	C52

© 18.5.89 IVA				
	BAUGRUPPE			PAGE 1 OF1
STUDER	JUNCTION BOARD REC 48 CH		SC	1.862.741.00

JUNCTION BOARD PRIMARY RECORD 48 CH 1.862.741.00

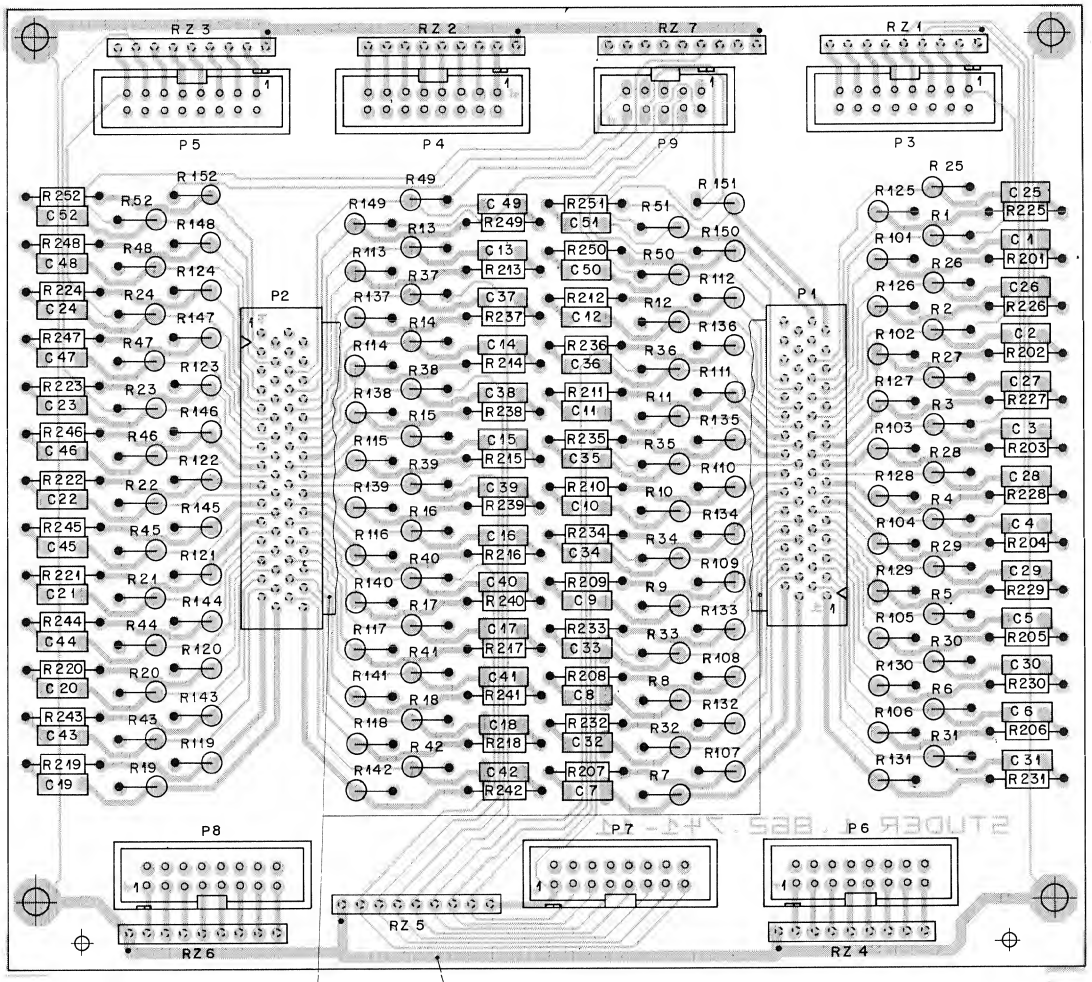

IND.	POS.NO.	PART NO.	VALUE	SPECIFICATIONS / EQUIVALENT	MANUF.
	C.....1	59.40.0102	1 nF	10%, 63V , PETP	
	C.....2	59.40.0102	1 nF	10%, 63V , PETP	
	C.....3	59.40.0102	1 nF	10%, 63V , PETP	
	C.....4	59.40.0102	1 nF	10%, 63V , PETP	
	C.....5	59.40.0102	1 nF	10%, 63V , PETP	
	C.....6	59.40.0102	1 nF	10%, 63V , PETP	
	C.....7	59.40.0102	1 nF	10%, 63V , PETP	
	C.....8	59.40.0102	1 nF	10%, 63V , PETP	
	C.....9	59.40.0102	1 nF	10%, 63V , PETP	
	C....10	59.40.0102	1 nF	10%, 63V , PETP	
	C....11	59.40.0102	1 nF	10%, 63V , PETP	
	C....12	59.40.0102	1 nF	10%, 63V , PETP	
	C....13	59.40.0102	1 nF	10%, 63V , PETP	
	C....14	59.40.0102	1 nF	10%, 63V , PETP	
	C....15	59.40.0102	1 nF	10%, 63V , PETP	
	C....16	59.40.0102	1 nF	10%, 63V , PETP	
	C....17	59.40.0102	1 nF	10%, 63V , PETP	
	C....18	59.40.0102	1 nF	10%, 63V , PETP	
	C....19	59.40.0102	1 nF	10%, 63V , PETP	
	C....20	59.40.0102	1 nF	10%, 63V , PETP	
	C....21	59.40.0102	1 nF	10%, 63V , PETP	
	C....22	59.40.0102	1 nF	10%, 63V , PETP	
	C....23	59.40.0102	1 nF	10%, 63V , PETP	
	C....24	59.40.0102	1 nF	10%, 63V , PETP	
	C....25	59.40.0102	1 nF	10%, 63V , PETP	
	C....26	59.40.0102	1 nF	10%, 63V , PETP	
	C....27	59.40.0102	1 nF	10%, 63V , PETP	
	C....28	59.40.0102	1 nF	10%, 63V , PETP	
	C....29	59.40.0102	1 nF	10%, 63V , PETP	
	C....30	59.40.0102	1 nF	10%, 63V , PETP	
	C....31	59.40.0102	1 nF	10%, 63V , PETP	
	C....32	59.40.0102	1 nF	10%, 63V , PETP	
	C....33	59.40.0102	1 nF	10%, 63V , PETP	
	C....34	59.40.0102	1 nF	10%, 63V , PETP	
	C....35	59.40.0102	1 nF	10%, 63V , PETP	
	C....36	59.40.0102	1 nF	10%, 63V , PETP	
	C....37	59.40.0102	1 nF	10%, 63V , PETP	

S T U D E R (00) 89/05/09 IVA JUNCTION BOARD PRIM. REC 48 CH PL 1.862.741.00 PAGE 1

IND.	POS.NO.	PART NO.	VALUE	SPECIFICATIONS / EQUIVALENT	MANUF.
	C....38	59.40.0102	1 nF	10%, 63V , PETP	
	C....39	59.40.0102	1 nF	10%, 63V , PETP	
	C....40	59.40.0102	1 nF	10%, 63V , PETP	
	C....41	59.40.0102	1 nF	10%, 63V , PETP	
	C....42	59.40.0102	1 nF	10%, 63V , PETP	
	C....43	59.40.0102	1 nF	10%, 63V , PETP	
	C....44	59.40.0102	1 nF	10%, 63V , PETP	
	C....45	59.40.0102	1 nF	10%, 63V , PETP	
	C....46	59.40.0102	1 nF	10%, 63V , PETP	
	C....47	59.40.0102	1 nF	10%, 63V , PETP	
	C....48	59.40.0102	1 nF	10%, 63V , PETP	
	C....49	59.40.0102	1 nF	10%, 63V , PETP	
	C....50	59.40.0102	1 nF	10%, 63V , PETP	
	C....51	59.40.0102	1 nF	10%, 63V , PETP	
	C....52	59.40.0102	1 nF	10%, 63V , PETP	
	P.....1	1.862.405.01	Cable	60 Contacts, Flat Cable	
	P.....2	1.862.405.01	Cable	60 Contacts, Flat Cable	
	P.....3	54.14.2002	Connector	16 Contacts, Flat Cable	
	P.....4	54.14.2002	Connector	16 Contacts, Flat Cable	
	P.....5	54.14.2002	Connector	16 Contacts, Flat Cable	
	P.....6	54.14.2002	Connector	16 Contacts, Flat Cable	
	P.....7	54.14.2002	Connector	16 Contacts, Flat Cable	
	P.....8	54.14.2002	Connector	16 Contacts, Flat Cable	
	P.....9	54.14.2001	Connector	10 Contacts, Flat Cable	
	R.....1	57.99.1800	56 Ohm	2%, .5 W,VERT.	
	R.....2	57.99.1800	56 Ohm	2%, .5 W,VERT.	
	R.....3	57.99.1800	56 Ohm	2%, .5 W,VERT.	
	R.....4	57.99.1800	56 Ohm	2%, .5 W,VERT.	
	R.....5	57.99.1800	56 Ohm	2%, .5 W,VERT.	
	R.....6	57.99.1800	56 Ohm	2%, .5 W,VERT.	
	R.....7	57.99.1800	56 Ohm	2%, .5 W,VERT.	
	R.....8	57.99.1800	56 Ohm	2%, .5 W,VERT.	
	R.....9	57.99.1800	56 Ohm	2%, .5 W,VERT.	
	R....10	57.99.1800	56 Ohm	2%, .5 W,VERT.	
	R....11	57.99.1800	56 Ohm	2%, .5 W,VERT.	

S T U D E R (00) 89/05/09 IVA JUNCTION BOARD PRIM. REC 48 CH PL 1.862.741.00 PAGE 2

JUNCTION BOARD PRIMARY RECORD 48 CH 1.862.741.00

IND.	POS.NO.	PART NO.	VALUE	SPECIFICATIONS / EQUIVALENT	MANUF.
	R....12	57.99.1800	56 Ohm	2%, .5 W,VERT.	
	R....13	57.99.1800	56 Ohm	2%, .5 W,VERT.	
	R....14	57.99.1800	56 Ohm	2%, .5 W,VERT.	
	R....15	57.99.1800	56 Ohm	2%, .5 W,VERT.	
	R....16	57.99.1800	56 Ohm	2%, .5 W,VERT.	
	R....17	57.99.1800	56 Ohm	2%, .5 W,VERT.	
	R....18	57.99.1800	56 Ohm	2%, .5 W,VERT.	
	R....19	57.99.1800	56 Ohm	2%, .5 W,VERT.	
	R....20	57.99.1800	56 Ohm	2%, .5 W,VERT.	
	R....21	57.99.1800	56 Ohm	2%, .5 W,VERT.	
	R....22	57.99.1800	56 Ohm	2%, .5 W,VERT.	
	R....23	57.99.1800	56 Ohm	2%, .5 W,VERT.	
	R....24	57.99.1800	56 Ohm	2%, .5 W,VERT.	
	R....25	57.99.1800	56 Ohm	2%, .5 W,VERT.	
	R....26	57.99.1800	56 Ohm	2%, .5 W,VERT.	
	R....27	57.99.1800	56 Ohm	2%, .5 W,VERT.	
	R....28	57.99.1800	56 Ohm	2%, .5 W,VERT.	
	R....29	57.99.1800	56 Ohm	2%, .5 W,VERT.	
	R....30	57.99.1800	56 Ohm	2%, .5 W,VERT.	
	R....31	57.99.1800	56 Ohm	2%, .5 W,VERT.	
	R....32	57.99.1800	56 Ohm	2%, .5 W,VERT.	
	R....33	57.99.1800	56 Ohm	2%, .5 W,VERT.	
	R....34	57.99.1800	56 Ohm	2%, .5 W,VERT.	
	R....35	57.99.1800	56 Ohm	2%, .5 W,VERT.	
	R....36	57.99.1800	56 Ohm	2%, .5 W,VERT.	
	R....37	57.99.1800	56 Ohm	2%, .5 W,VERT.	
	R....38	57.99.1800	56 Ohm	2%, .5 W,VERT.	
	R....39	57.99.1800	56 Ohm	2%, .5 W,VERT.	
	R....40	57.99.1800	56 Ohm	2%, .5 W,VERT.	
	R....41	57.99.1800	56 Ohm	2%, .5 W,VERT.	
	R....42	57.99.1800	56 Ohm	2%, .5 W,VERT.	
	R....43	57.99.1800	56 Ohm	2%, .5 W,VERT.	
	R....44	57.99.1800	56 Ohm	2%, .5 W,VERT.	
	R....45	57.99.1800	56 Ohm	2%, .5 W,VERT.	
	R....46	57.99.1800	56 Ohm	2%, .5 W,VERT.	
	R....47	57.99.1800	56 Ohm	2%, .5 W,VERT.	
	R....48	57.99.1800	56 Ohm	2%, .5 W,VERT.	

S T U D E R (00) 89/05/09 IVA JUNCTION BOARD PRIM. REC 48 CH PL 1.862.741.00 PAGE 3

IND.	POS.NO.	PART NO.	VALUE	SPECIFICATIONS / EQUIVALENT	MANUF.
	R....49	57.99.1800	56 Ohm	2%, .5 W,VERT.	
	R....50	57.99.1800	56 Ohm	2%, .5 W,VERT.	
	R....51	57.99.1800	56 Ohm	2%, .5 W,VERT.	
	R....52	57.99.1800	56 Ohm	2%, .5 W,VERT.	
	R...101	57.99.1800	56 Ohm	2%, .5 W,VERT.	
	R...102	57.99.1800	56 Ohm	2%, .5 W,VERT.	
	R...103	57.99.1800	56 Ohm	2%, .5 W,VERT.	
	R...104	57.99.1800	56 Ohm	2%, .5 W,VERT.	
	R...105	57.99.1800	56 Ohm	2%, .5 W,VERT.	
	R...106	57.99.1800	56 Ohm	2%, .5 W,VERT.	
	R...107	57.99.1800	56 Ohm	2%, .5 W,VERT.	
	R...108	57.99.1800	56 Ohm	2%, .5 W,VERT.	
	R...109	57.99.1800	56 Ohm	2%, .5 W,VERT.	
	R...110	57.99.1800	56 Ohm	2%, .5 W,VERT.	
	R...111	57.99.1800	56 Ohm	2%, .5 W,VERT.	
	R...112	57.99.1800	56 Ohm	2%, .5 W,VERT.	
	R...113	57.99.1800	56 Ohm	2%, .5 W,VERT.	
	R...114	57.99.1800	56 Ohm	2%, .5 W,VERT.	
	R...115	57.99.1800	56 Ohm	2%, .5 W,VERT.	
	R...116	57.99.1800	56 Ohm	2%, .5 W,VERT.	
	R...117	57.99.1800	56 Ohm	2%, .5 W,VERT.	
	R...118	57.99.1800	56 Ohm	2%, .5 W,VERT.	
	R...119	57.99.1800	56 Ohm	2%, .5 W,VERT.	
	R...120	57.99.1800	56 Ohm	2%, .5 W,VERT.	
	R...121	57.99.1800	56 Ohm	2%, .5 W,VERT.	
	R...122	57.99.1800	56 Ohm	2%, .5 W,VERT.	
	R...123	57.99.1800	56 Ohm	2%, .5 W,VERT.	
	R...124	57.99.1800	56 Ohm	2%, .5 W,VERT.	
	R...125	57.99.1800	56 Ohm	2%, .5 W,VERT.	
	R...126	57.99.1800	56 Ohm	2%, .5 W,VERT.	
	R...127	57.99.1800	56 Ohm	2%, .5 W,VERT.	
	R...128	57.99.1800	56 Ohm	2%, .5 W,VERT.	
	R...129	57.99.1800	56 Ohm	2%, .5 W,VERT.	
	R...130	57.99.1800	56 Ohm	2%, .5 W,VERT.	
	R...131	57.99.1800	56 Ohm	2%, .5 W,VERT.	
	R...132	57.99.1800	56 Ohm	2%, .5 W,VERT.	
	R...133	57.99.1800	56 Ohm	2%, .5 W,VERT.	

S T U D E R (00) 89/05/09 IVA JUNCTION BOARD PRIM. REC 48 CH PL 1.862.741.00 PAGE 4

IND.	POS.NO.	PART NO.	VALUE	SPECIFICATIONS / EQUIVALENT	MANUF.
	R...134	57.99.1800	56 Ohm	2%, .5 W,VERT.	
	R...135	57.99.1800	56 Ohm	2%, .5 W,VERT.	
	R...136	57.99.1800	56 Ohm	2%, .5 W,VERT.	
	R...137	57.99.1800	56 Ohm	2%, .5 W,VERT.	
	R...138	57.99.1800	56 Ohm	2%, .5 W,VERT.	
	R...139	57.99.1800	56 Ohm	2%, .5 W,VERT.	
	R...140	57.99.1800	56 Ohm	2%, .5 W,VERT.	
	R...141	57.99.1800	56 Ohm	2%, .5 W,VERT.	
	R...142	57.99.1800	56 Ohm	2%, .5 W,VERT.	
	R...143	57.99.1800	56 Ohm	2%, .5 W,VERT.	
	R...144	57.99.1800	56 Ohm	2%, .5 W,VERT.	
	R...145	57.99.1800	56 Ohm	2%, .5 W,VERT.	
	R...146	57.99.1800	56 Ohm	2%, .5 W,VERT.	
	R...147	57.99.1800	56 Ohm	2%, .5 W,VERT.	
	R...148	57.99.1800	56 Ohm	2%, .5 W,VERT.	
	R...149	57.99.1800	56 Ohm	2%, .5 W,VERT.	
	R...150	57.99.1800	56 Ohm	2%, .5 W,VERT.	
	R...151	57.99.1800	56 Ohm	2%, .5 W,VERT.	
	R...152	57.99.1800	56 Ohm	2%, .5 W,VERT.	
	R...201	57.11.3111	110 Ohm	1%, 0207, MF	
	R...202	57.11.3111	110 Ohm	1%, 0207, MF	
	R...203	57.11.3111	110 Ohm	1%, 0207, MF	
	R...204	57.11.3111	110 Ohm	1%, 0207, MF	
	R...205	57.11.3111	110 Ohm	1%, 0207, MF	
	R...206	57.11.3111	110 Ohm	1%, 0207, MF	
	R...207	57.11.3111	110 Ohm	1%, 0207, MF	
	R...208	57.11.3111	110 Ohm	1%, 0207, MF	
	R...209	57.11.3111	110 Ohm	1%, 0207, MF	
	R...210	57.11.3111	110 Ohm	1%, 0207, MF	
	R...211	57.11.3111	110 Ohm	1%, 0207, MF	
	R...212	57.11.3111	110 Ohm	1%, 0207, MF	
	R...213	57.11.3111	110 Ohm	1%, 0207, MF	
	R...214	57.11.3111	110 Ohm	1%, 0207, MF	
	R...215	57.11.3111	110 Ohm	1%, 0207, MF	
	R...216	57.11.3111	110 Ohm	1%, 0207, MF	
	R...217	57.11.3111	110 Ohm	1%, 0207, MF	
	R...218	57.11.3111	110 Ohm	1%, 0207, MF	

S T U D E R (00) 89/05/09 IVA JUNCTION BOARD PRIM. REC 48 CH PL 1.862.741.00 PAGE 5

IND.	POS.NO.	PART NO.	VALUE	SPECIFICATIONS / EQUIVALENT	MANUF.
	R...219	57.11.3111	110 Ohm	1%, 0207, MF	
	R...220	57.11.3111	110 Ohm	1%, 0207, MF	
	R...221	57.11.3111	110 Ohm	1%, 0207, MF	
	R...222	57.11.3111	110 Ohm	1%, 0207, MF	
	R...223	57.11.3111	110 Ohm	1%, 0207, MF	
	R...224	57.11.3111	110 Ohm	1%, 0207, MF	
	R...225	57.11.3111	110 Ohm	1%, 0207, MF	
	R...226	57.11.3111	110 Ohm	1%, 0207, MF	
	R...227	57.11.3111	110 Ohm	1%, 0207, MF	
	R...228	57.11.3111	110 Ohm	1%, 0207, MF	
	R...229	57.11.3111	110 Ohm	1%, 0207, MF	
	R...230	57.11.3111	110 Ohm	1%, 0207, MF	
	R...231	57.11.3111	110 Ohm	1%, 0207, MF	
	R...232	57.11.3111	110 Ohm	1%, 0207, MF	
	R...233	57.11.3111	110 Ohm	1%, 0207, MF	
	R...234	57.11.3111	110 Ohm	1%, 0207, MF	
	R...235	57.11.3111	110 Ohm	1%, 0207, MF	
	R...236	57.11.3111	110 Ohm	1%, 0207, MF	
	R...237	57.11.3111	110 Ohm	1%, 0207, MF	
	R...238	57.11.3111	110 Ohm	1%, 0207, MF	
	R...239	57.11.3111	110 Ohm	1%, 0207, MF	
	R...240	57.11.3111	110 Ohm	1%, 0207, MF	
	R...241	57.11.3111	110 Ohm	1%, 0207, MF	
	R...242	57.11.3111	110 Ohm	1%, 0207, MF	
	R...243	57.11.3111	110 Ohm	1%, 0207, MF	
	R...244	57.11.3111	110 Ohm	1%, 0207, MF	
	R...245	57.11.3111	110 Ohm	1%, 0207, MF	
	R...246	57.11.3111	110 Ohm	1%, 0207, MF	
	R...247	57.11.3111	110 Ohm	1%, 0207, MF	
	R...248	57.11.3111	110 Ohm	1%, 0207, MF	
	R...249	57.11.3111	110 Ohm	1%, 0207, MF	
	R...250	57.11.3111	110 Ohm	1%, 0207, MF	
	R...251	57.11.3111	110 Ohm	1%, 0207, MF	
	R...252	57.11.3111	110 Ohm	1%, 0207, MF	
	RZ....1	57.88.4104	8*100 kOhm	2%, SIP 9	
	RZ....2	57.88.4104	8*100 kOhm	2%, SIP 9	

S T U D E R (00) 89/05/09 IVA JUNCTION BOARD PRIM. REC 48 CH PL 1.862.741.00 PAGE 6

IND.	POS.NO.	PART NO.	VALUE	SPECIFICATIONS / EQUIVALENT	MANUF.
	RZ....3	57.88.4104	8*100 kOhm	2%, SIP 9	
	RZ....4	57.88.4104	8*100 kOhm	2%, SIP 9	
	RZ....5	57.88.4104	8*100 kOhm	2%, SIP 9	
	RZ....6	57.88.4104	8*100 kOhm	2%, SIP 9	
	RZ....7	57.88.4104	8*100 kOhm	2%, SIP 9	

PETP=Polyesterfilm

MANUFACTURER: Fc=Fairchlid, Fe=Ferranti, Is=Intersil, ITT=Intermetall, Mot=Motorola, NS=National Semiconductors, Ph=Philips, SES=Sescosem, SGS=SGS/Ates, Sie=Siemens, Sig=Signetics, Six=Siliconix, Tf=Telefunken, Tho=Thomson, TI=Texas Instruments.

ORIG 89/05/09

S T U D E R (00) 89/05/09 IVA JUNCTION BOARD PRIM. REC 48 CH PL 1.862.741.00 PAGE 7

EQUALIZER MODULE 1.862.742.00

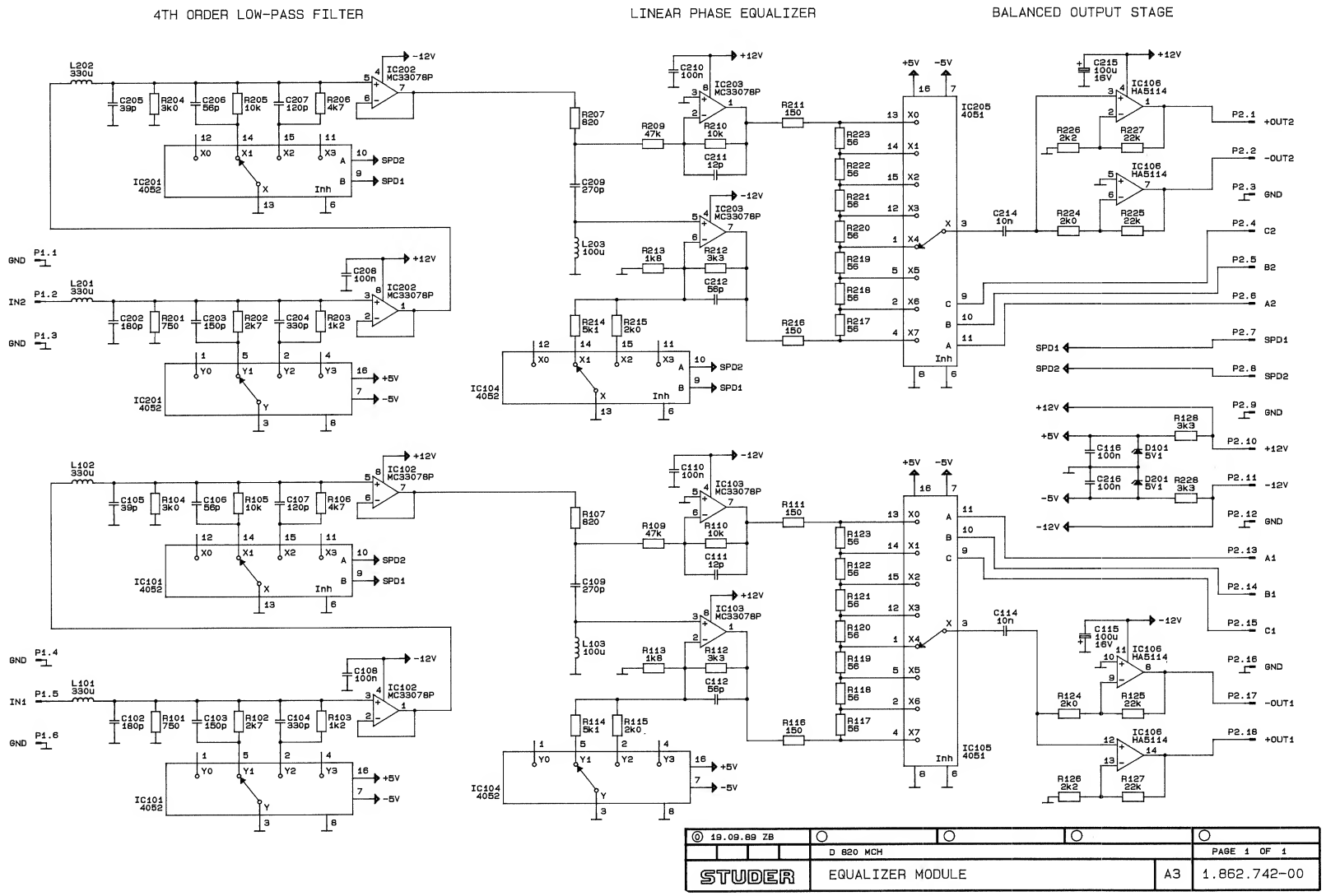

EQUALIZER MODULE 1.862.742.00

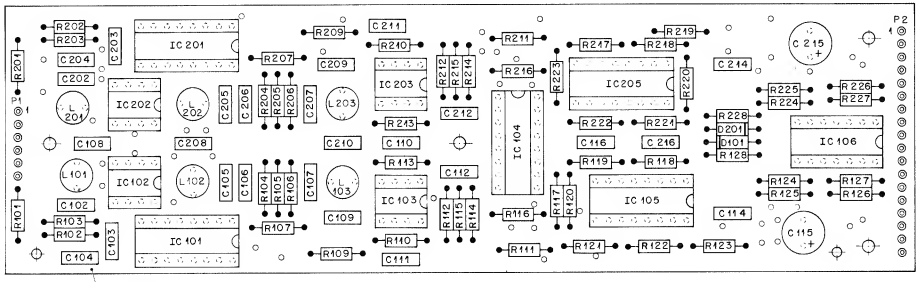

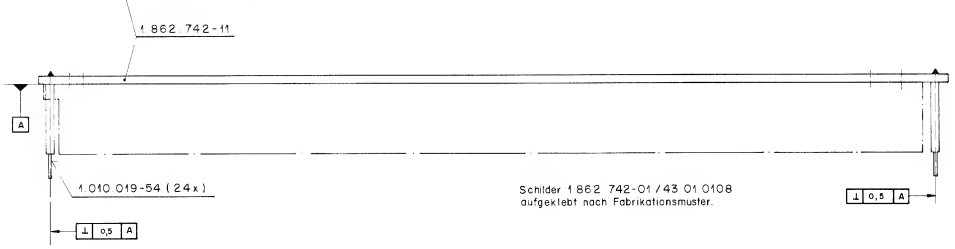

IND.	POS.NO.	PART NO.	VALUE	SPECIFICATIONS / EQUIVALENT	MANUF.
	C...102	59.34.4181	180 pF	5%, 63V, Cer	
	C...103	59.34.4151	150 pF	5%, 63V, Cer	
	C...104	59.34.4331	330 pF	5%, 63V, Cer	
	C...105	59.34.2390	39 pF	5%, 63V, Cer	
	C...106	59.34.4560	56 pF	5%, 63V, Cer	
	C...107	59.34.4121	120 pF	5%, 63V, Cer	
	C...108	59.06.0104	100 nF	10%, 63V, PETP	
	C...109	59.34.4271	270 pF	5%, 63V, Cer	
	C...110	59.06.0104	100 nF	10%, 63V, PETP	
	C...111	59.34.1120	12 pF	5%, 63V, Cer	
	C...112	59.34.4560	56 pF	5%, 63V, Cer	
	C...114	59.06.0103	10 nF	10%, 63V, PETP	
	C...115	59.22.5101	100 uF	-20%, 25V, El	
	C...116	59.06.0104	100 nF	10%, 63V, PETP	
	C...202	59.34.4181	180 pF	5%, 63V, Cer	
	C...203	59.34.4151	150 pF	5%, 63V, Cer	
	C...204	59.34.4331	330 pF	5%, 63V, Cer	
	C...205	59.34.2390	39 pF	5%, 63V, Cer	
	C...206	59.34.4560	56 pF	5%, 63V, Cer	
	C...207	59.34.4121	120 pF	5%, 63V, Cer	
	C...208	59.06.0104	100 nF	10%, 63V, PETP	
	C...209	59.34.4271	270 pF	5%, 63V, Cer	
	C...210	59.06.0104	100 nF	10%, 63V, PETP	
	C...211	59.34.1120	12 pF	5%, 63V, Cer	
	C...212	59.34.4560	56 pF	5%, 63V, Cer	
	C...214	59.06.0103	10 nF	10%, 63V, PETP	
	C...215	59.22.5101	100 uF	-20%, 25V, El	
	C...216	59.06.0104	100 nF	10%, 63V, PETP	
	D...101	50.04.1112	5.1 V	Z, 0.4W	ITT,Mot,Ph,SGS,Tf,Tho
	D...201	50.04.1112	5.1 V	Z, 0.4W	ITT,Mot,Ph,SGS,Tf,Tho
	IC..101	50.07.0024	4052 B		Mot,Ph,SGS,Tho
	IC..102	50.09.0117	MC 3307B P		Mot
	IC..103	50.09.0117	MC 3307B P		Mot
	IC..104	50.07.0024	4052 B		Mot,Ph,SGS,Tho
	IC..105	50.07.0051	4051 B		Mot,Ph,RCA,SGS,Tho,To

IND.	POS.NO.	PART NO.	VALUE	SPECIFICATIONS / EQUIVALENT	MANUF.
	IC..106	50.09.0113	HA-5114		Ha
	IC..201	50.07.0024	4052 B		Mot,Ph,SGS,Tho
	IC..202	50.09.0117	MC 3307B P		Mot
	IC..203	50.09.0117	MC 3307B P		Mot
	IC..205	50.07.0051	4051 B		Mot,Ph,RCA,SGS,Tho,To
	L...101	62.02.3331	330 uH	10%, note 1	TDK
	L...102	62.02.3331	330 uH	10%, note 1	TDK
	L...103	62.02.3101	100 uH	10%, note 2	TDK
	L...201	62.02.3331	330 uH	10%, note 1	TDK
	L...202	62.02.3331	330 uH	10%, note 1	TDK
	L...203	62.02.3101	100 uH	10%, note 2	TDK
	P.....1	1.010.019.54	Connector	6 pos	St
	P.....2	1.010.019.54	Connector	18 pos	St
	R...101	57.11.3751	750 Ohm	1%, MF	
	R...102	57.11.3272	2.7 kOhm	1%, MF	
	R...103	57.11.3122	1.2 kOhm	1%, MF	
	R...104	57.11.3302	3.0 kOhm	1%, MF	
	R...105	57.11.3103	10 kOhm	1%, MF	
	R...106	57.11.3472	4.7 kOhm	1%, MF	
	R...107	57.11.3821	820 Ohm	1%, MF	
	R...109	57.11.3473	47 kOhm	1%, MF	
	R...110	57.11.3103	10 kOhm	1%, MF	
	R...111	57.11.3151	150 Ohm	1%, MF	
	R...112	57.11.3332	3.3 kOhm	1%, MF	
	R...113	57.11.3182	1.8 kOhm	1%, MF	
	R...114	57.11.3512	5.1 kOhm	1%, MF	
	R...115	57.11.3202	2.0 kOhm	1%, MF	
	R...116	57.11.3151	150 Ohm	1%, MF	
	R...117	57.11.3560	56 Ohm	1%, MF	
	R...118	57.11.3560	56 Ohm	1%, MF	
	R...119	57.11.3560	56 Ohm	1%, MF	
	R...120	57.11.3560	56 Ohm	1%, MF	
	R...121	57.11.3560	56 Ohm	1%, MF	
	R...122	57.11.3560	56 Ohm	1%, MF	

IND.	POS.NO.	PART NO.	VALUE	SPECIFICATIONS / EQUIVALENT	MANUF.
	R...123	57.11.3560	56 Ohm	1%, MF	
	R...124	57.11.3202	2.0 kOhm	1%, MF	
	R...125	57.11.3223	22 kOhm	1%, MF	
	R...126	57.11.3222	2.2 kOhm	1%, MF	
	R...127	57.11.3223	22 kOhm	1%, MF	
	R...128	57.11.3332	3.3 kOhm	1%, MF	
	R...201	57.11.3751	750 Ohm	1%, MF	
	R...202	57.11.3272	2.7 kOhm	1%, MF	
	R...203	57.11.3122	1.2 kOhm	1%, MF	
	R...204	57.11.3302	3.0 kOhm	1%, MF	
	R...205	57.11.3103	10 kOhm	1%, MF	
	R...206	57.11.3472	4.7 kOhm	1%, MF	
	R...207	57.11.3821	820 Ohm	1%, MF	
	R...209	57.11.3473	47 kOhm	1%, MF	
	R...210	57.11.3103	10 kOhm	1%, MF	
	R...211	57.11.3151	150 Ohm	1%, MF	
	R...212	57.11.3332	3.3 kOhm	1%, MF	
	R...213	57.11.3182	1.8 kOhm	1%, MF	
	R...214	57.11.3512	5.1 kOhm	1%, MF	
	R...215	57.11.3202	2.0 kOhm	1%, MF	
	R...216	57.11.3151	150 Ohm	1%, MF	
	R...217	57.11.3560	56 Ohm	1%, MF	
	R...218	57.11.3560	56 Ohm	1%, MF	
	R...219	57.11.3560	56 Ohm	1%, MF	
	R...220	57.11.3560	56 Ohm	1%, MF	
	R...221	57.11.3560	56 Ohm	1%, MF	
	R...222	57.11.3560	56 Ohm	1%, MF	
	R...223	57.11.3560	56 Ohm	1%, MF	
	R...224	57.11.3202	2.0 kOhm	1%, MF	
	R...225	57.11.3223	22 kOhm	1%, MF	
	R...226	57.11.3222	2.2 kOhm	1%, MF	
	R...227	57.11.3223	22 kOhm	1%, MF	
	R...228	57.11.3332	3.3 kOhm	1%, MF	

Note 1: TDK order number: EL 0606 5KI - 331 K

Note 2: TDK order number: EL 0606 5KI - 101 K

Cer=Ceramic, El=Electrolytic, MF=Metalfilm, PETP=Polyesterfilm

Manufacturers: Ha=Harris, ITT=Intermetall, Mot=Motorola,
Ph=Philips, RCA=Radio Corporation of America,
SGS=SGS/Ates, St=Studer, Tf=Telefunken
Tho=Thomson, To=Toshiba

ORIG 89/05/19

PREAMPLIFIER POWER SUPPLY 1.862.743.00

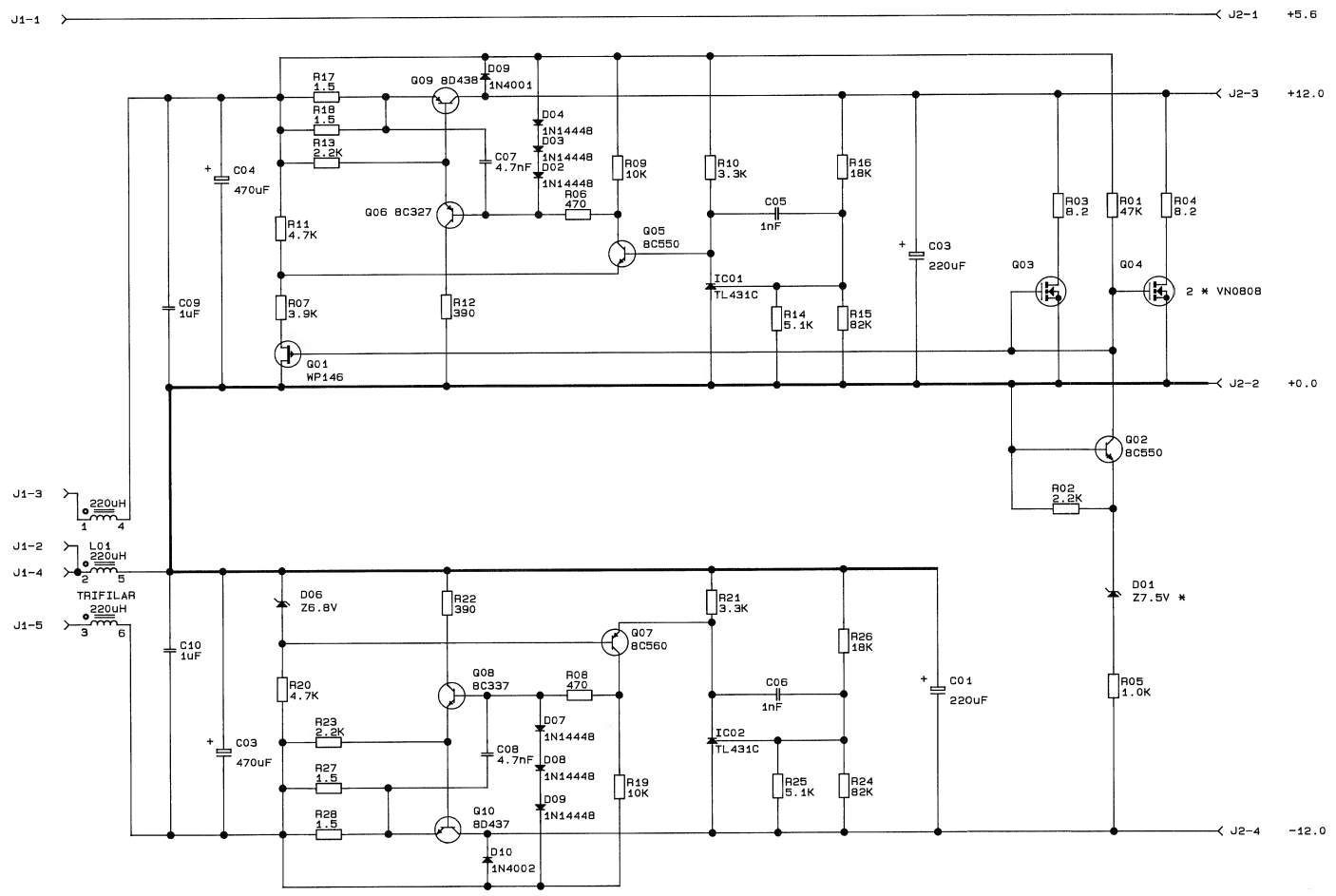

* New Adaptation of Supply Votage Margin

0 25.4.89 IVA	1 12.12.89 BBT		PAGE 1 OF 1
	D820 MCH PCM		
STUDER	PREAMPLIFIER POWER SUPPLY	SC	1.862.743.00

PREAMPLIFIER POWER SUPPLY 1.862.743.00

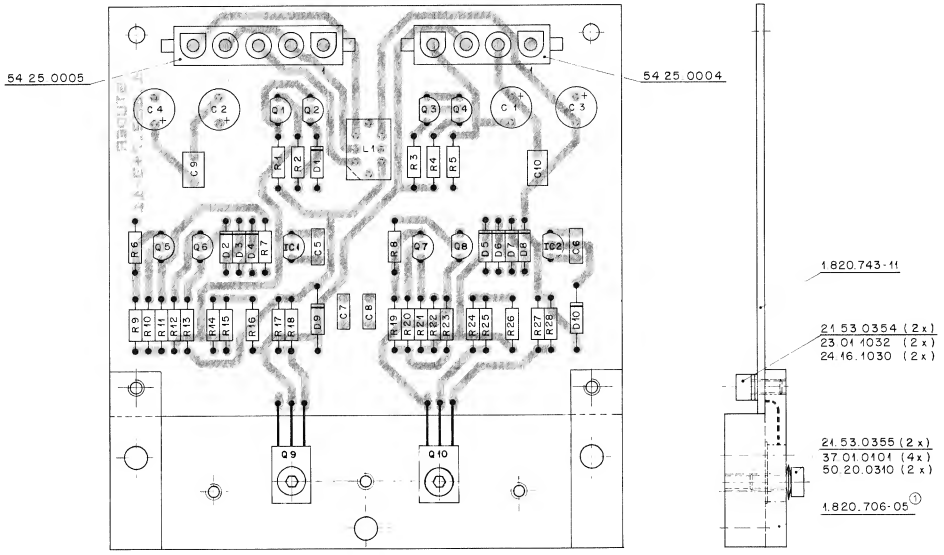

Q9 und Q10 Montage nach BV 632

ESE Schild 43.01.0108 und
Nr Etikette 1.820.743-01
aufgeklebt nach Fabrikationsmuster.

IND.	POS.NO.	PART NO.	VALUE	SPECIFICATIONS / EQUIVALENT	MANUF.
	C.....1	59.25.5221	220 uF	-20%, 16V , El	
	C.....2	59.25.5221	220 uF	-20%, 16V , El	
	C.....3	59.25.6471	470 uF	-20%, 16V , El	
	C.....4	59.25.6471	470 uF	-20%, 16V , El	
	C.....5	59.06.0102	1 nF	10%, 16V , PETP	
	C.....6	59.06.0102	1 nF	10%, 16V , PETP	
	C.....7	59.06.0472	4,7 nF	10%, 16V , PETP	
	C.....8	59.06.0472	4,7 nF	10%, 16V , PETP	
	C.....9	59.06.0105	1 uF	10%, 16V , PETP	
	C.....10	59.06.0105	1 uF	10%, 16V , PETP	
(00)	D.....1	50.04.1114	10 V Z	BZX 55 C10	ITT,Mot,Ph,Tf,SGS,Tho
(01)	D.....1	50.04.1103	7.5 V Z	BZX 55 C7V5	ITT,Mot,Ph,Tf,SGS,Tho
	D.....2	50.04.0125	1N 4448		Fe,ITT,Ph,SZS,Tf
	D.....3	50.04.0125	1N 4448		Fe,ITT,Ph,SZS,Tf
	D.....4	50.04.0125	1N 4448		Fe,ITT,Ph,SZS,Tf
	D.....5	50.04.1102	6.8 V Z	BZX 55 C6V8	ITT,Mot,Ph,Tf,SGS,Tho
	D.....6	50.04.0125	1N 4448		Fe,ITT,Ph,SZS,Tf
	D.....7	50.04.0125	1N 4448		Fe,ITT,Ph,SZS,Tf
	D.....8	50.04.0125	1N 4448		Fe,ITT,Ph,SZS,Tf
	D.....9	50.04.0122	1N 4001		GI,Mot,ITT
	D.....10	50.04.0122	1N 4001		GI,Mot,ITT
	IC....1	50.10.0106	TL 431 CLP		Mot, TI
	IC....2	50.10.0106	TL 431 CLP		Mot, TI
	L.....1	1.022.630.00	Trifilar	Common Mode Chocke	St
	Q.....1	50.03.0329	WF 146		Six
	Q.....2	50.03.0497	BC 550 E		Sie
	Q.....3	50.03.1505	VN 0808 M	ZVN 0108 A, VN 0808 MTR	Fs, Six
	Q.....4	50.03.1505	VN 0808 M	ZVN 0108 A, VN 0808 MTR	Fs, Six
	Q.....5	50.03.0497	BC 550 E		Sie
	Q.....6	50.03.0351	BC 327-25		ITT,Ph,Sie
	Q.....7	50.03.0496	BC 560 E		Sie
	Q.....8	50.03.0340	BC 337-25		ITT,NS,Ph,Sie
	Q.....9	50.03.0751	BD 178-10	BD 438	Mot, Ph

IND.	POS.NO.	PART NO.	VALUE	SPECIFICATIONS / EQUIVALENT	MANUF.
	Q.....10	50.03.0493	BD 437	BD 439	Mot, Ph
	R.....1	57.11.3473	47 kOhm	5%	
	R.....2	57.11.3222	2.2 kOhm	5%	
	R.....3	57.11.3829	8.2 Ohm	5%	
	R.....4	57.11.3829	8.2 Ohm	5%	
	R.....5	57.11.3102	1 kOhm	5%	
	R.....6	57.11.3471	470 Ohm	5%	
	R.....7	57.11.3392	3.9 kOhm	5%	
	R.....8	57.11.3471	470 Ohm	5%	
	R.....9	57.11.3103	10 kOhm	5%	
	R....10	57.11.3332	3.3 kOhm	5%	
	R....11	57.11.3472	4.7 kOhm	5%	
	R....12	57.11.3391	390 Ohm	5%	
	R....13	57.11.3222	2.2 kOhm	5%	
	R....14	57.11.3512	5.1 kOhm	1%	
	R....15	57.11.3823	82 kOhm	2%	
	R....16	57.11.3183	18 kOhm	1%	
	R....17	57.11.3159	1.5 Ohm	2%	
	R....18	57.11.3159	1.5 Ohm	2%	
	R....19	57.11.3103	10 kOhm	5%	
	R....20	57.11.3472	4.7 kOhm	5%	
	R....21	57.11.3332	3.3 kOhm	5%	
	R....22	57.11.3391	390 Ohm	5%	
	R....23	57.11.3222	2.2 kOhm	5%	
	R....24	57.11.3823	82 kOhm	2%	
	R....25	57.11.3512	5.1 kOhm	1%	
	R....26	57.11.3183	18 kOhm	1%	
	R....27	57.11.3159	1.5 Ohm	2%	
	R....28	57.11.3159	1.5 Ohm	2%	

IND.	POS.NO.	PART NO.	VALUE	SPECIFICATIONS / EQUIVALENT	MANUF.

(01) 12.12.89 New adaptation of supply voltage margin.

El=Electrolytic, PETP=Polyesterfilm.

MANUFACTURER: Fe=Ferranti, Fc=Fairchild, GI=General Instruments,
ITT=Intermetall, Mot=Motorola, NS=National Semiconductors,
Ph=Philips, SZS=Semicoxs, SGS=SGS/Ates, Sie=Siemens,
Six=Siliconix, St=Studer, Tf=Telefunken, Tho=Thomson,
TI=Texas Instruments.

ORIG 88/11/30 (01) 89/12/12

PREAMPLIFIER PCM 1 CH 1.862.749.00

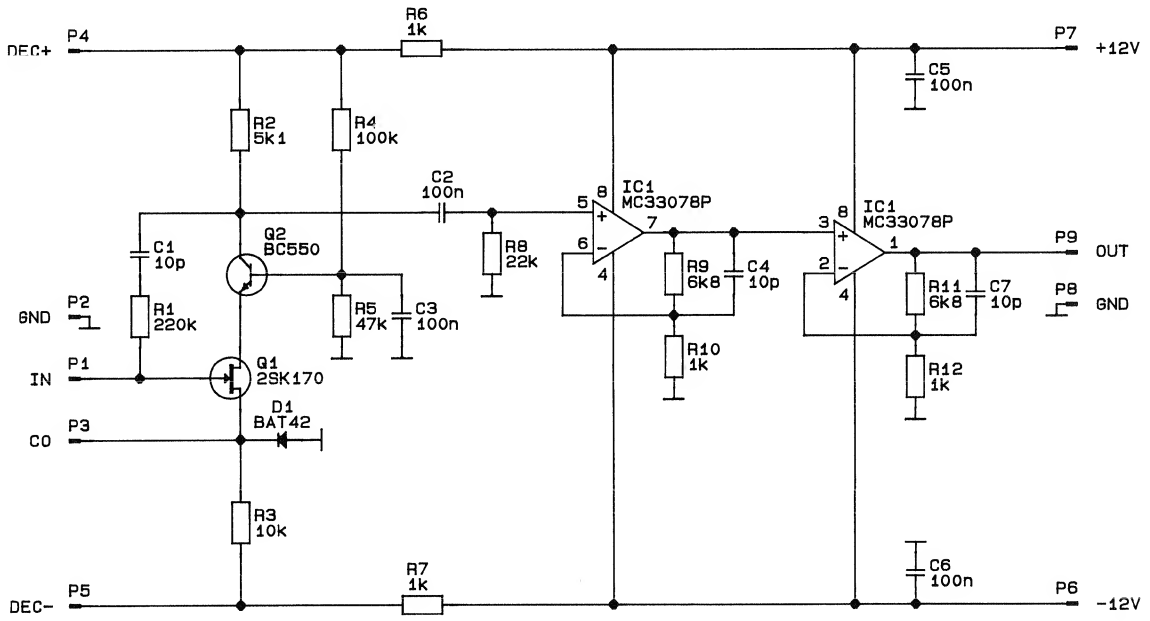

© 06.10.89 ZB				
	D 820 MCH			PAGE 1 OF 1
STUDER	PREAMPLIFIER PCM, 1 CH		SC	1.862.749.00

PREAMPLIFIER PCM 1 CH 1.862.749.00

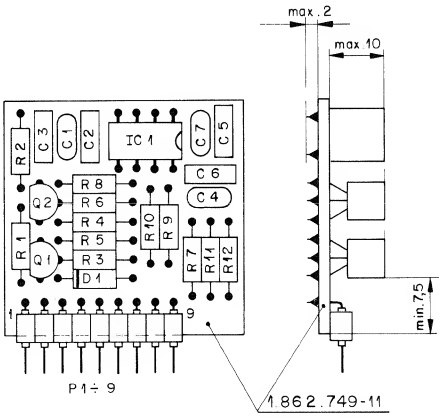

Schild 43.01.0108
aufgeklebt nach Fabrikationsmuster.

IND.	POS.NO.	PART NO.	VALUE	SPECIFICATIONS / EQUIVALENT	MANUF.
	C.....1	59.34.1100	10 pF	10%, 25V, CER	
	C.....2	59.06.0104	100 nF	10%, 25V, PETP	
	C.....3	59.06.0104	100 nF	10%, 25V, PETP	
	C.....4	59.34.1100	10 pF	5%, 25V, CER	
	C.....5	59.06.0104	100 nF	10%, 25V, PETP	
	C.....6	59.06.0104	100 nF	10%, 25V, PETP	
	C.....7	59.34.1100	10 pF	5%, 25V, CER	
	D.....1	50.04.0127	BAT 85	BAT 42, BAS 40-02	
	IC....1	50.09.0117	MC 33078	OPA	Mot
	P.....1	53.03.0250		right angle, SMC 032 GH F BB	Prc
	P.....2	53.03.0250		right angle, SMC 032 GH F BB	Prc
	P.....3	53.03.0250		right angle, SMC 032 GH F BB	Prc
	P.....4	53.03.0250		right angle, SMC 032 GH F BB	Prc
	P.....5	53.03.0250		right angle, SMC 032 GH F BB	Prc
	P.....6	53.03.0250		right angle, SMC 032 GH F BB	Prc
	P.....7	53.03.0250		right angle, SMC 032 GH F BB	Prc
	P.....8	53.03.0250		right angle, SMC 032 GH F BB	Prc
	P.....9	53.03.0250		right angle, SMC 032 GH F BB	Prc
	Q.....1	50.03.0215	2 SK 170	N-JFET, low noise	To
	Q.....2	50.03.0497	BC 550	NPN	Mot, Ph, Sie
	R.....1	57.11.3224	220 kOhm	2%,MF	
	R.....2	57.11.3512	5.1 kOhm	2%,MF	
	R.....3	57.11.3103	10 kOhm	2%,MF	
	R.....4	57.11.3104	100 kOhm	2%,MF	
	R.....5	57.11.3473	47 kOhm	2%,MF	
	R.....6	57.11.3102	1 kOhm	2%,MF	
	R.....7	57.11.3102	1 kOhm	2%,MF	
	R.....8	57.11.3223	22 kOhm	2%,MF	
	R.....9	57.11.3682	6.8 kOhm	2%,MF	
	R....10	57.11.3102	1 kOhm	2%,MF	
	R....11	57.11.3682	6.8 kOhm	2%,MF	
	R....12	57.11.3102	1 kOhm	2%,MF	

S T U D E R (00) 89/04/20 ZB PREAMPLIFIER PCM, 1 CH PL 1.862.749.00 PAGE 1

CER=Ceramic, PETP=Polyesterfilm, MF=Metalfilm

MANUFACTURER: Mot=Motorola, Ph=Philips, Prc=Precicontact, Sie=Siemens
To=Toshiba

ORIG 89/04/20

S T U D E R (00) 89/04/20 ZB PREAMPLIFIER PCM, 1 CH PL 1.862.749.00 PAGE 2

PREAMPLIFIER CUE 1 CH 1.862.750.00

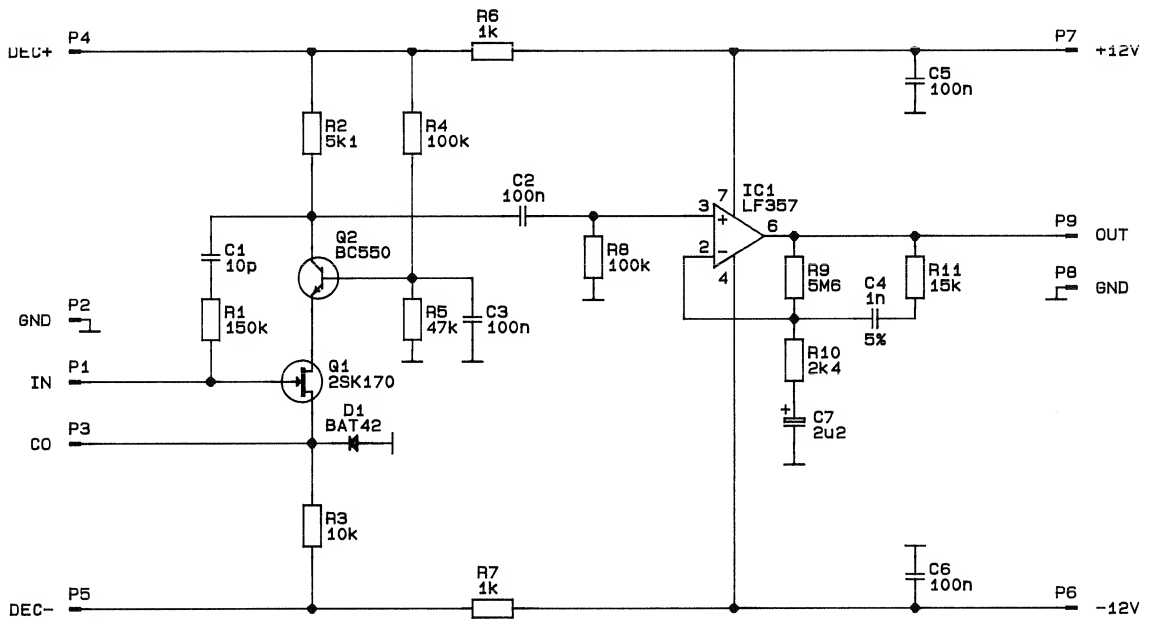

06.10.89 ZB				
	D 820 MCH			PAGE 1 OF 1
STUDER	PREAMPLIFIER CUE, 1 CH		SC	1.862.750.00

PREAMPLIFIER CUE 1 CH 1.862.750.00

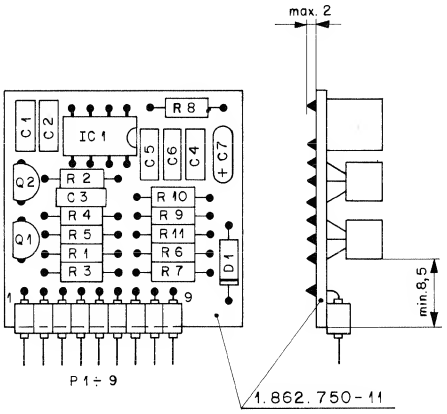

Schild 43.01.0108
aufgeklebt nach Fabrikationsmuster.

IND.	POS.NO.	PART NO.	VALUE	SPECIFICATIONS / EQUIVALENT	MANUF.
	C.....1	59.34.1100	10 pF	10%, 25V, CER	
	C.....2	59.06.0104	100 nF	10%, 25V, PETP	
	C.....3	59.06.0104	100 nF	10%, 25V, PETP	
	C.....4	59.06.5102	1 nF	5%, 25V, PETP	
	C.....5	59.06.0104	100 nF	10%, 25V, PETP	
	C.....6	59.06.0104	100 nF	10%, 25V, PETP	
	C.....7	59.26.5229	2.2 uF	20%, 25V, SAL	Ph
	D.....1	50.04.0127	BAT 85	BAT 42	Ph,SGS,Th
	IC....1	50.09.0102	LF 357 N	OPA	NS
	P.....1	53.03.0250	connector	right angle	
	P.....2	53.03.0250	connector	right angle	
	P.....3	53.03.0250	connector	right angle	
	P.....4	53.03.0250	connector	right angle	
	P.....5	53.03.0250	connector	right angle	
	P.....6	53.03.0250	connector	right angle	
	P.....7	53.03.0250	connector	right angle	
	P.....8	53.03.0250	connector	right angle	
	P.....9	53.03.0250	connector	right angle	
	Q.....1	50.03.0215	2 SK 170	N-JFET, low noise	To
	Q.....2	50.03.0497	BC 550	E 6328, NPN	Sie
	R.....1	57.11.3154	150 kOhm	2%, MF	
	R.....2	57.11.3512	5.1 kOhm	2%, MF	
	R.....3	57.11.3103	10 kOhm	2%, MF	
	R.....4	57.11.3104	100 kOhm	2%, MF	
	R.....5	57.11.3473	47 kOhm	2%, MF	
	R.....6	57.11.3102	1 kOhm	2%, MF	
	R.....7	57.11.3102	1 kOhm	2%, MF	
	R.....8	57.11.3104	100 kOhm	2%, MF	
	R.....9	57.11.5565	5.6 MOhm	5%, MF	
	R....10	57.11.3242	2.4 kOhm	2%, MF	
	R....11	57.11.3153	15 kOhm	2%, MF	

S T U D E R (00) 89/06/02 ZB PREAMPLIFIER CUE, 1 CH PL 1.862.750.00 PAGE 1

CER=Ceramic, MF=Metalfilm, PETP=Polyesterfilm, SAL=Solid Aluminium

Manufacturers: NS=National Semiconductors, Ph=Philips, SGS=SGS/Ates
Sie=Siemens, Th=Thomson, To=Toshiba

ORIG 89/06/02

S T U D E R (00) 89/06/02 ZB PREAMPLIFIER CUE, 1 CH PL 1.862.750.00 PAGE 2

JUNCTION BOARD SYNC RECORD 48 CH 1.862.751.00

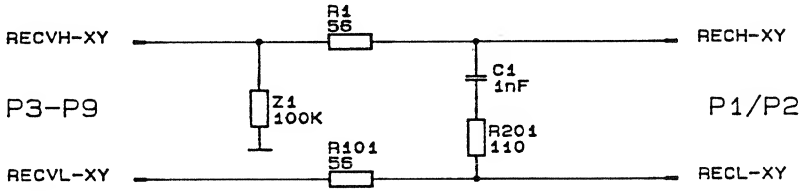

CH1	R1	R101	R201	C1
...	...	...	...	...
CH48	R48	R148	R248	C48
RT	R49	R149	R249	C49
TC	R50	R150	R250	C50
CU1	R51	R151	R251	C51
CU2	R52	R152	R252	C52

© 18.5.89 IVA				
	BAUGRUPPE			PAGE 1 OF1
STUDER	JUNCTION BOARD REC 48 CH		SC	1.862.751.00

JUNCTION BOARD SYNC RECORD 48 CH 1.862.751.00

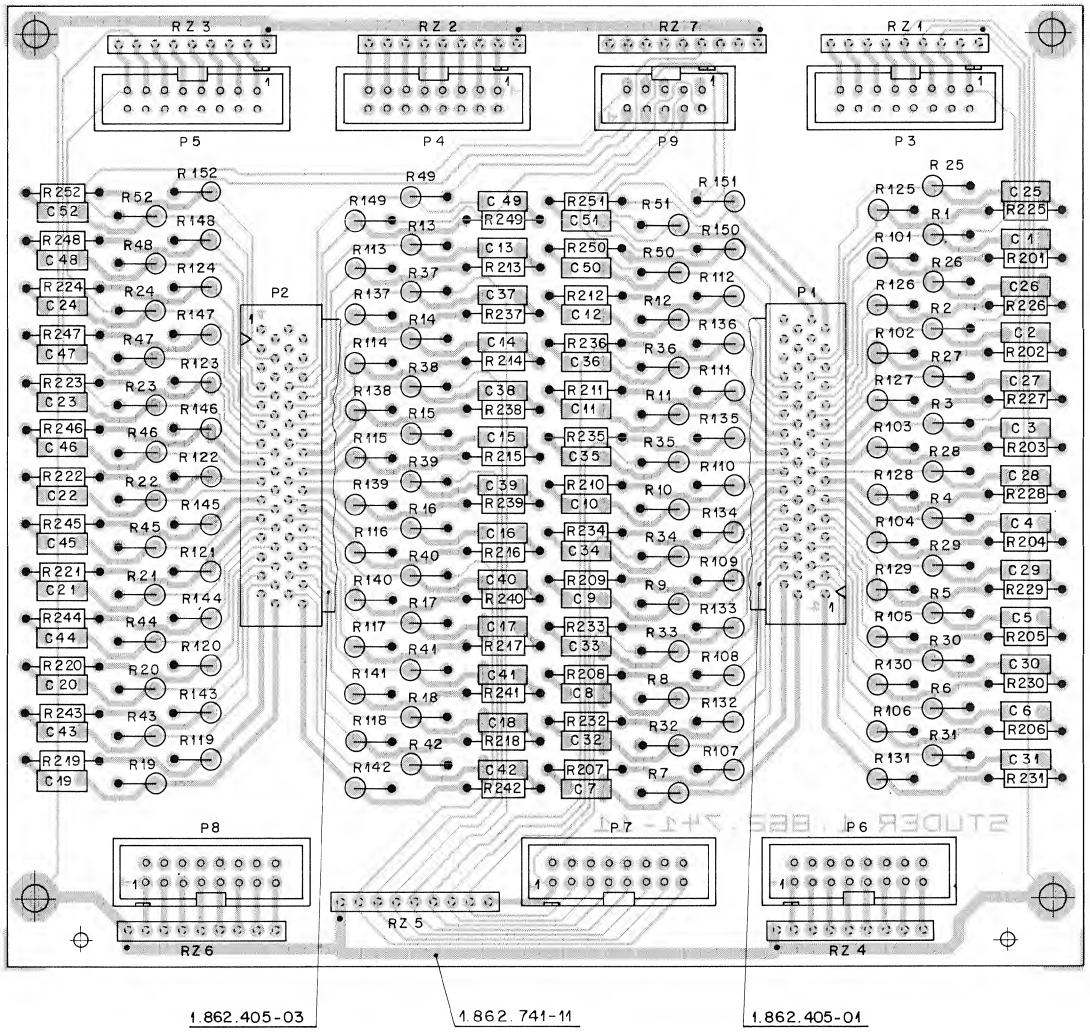

IND.	POS.NO.	PART NO.	VALUE	SPECIFICATIONS / EQUIVALENT	MANUF.
	C.....1	59.40.0102	1 nF	10%, 63V , PETP	
	C.....2	59.40.0102	1 nF	10%, 63V , PETP	
	C.....3	59.40.0102	1 nF	10%, 63V , PETP	
	C.....4	59.40.0102	1 nF	10%, 63V , PETP	
	C.....5	59.40.0102	1 nF	10%, 63V , PETP	
	C.....6	59.40.0102	1 nF	10%, 63V , PETP	
	C.....7	59.40.0102	1 nF	10%, 63V , PETP	
	C.....8	59.40.0102	1 nF	10%, 63V , PETP	
	C.....9	59.40.0102	1 nF	10%, 63V , PETP	
	C....10	59.40.0102	1 nF	10%, 63V , PETP	
	C....11	59.40.0102	1 nF	10%, 63V , PETP	
	C....12	59.40.0102	1 nF	10%, 63V , PETP	
	C....13	59.40.0102	1 nF	10%, 63V , PETP	
	C....14	59.40.0102	1 nF	10%, 63V , PETP	
	C....15	59.40.0102	1 nF	10%, 63V , PETP	
	C....16	59.40.0102	1 nF	10%, 63V , PETP	
	C....17	59.40.0102	1 nF	10%, 63V , PETP	
	C....18	59.40.0102	1 nF	10%, 63V , PETP	
	C....19	59.40.0102	1 nF	10%, 63V , PETP	
	C....20	59.40.0102	1 nF	10%, 63V , PETP	
	C....21	59.40.0102	1 nF	10%, 63V , PETP	
	C....22	59.40.0102	1 nF	10%, 63V , PETP	
	C....23	59.40.0102	1 nF	10%, 63V , PETP	
	C....24	59.40.0102	1 nF	10%, 63V , PETP	
	C....25	59.40.0102	1 nF	10%, 63V , PETP	
	C....26	59.40.0102	1 nF	10%, 63V , PETP	
	C....27	59.40.0102	1 nF	10%, 63V , PETP	
	C....28	59.40.0102	1 nF	10%, 63V , PETP	
	C....29	59.40.0102	1 nF	10%, 63V , PETP	
	C....30	59.40.0102	1 nF	10%, 63V , PETP	
	C....31	59.40.0102	1 nF	10%, 63V , PETP	
	C....32	59.40.0102	1 nF	10%, 63V , PETP	
	C....33	59.40.0102	1 nF	10%, 63V , PETP	
	C....34	59.40.0102	1 nF	10%, 63V , PETP	
	C....35	59.40.0102	1 nF	10%, 63V , PETP	
	C....36	59.40.0102	1 nF	10%, 63V , PETP	
	C....37	59.40.0102	1 nF	10%, 63V , PETP	

S T U D E R (00) 89/05/09 IVA JUNCTION BOARD SYNC REC. 48 CH PL 1.862.751.00 PAGE 1

IND.	POS.NO.	PART NO.	VALUE	SPECIFICATIONS / EQUIVALENT	MANUF.
	C....38	59.40.0102	1 nF	10%, 63V , PETP	
	C....39	59.40.0102	1 nF	10%, 63V , PETP	
	C....40	59.40.0102	1 nF	10%, 63V , PETP	
	C....41	59.40.0102	1 nF	10%, 63V , PETP	
	C....42	59.40.0102	1 nF	10%, 63V , PETP	
	C....43	59.40.0102	1 nF	10%, 63V , PETP	
	C....44	59.40.0102	1 nF	10%, 63V , PETP	
	C....45	59.40.0102	1 nF	10%, 63V , PETP	
	C....46	59.40.0102	1 nF	10%, 63V , PETP	
	C....47	59.40.0102	1 nF	10%, 63V , PETP	
	C....48	59.40.0102	1 nF	10%, 63V , PETP	
	C....49	59.40.0102	1 nF	10%, 63V , PETP	
	C....50	59.40.0102	1 nF	10%, 63V , PETP	
	C....51	59.40.0102	1 nF	10%, 63V , PETP	
	C....52	59.40.0102	1 nF	10%, 63V , PETP	
	P.....1	1.862.405.01	Cable	60 Contacts, Flat Cable	
	P.....2	1.862.405.03	Cable	60 Contacts, Flat Cable	
	P.....3	54.14.2002	Connector	16 Contacts, Flat Cable	
	P.....4	54.14.2002	Connector	16 Contacts, Flat Cable	
	P.....5	54.14.2002	Connector	16 Contacts, Flat Cable	
	P.....6	54.14.2002	Connector	16 Contacts, Flat Cable	
	P.....7	54.14.2002	Connector	16 Contacts, Flat Cable	
	P.....8	54.14.2002	Connector	16 Contacts, Flat Cable	
	P.....9	54.14.2001	Connector	10 Contacts, Flat Cable	
	R.....1	57.99.1800	56 Ohm	2%, .5 W,VERT.	
	R.....2	57.99.1800	56 Ohm	2%, .5 W,VERT.	
	R.....3	57.99.1800	56 Ohm	2%, .5 W,VERT.	
	R.....4	57.99.1800	56 Ohm	2%, .5 W,VERT.	
	R.....5	57.99.1800	56 Ohm	2%, .5 W,VERT.	
	R.....6	57.99.1800	56 Ohm	2%, .5 W,VERT.	
	R.....7	57.99.1800	56 Ohm	2%, .5 W,VERT.	
	R.....8	57.99.1800	56 Ohm	2%, .5 W,VERT.	
	R.....9	57.99.1800	56 Ohm	2%, .5 W,VERT.	
	R....10	57.99.1800	56 Ohm	2%, .5 W,VERT.	
	R....11	57.99.1800	56 Ohm	2%, .5 W,VERT.	

S T U D E R (00) 89/05/09 IVA JUNCTION BOARD SYNC REC. 48 CH PL 1.862.751.00 PAGE 2

JUNCTION BOARD SYNC RECORD 48 CH 1.862.751.00

IND.	POS.NO.	PART NO.	VALUE	SPECIFICATIONS / EQUIVALENT	MANUF.
	R....12	57.99.1800	56 Ohm	2%, .5 W,VERT.	
	R....13	57.99.1800	56 Ohm	2%, .5 W,VERT.	
	R....14	57.99.1800	56 Ohm	2%, .5 W,VERT.	
	R....15	57.99.1800	56 Ohm	2%, .5 W,VERT.	
	R....16	57.99.1800	56 Ohm	2%, .5 W,VERT.	
	R....17	57.99.1800	56 Ohm	2%, .5 W,VERT.	
	R....18	57.99.1800	56 Ohm	2%, .5 W,VERT.	
	R....19	57.99.1800	56 Ohm	2%, .5 W,VERT.	
	R....20	57.99.1800	56 Ohm	2%, .5 W,VERT.	
	R....21	57.99.1800	56 Ohm	2%, .5 W,VERT.	
	R....22	57.99.1800	56 Ohm	2%, .5 W,VERT.	
	R....23	57.99.1800	56 Ohm	2%, .5 W,VERT.	
	R....24	57.99.1800	56 Ohm	2%, .5 W,VERT.	
	R....25	57.99.1800	56 Ohm	2%, .5 W,VERT.	
	R....26	57.99.1800	56 Ohm	2%, .5 W,VERT.	
	R....27	57.99.1800	56 Ohm	2%, .5 W,VERT.	
	R....28	57.99.1800	56 Ohm	2%, .5 W,VERT.	
	R....29	57.99.1800	56 Ohm	2%, .5 W,VERT.	
	R....30	57.99.1800	56 Ohm	2%, .5 W,VERT.	
	R....31	57.99.1800	56 Ohm	2%, .5 W,VERT.	
	R....32	57.99.1800	56 Ohm	2%, .5 W,VERT.	
	R....33	57.99.1800	56 Ohm	2%, .5 W,VERT.	
	R....34	57.99.1800	56 Ohm	2%, .5 W,VERT.	
	R....35	57.99.1800	56 Ohm	2%, .5 W,VERT.	
	R....36	57.99.1800	56 Ohm	2%, .5 W,VERT.	
	R....37	57.99.1800	56 Ohm	2%, .5 W,VERT.	
	R....38	57.99.1800	56 Ohm	2%, .5 W,VERT.	
	R....39	57.99.1800	56 Ohm	2%, .5 W,VERT.	
	R....40	57.99.1800	56 Ohm	2%, .5 W,VERT.	
	R....41	57.99.1800	56 Ohm	2%, .5 W,VERT.	
	R....42	57.99.1800	56 Ohm	2%, .5 W,VERT.	
	R....43	57.99.1800	56 Ohm	2%, .5 W,VERT.	
	R....44	57.99.1800	56 Ohm	2%, .5 W,VERT.	
	R....45	57.99.1800	56 Ohm	2%, .5 W,VERT.	
	R....46	57.99.1800	56 Ohm	2%, .5 W,VERT.	
	R....47	57.99.1800	56 Ohm	2%, .5 W,VERT.	
	R....48	57.99.1800	56 Ohm	2%, .5 W,VERT.	

S T U D E R (00) 89/05/09 IVA JUNCTION BOARD SYNC REC. 48 CH PL 1.862.751.00 PAGE 3

IND.	POS.NO.	PART NO.	VALUE	SPECIFICATIONS / EQUIVALENT	MANUF.
	R....49	57.99.1800	56 Ohm	2%, .5 W,VERT.	
	R....50	57.99.1800	56 Ohm	2%, .5 W,VERT.	
	R....51	57.99.1800	56 Ohm	2%, .5 W,VERT.	
	R....52	57.99.1800	56 Ohm	2%, .5 W,VERT.	
	R...101	57.99.1800	56 Ohm	2%, .5 W,VERT.	
	R...102	57.99.1800	56 Ohm	2%, .5 W,VERT.	
	R...103	57.99.1800	56 Ohm	2%, .5 W,VERT.	
	R...104	57.99.1800	56 Ohm	2%, .5 W,VERT.	
	R...105	57.99.1800	56 Ohm	2%, .5 W,VERT.	
	R...106	57.99.1800	56 Ohm	2%, .5 W,VERT.	
	R...107	57.99.1800	56 Ohm	2%, .5 W,VERT.	
	R...108	57.99.1800	56 Ohm	2%, .5 W,VERT.	
	R...109	57.99.1800	56 Ohm	2%, .5 W,VERT.	
	R...110	57.99.1800	56 Ohm	2%, .5 W,VERT.	
	R...111	57.99.1800	56 Ohm	2%, .5 W,VERT.	
	R...112	57.99.1800	56 Ohm	2%, .5 W,VERT.	
	R...113	57.99.1800	56 Ohm	2%, .5 W,VERT.	
	R...114	57.99.1800	56 Ohm	2%, .5 W,VERT.	
	R...115	57.99.1800	56 Ohm	2%, .5 W,VERT.	
	R...116	57.99.1800	56 Ohm	2%, .5 W,VERT.	
	R...117	57.99.1800	56 Ohm	2%, .5 W,VERT.	
	R...118	57.99.1800	56 Ohm	2%, .5 W,VERT.	
	R...119	57.99.1800	56 Ohm	2%, .5 W,VERT.	
	R...120	57.99.1800	56 Ohm	2%, .5 W,VERT.	
	R...121	57.99.1800	56 Ohm	2%, .5 W,VERT.	
	R...122	57.99.1800	56 Ohm	2%, .5 W,VERT.	
	R...123	57.99.1800	56 Ohm	2%, .5 W,VERT.	
	R...124	57.99.1800	56 Ohm	2%, .5 W,VERT.	
	R...125	57.99.1800	56 Ohm	2%, .5 W,VERT.	
	R...126	57.99.1800	56 Ohm	2%, .5 W,VERT.	
	R...127	57.99.1800	56 Ohm	2%, .5 W,VERT.	
	R...128	57.99.1800	56 Ohm	2%, .5 W,VERT.	
	R...129	57.99.1800	56 Ohm	2%, .5 W,VERT.	
	R...130	57.99.1800	56 Ohm	2%, .5 W,VERT.	
	R...131	57.99.1800	56 Ohm	2%, .5 W,VERT.	
	R...132	57.99.1800	56 Ohm	2%, .5 W,VERT.	
	R...133	57.99.1800	56 Ohm	2%, .5 W,VERT.	

S T U D E R (00) 89/05/09 IVA JUNCTION BOARD SYNC REC. 48 CH PL 1.862.751.00 PAGE 4

IND.	POS.NO.	PART NO.	VALUE	SPECIFICATIONS / EQUIVALENT	MANUF.
	R...134	57.99.1800	56 Ohm	2%, .5 W,VERT.	
	R...135	57.99.1800	56 Ohm	2%, .5 W,VERT.	
	R...136	57.99.1800	56 Ohm	2%, .5 W,VERT.	
	R...137	57.99.1800	56 Ohm	2%, .5 W,VERT.	
	R...138	57.99.1800	56 Ohm	2%, .5 W,VERT.	
	R...139	57.99.1800	56 Ohm	2%, .5 W,VERT.	
	R...140	57.99.1800	56 Ohm	2%, .5 W,VERT.	
	R...141	57.99.1800	56 Ohm	2%, .5 W,VERT.	
	R...142	57.99.1800	56 Ohm	2%, .5 W,VERT.	
	R...143	57.99.1800	56 Ohm	2%, .5 W,VERT.	
	R...144	57.99.1800	56 Ohm	2%, .5 W,VERT.	
	R...145	57.99.1800	56 Ohm	2%, .5 W,VERT.	
	R...146	57.99.1800	56 Ohm	2%, .5 W,VERT.	
	R...147	57.99.1800	56 Ohm	2%, .5 W,VERT.	
	R...148	57.99.1800	56 Ohm	2%, .5 W,VERT.	
	R...149	57.99.1800	56 Ohm	2%, .5 W,VERT.	
	R...150	57.99.1800	56 Ohm	2%, .5 W,VERT.	
	R...151	57.99.1800	56 Ohm	2%, .5 W,VERT.	
	R...152	57.99.1800	56 Ohm	2%, .5 W,VERT.	
	R...201	57.11.3111	110 Ohm	1%, 0207, MF	
	R...202	57.11.3111	110 Ohm	1%, 0207, MF	
	R...203	57.11.3111	110 Ohm	1%, 0207, MF	
	R...204	57.11.3111	110 Ohm	1%, 0207, MF	
	R...205	57.11.3111	110 Ohm	1%, 0207, MF	
	R...206	57.11.3111	110 Ohm	1%, 0207, MF	
	R...207	57.11.3111	110 Ohm	1%, 0207, MF	
	R...208	57.11.3111	110 Ohm	1%, 0207, MF	
	R...209	57.11.3111	110 Ohm	1%, 0207, MF	
	R...210	57.11.3111	110 Ohm	1%, 0207, MF	
	R...211	57.11.3111	110 Ohm	1%, 0207, MF	
	R...212	57.11.3111	110 Ohm	1%, 0207, MF	
	R...213	57.11.3111	110 Ohm	1%, 0207, MF	
	R...214	57.11.3111	110 Ohm	1%, 0207, MF	
	R...215	57.11.3111	110 Ohm	1%, 0207, MF	
	R...216	57.11.3111	110 Ohm	1%, 0207, MF	
	R...217	57.11.3111	110 Ohm	1%, 0207, MF	
	R...218	57.11.3111	110 Ohm	1%, 0207, MF	

S T U D E R (00) 89/05/09 IVA JUNCTION BOARD SYNC REC. 48 CH PL 1.862.751.00 PAGE 5

IND.	POS.NO.	PART NO.	VALUE	SPECIFICATIONS / EQUIVALENT	MANUF.
	R...219	57.11.3111	110 Ohm	1%, 0207, MF	
	R...220	57.11.3111	110 Ohm	1%, 0207, MF	
	R...221	57.11.3111	110 Ohm	1%, 0207, MF	
	R...222	57.11.3111	110 Ohm	1%, 0207, MF	
	R...223	57.11.3111	110 Ohm	1%, 0207, MF	
	R...224	57.11.3111	110 Ohm	1%, 0207, MF	
	R...225	57.11.3111	110 Ohm	1%, 0207, MF	
	R...226	57.11.3111	110 Ohm	1%, 0207, MF	
	R...227	57.11.3111	110 Ohm	1%, 0207, MF	
	R...228	57.11.3111	110 Ohm	1%, 0207, MF	
	R...229	57.11.3111	110 Ohm	1%, 0207, MF	
	R...230	57.11.3111	110 Ohm	1%, 0207, MF	
	R...231	57.11.3111	110 Ohm	1%, 0207, MF	
	R...232	57.11.3111	110 Ohm	1%, 0207, MF	
	R...233	57.11.3111	110 Ohm	1%, 0207, MF	
	R...234	57.11.3111	110 Ohm	1%, 0207, MF	
	R...235	57.11.3111	110 Ohm	1%, 0207, MF	
	R...236	57.11.3111	110 Ohm	1%, 0207, MF	
	R...237	57.11.3111	110 Ohm	1%, 0207, MF	
	R...238	57.11.3111	110 Ohm	1%, 0207, MF	
	R...239	57.11.3111	110 Ohm	1%, 0207, MF	
	R...240	57.11.3111	110 Ohm	1%, 0207, MF	
	R...241	57.11.3111	110 Ohm	1%, 0207, MF	
	R...242	57.11.3111	110 Ohm	1%, 0207, MF	
	R...243	57.11.3111	110 Ohm	1%, 0207, MF	
	R...244	57.11.3111	110 Ohm	1%, 0207, MF	
	R...245	57.11.3111	110 Ohm	1%, 0207, MF	
	R...246	57.11.3111	110 Ohm	1%, 0207, MF	
	R...247	57.11.3111	110 Ohm	1%, 0207, MF	
	R...248	57.11.3111	110 Ohm	1%, 0207, MF	
	R...249	57.11.3111	110 Ohm	1%, 0207, MF	
	R...250	57.11.3111	110 Ohm	1%, 0207, MF	
	R...251	57.11.3111	110 Ohm	1%, 0207, MF	
	R...252	57.11.3111	110 Ohm	1%, 0207, MF	
	RZ....1	57.88.4104	8*100 kOhm	2%, SIP 9	
	RZ....2	57.88.4104	8*100 kOhm	2%, SIP 9	

S T U D E R (00) 89/05/09 IVA JUNCTION BOARD SYNC REC. 48 CH PL 1.862.751.00 PAGE 6

IND.	POS.NO.	PART NO.	VALUE	SPECIFICATIONS / EQUIVALENT	MANUF.
	RZ....3	57.88.4104	8*100 kOhm	2%, SIP 9	
	RZ....4	57.88.4104	8*100 kOhm	2%, SIP 9	
	RZ....5	57.88.4104	8*100 kOhm	2%, SIP 9	
	RZ....6	57.88.4104	8*100 kOhm	2%, SIP 9	
	RZ....7	57.88.4104	8*100 kOhm	2%, SIP 9	

PETP=Polyesterfilm

MANUFACTURER: Fc=Fairchild, Fe=Ferranti, Is=Intersil, ITT=Intermetall, Mot=Motorola, NS=National Semiconductors, Ph=Philips, SES=Sescosem, SGS=SGS/Ates, Sie=Siemens, Sig=Signetics, Six=Siliconix, Tf=Telefunken, Tho=Thomson, TI=Texas Instruments.

ORIG 89/05/09

S T U D E R (00) 89/05/09 IVA JUNCTION BOARD SYNC REC. 48 CH PL 1.862.751.00 PAGE 7

TACHO SENSOR ELECTRONICS 1.021.695.83

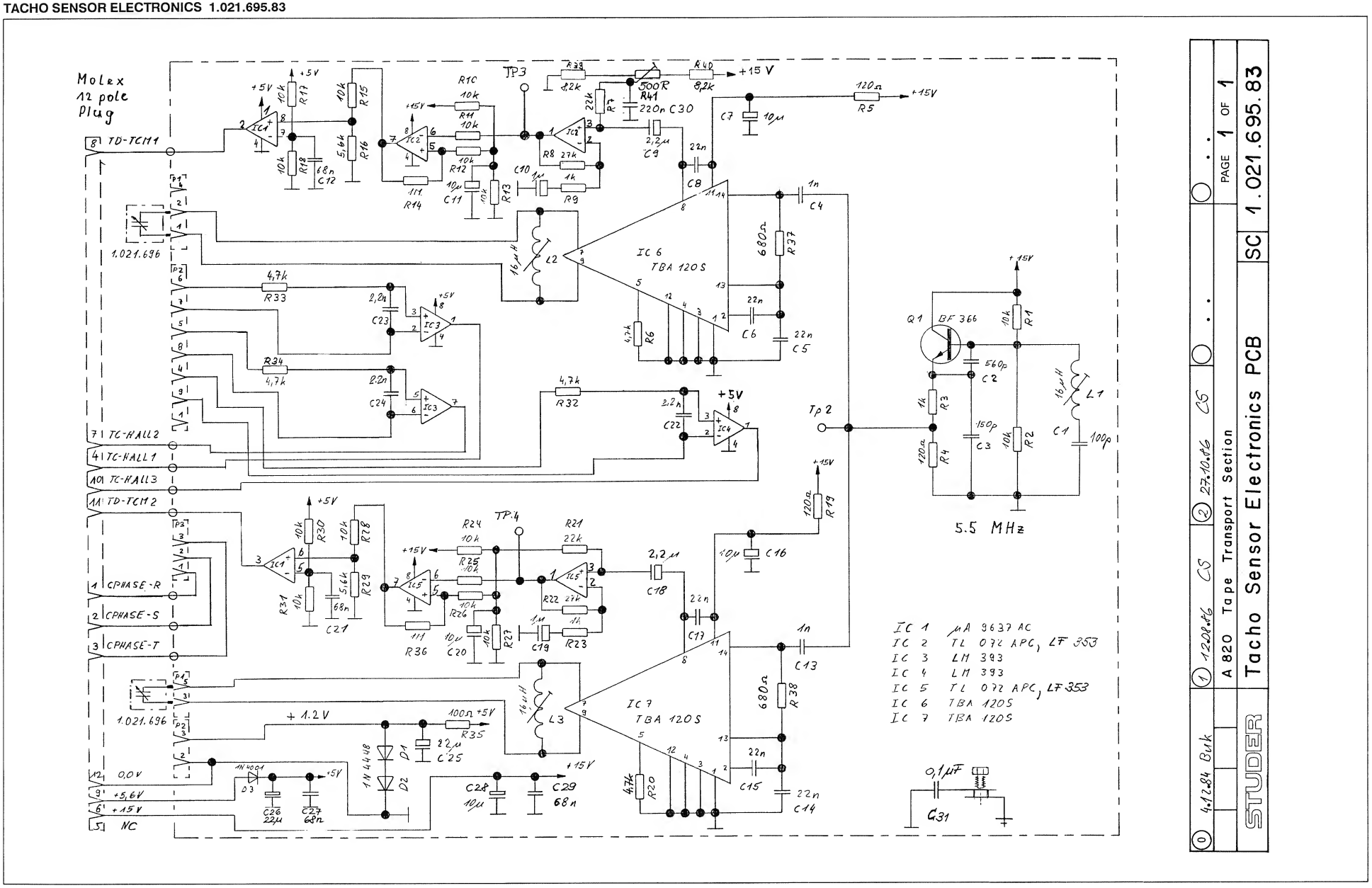

TACHO SENSOR ELECTRONICS 1.021.695.83

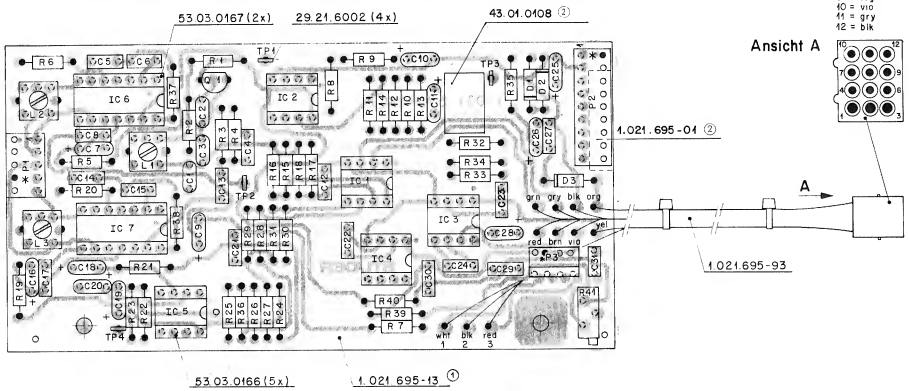

* Codierung: Schaltdraht 64.01.0108 ø 0,8 x 8mm (muss 1mm vorstehen)

① Mit der Einführung der Printplatte -13 entfallen:

- Leiterbahnaufteilung
- Isolierschlauch
- 1.022.400-03

IND.	POS.NO.	PART NO.	VALUE	SPECIFICATIONS / EQUIVALENT	MANUF.
	C.....1	59.34.4101	100 pF	5%, N750, CK	
	C.....2	59.34.5561	560 pF	5%, 63V, CK	
	C.....3	59.34.4151	150 pF	5%, N750, CK	
	C.....4	59.06.0102	1 nF	10%, 63V, PETP	
	C.....5	59.06.0223	22 nF	10%, 63V, PETP	
	C.....6	59.06.0223	22 nF	10%, 63V, PETP	
	C.....7	59.26.2100	10 uF	20%, 16V, EL	
	C.....8	59.06.0223	22 nF	10%, 63V, PETP	
	C.....9	59.26.5229	2.2 uF	20%, 25V, EL	
	C.....10	59.26.9109	1 uF	20%, 40V, EL	
	C.....11	59.26.2100	10 uF	20%, 16V, EL	
	C.....12	59.06.0683	68 nF	10%, 63V, PETP	
	C.....13	59.06.0102	1 nF	10%, 63V, PETP	
	C.....14	59.06.0223	22 nF	10%, 63V, PETP	
	C.....15	59.06.0223	22 nF	10%, 63V, PETP	
	C.....16	59.26.2100	10 uF	20%, 16V, EL	
	C.....17	59.06.0223	22 nF	10%, 63V, PETP	
	C.....18	59.26.5229	2.2 uF	20%, 25V, EL	
	C.....19	59.26.9109	1 uF	20%, 40V, EL	
	C.....20	59.26.2100	10 uF	20%, 16V, EL	
	C.....21	59.06.0683	68 nF	10%, 63V, PETP	
	C.....22	59.06.0222	2.2 nF	10%, 63V, PETP	
	C.....23	59.06.0222	2.2 nF	10%, 63V, PETP	
	C.....24	59.06.0222	2.2 nF	10%, 63V, PETP	
	C.....25	59.26.1220	22 uF	20%, 10V, EL	
	C.....26	59.26.1220	22 uF	20%, 10V, EL	
	C.....27	59.06.0683	68 nF	10%, 63V, PETP	
	C.....28	59.26.2100	10 uF	20%, 16V, EL	
	C.....29	59.06.0683	68 nF	10%, 63V, PETP	
	C.....30	59.06.0224	220 nF	10%, 63V, PETP	
	C.....31	59.06.0104	100 nF	10%, 63V, PETP	
	D.....1	50.04.0125	1N 4448		Fc,ITT,Ph,Sem,Tf
	D.....2	50.04.0125	1N 4448		Fc,ITT,Ph,Sem,Tf
	D.....3	50.04.0122	1N 4001	(te 4004)	Mot
	IC....1	50.15.0114	UA9637ACP	9637 ATC	Fc,TI

S T U D E R (00) 86/08/12 CS TACHO SENS. EL. BOARD PL 1.021.695.83 PAGE 1

IND.	POS.NO.	PART NO.	VALUE	SPECIFICATIONS / EQUIVALENT	MANUF.
	IC....2	50.09.0101	LF 353 N	TL 072 CP	NS,TI
	IC....3	50.05.0283	LM 393 N	LM 393 P	NS,TI
	IC....4	50.05.0283	LM 393 N	LM 393 P	NS,TI
	IC....5	50.09.0101	LF 353 N	TL 072 CP	NS,TI
	IC....6	50.11.0107	TBA 120S		Sie
	IC....7	50.11.0107	TBA 120S		Sie
	L.....1	1.022.222.00	16 mH	HF-COIL	St
	L.....2	1.022.222.00	16 mH	HF-COIL	St
	L.....3	1.022.222.00	16 mH	HF-COIL	St
	P.....1	54.01.0288		see Note 2	
	P.....2	54.01.0217		see Note 3	
(00)	P.....3	54.01.0287		see Note 4	
(01)	P.....3	54.01.0241		see Note 4	
	Q.....1	50.03.0514	BF 366		Mot
	R.....1	57.11.4103	10 kOhm	5%	
	R.....2	57.11.4103	10 kOhm	5%	
	R.....3	57.11.4102	1 kOhm	5%	
	R.....4	57.11.4121	120 Ohm	5%	
	R.....5	57.11.4121	120 Ohm	5%	
	R.....6	57.11.4472	4.7 kOhm	5%	
	R.....7	57.11.4223	22 kOhm	5%	
	R.....8	57.11.4273	27 kOhm	5%	
	R.....9	57.11.4102	1 kOhm	5%	
	R....10	57.11.4103	10 kOhm	5%	
	R....11	57.11.4103	10 kOhm	5%	
	R....12	57.11.4103	10 kOhm	5%	
	R....13	57.11.4103	10 kOhm	5%	
	R....14	57.11.4105	1 MOhm	5%	
	R....15	57.11.4103	10 kOhm	5%	
	R....16	57.11.4562	5.6 kOhm	5%	
	R....17	57.11.4103	10 kOhm	5%	
	R....18	57.11.4103	10 kOhm	5%	
	R....19	57.11.4121	120 Ohm	5%	

S T U D E R (00) 86/08/12 CS TACHO SENS. EL. BOARD PL 1.021.695.83 PAGE 2

IND.	POS.NO.	PART NO.	VALUE	SPECIFICATIONS / EQUIVALENT	MANUF.
	R....20	57.11.4472	4.7 kOhm	5%	
	R....21	57.11.4223	22 kOhm	5%	
	R....22	57.11.4273	27 kOhm	5%	
	R....23	57.11.4102	1 kOhm	5%	
	R....24	57.11.4103	10 kOhm	5%	
	R....25	57.11.4103	10 kOhm	5%	
	R....26	57.11.4103	10 kOhm	5%	
	R....27	57.11.4103	10 kOhm	5%	
	R....28	57.11.4103	10 kOhm	5%	
	R....29	57.11.4562	5.6 kOhm	5%	
	R....30	57.11.4103	10 kOhm	5%	
	R....31	57.11.4103	10 kOhm	5%	
	R....32	57.11.4472	4.7 kOhm	5%	
	R....33	57.11.4472	4.7 kOhm	5%	
	R....34	57.11.4472	4.7 kOhm	5%	
	R....35	57.11.4101	100 Ohm	5%	
	R....36	57.11.4105	1 MOhm	5%	
	R....37	57.11.4681	680 Ohm	5%	
	R....38	57.11.4681	680 Ohm	5%	
	R....39	57.11.4822	8.2 kOhm	5%	
	R....40	57.11.4822	8.2 kOhm	5%	
	R....41	58.05.0501	500 Ohm	10%	see Note 1
	TP....1	29.21.6002			Testpoint
	TP....2	29.21.6002			Testpoint
	TP....3	29.21.6002			Testpoint
	TP....4	29.21.6002			Testpoint

S T U D E R (00) 86/08/12 CS TACHO SENS. EL. BOARD PL 1.021.695.83 PAGE 3

IND.	POS.NO.	PART NO.	VALUE	SPECIFICATIONS / EQUIVALENT	MANUF.

Note 1: Pot: Bourns, Nr.: 3296 Z-1-501
Spectrol, Nr.: 64 Z 501 T 000
Murata, Nr.: Pot 3105 Z-1-501

Note 2: Plug: 5-Pin AMP, NR.: --163.680-3

Note 3: Plug: 9-Pin AMP, Nr.: --163.680-7

Note 4: Plug: 3-Pin AMP, Nr.: --163.680-1

CS=Ceramic, EL=Electrolytic, PETP=Polyester Film

MANUFACTURER: Fc=Fairchild, GI=General Instruments, ITT=Intermetall,
Mot=Motorola, NS=National Semiconductors, Ph=Philips,
Sie=Siemens, St=Studer, TI=Texas Instruments

ORIG 86/08/12

S T U D E R (00) 86/08/12 CS TACHO SENS. EL. BOARD PL 1.021.695.83 PAGE 4

TACHO SENSOR ELECTRONICS 1.021.695.84

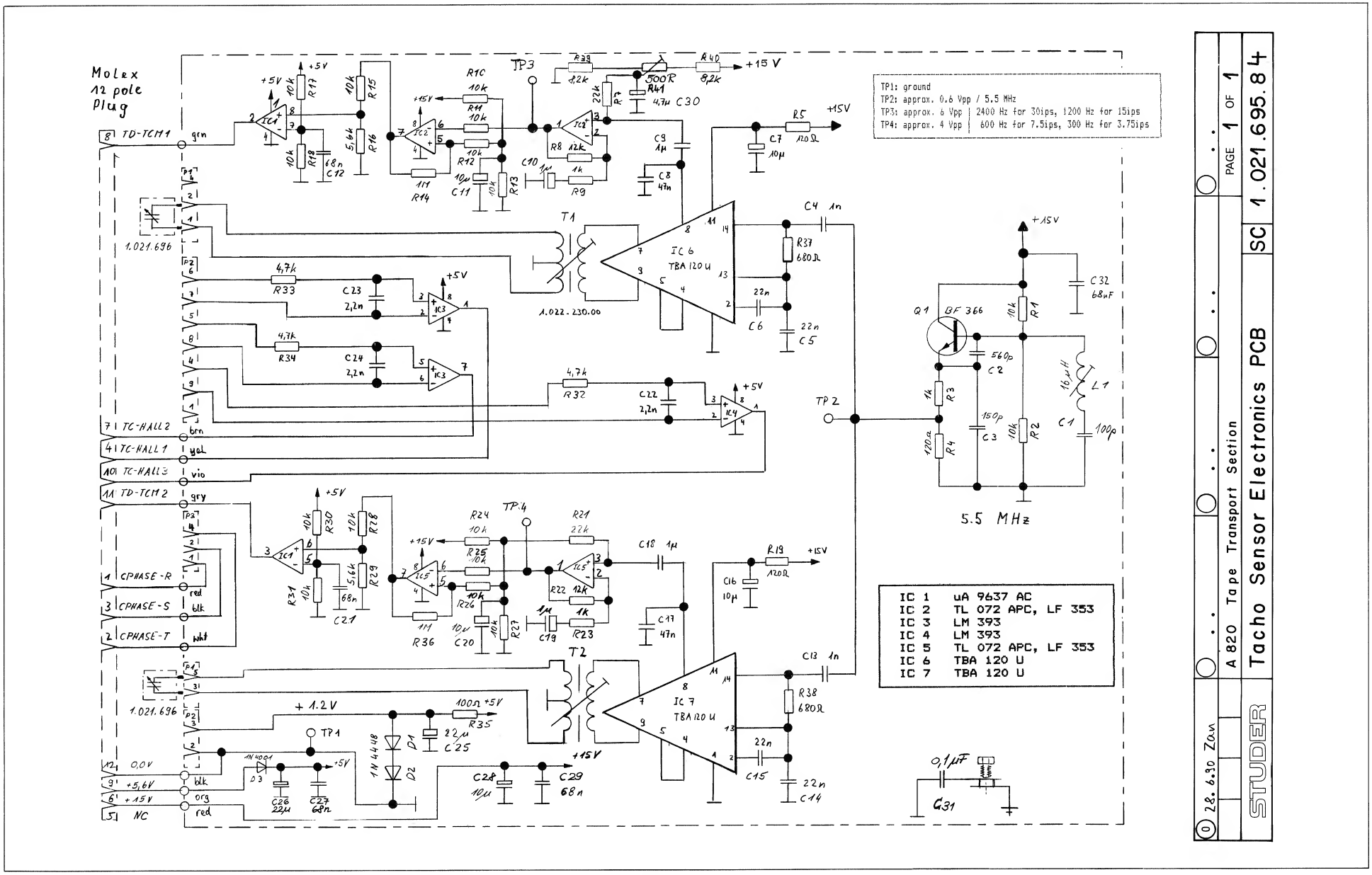

TACHO SENSOR ELECTRONICS 1.021.695.84

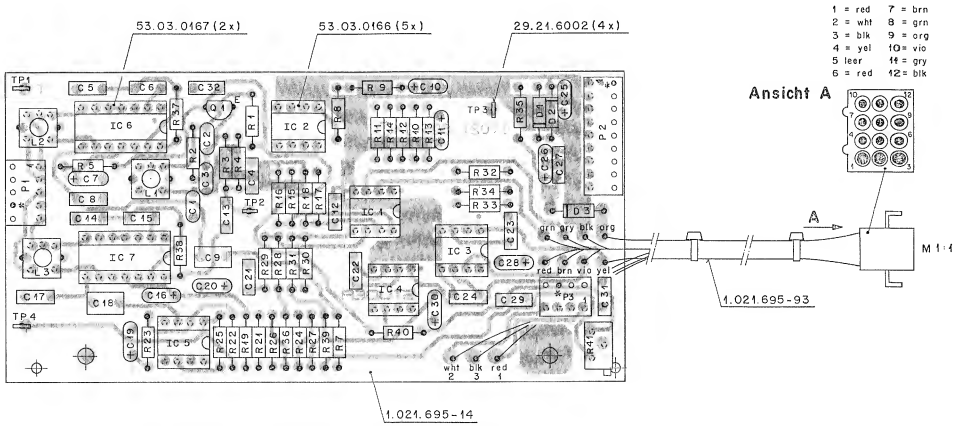

1 = red 7 = brn
2 = wht 8 = grn
3 = blk 9 = org
4 = yel 10 = vio
5 leer 11 = gry
6 = red 12 = blk

Ansicht A

IND.	POS.NO.	PART NO.	VALUE	SPECIFICATIONS / EQUIVALENT	MANUF.
	C.....1	59.34.4101	100 pF	5%, N750, CE	
	C.....2	59.34.5561	560 pF	5%, 630, CE	
	C.....3	59.34.4151	150 pF	5%, N750, CE	
	C.....4	59.06.0102	1 nF	10%, 63V, PETP	
	C.....5	59.06.0223	22 nF	10%, 63V, PETP	
	C.....6	59.06.0223	22 nF	10%, 63V, PETP	
	C.....7	59.26.2100	10 uF	20%, 16V, EL	
	C.....8	59.06.0473	47 nF	10%, 63V, PETP	
	C.....9	59.06.0105	1 uF	10%, 63V, PETP	
	C.....10	59.26.5109	1 uF	20%, 40V, EL	
	C.....11	59.26.2100	10 uF	20%, 16V, EL	
	C.....12	59.06.0683	68 nF	10%, 63V, PETP	
	C.....13	59.06.0102	1 nF	10%, 63V, PETP	
	C.....14	59.06.0223	22 nF	10%, 63V, PETP	
	C.....15	59.06.0223	22 nF	10%, 63V, PETP	
	C.....16	59.26.2100	10 uF	20%, 16V, EL	
	C.....17	59.06.0473	47 nF	10%, 63V, PETP	
	C.....18	59.26.5229	2.2 uF	20%, 25V, EL	
	C.....19	59.26.5109	1 uF	20%, 40V, EL	
	C.....20	59.26.2100	10 uF	20%, 16V, EL	
	C.....21	59.06.0683	68 nF	10%, 63V, PETP	
	C.....22	59.06.0222	2.2 nF	10%, 63V, PETP	
	C.....23	59.06.0222	2.2 nF	10%, 63V, PETP	
	C.....24	59.06.0222	2.2 nF	10%, 63V, PETP	
	C.....25	59.26.1220	22 uF	20%, 10V, EL	
	C.....26	59.26.1220	22 uF	20%, 10V, EL	
	C.....27	59.06.0683	68 nF	10%, 63V, PETP	
	C.....28	59.26.2100	10 uF	20%, 16V, EL	
	C.....29	59.06.0683	68 nF	10%, 63V, PETP	
	C.....30	59.26.1479	4.7 uF	10%, 10V, EL	
	C.....31	59.06.0104	100 nF	10%, 63V, PETP	
	C.....32	59.06.0683	68 nF	10%, 63V, PETP	
	D.....1	50.04.0125	1N 4448		Fe,ITT,Ph,Sie,TE
	D.....2	50.04.0125	1N 4448		Fe,ITT,Ph,Sie,TE
	D.....3	50.04.0122	1N 4001	(to 4004)	Mot

IND.	POS.NO.	PART NO.	VALUE	SPECIFICATIONS / EQUIVALENT	MANUF.
	IC....1	50.15.0114	UA9637ACP	9637 ATC	Fe,TI
	IC....2	50.09.0101	LF 353 N	TL 072 CP	NS,TI
	IC....3	50.05.0203	LM 393 N	LM 393 P	NS,TI
	IC....4	50.05.0203	LM 393 N	LM 393 P	NS,TI
	IC....5	50.09.0101	LF 353 N	TL 072 CP	NS,TI
	IC....6	50.11.0151	TBA 120U		Ph,Sie
	IC....7	50.11.0151	TBA 120U		Ph,Sie
	L.....1	1.022.222.00	16 nH	HF-COIL	St
	L.....2	1.022.222.00	16 nH	HF-COIL	St
	P.....1	54.01.0288		see Note 2	
	P.....2	54.01.0217		see Note 3	
(00)	P.....3	54.01.0287		see Note 4	
	P.....3	54.01.0241		see Note 4	
	Q.....1	50.03.0514	BF 366		Mot
	R.....1	57.11.4103	10 kOhm	5%	
	R.....2	57.11.4103	10 kOhm	5%	
	R.....3	57.11.4102	1 kOhm	5%	
	R.....4	57.11.4121	120 Ohm	5%	
	R.....5	57.11.4121	120 Ohm	5%	
	R.....6			not used	
	R.....7	57.11.4223	22 kOhm	5%	
	R.....8	57.11.4123	12 kOhm	5%	
	R.....9	57.11.4102	1 kOhm	5%	
	R....10	57.11.4103	10 kOhm	5%	
	R....11	57.11.4103	10 kOhm	5%	
	R....12	57.11.4103	10 kOhm	5%	
	R....13	57.11.4103	10 kOhm	5%	
	R....14	57.11.4105	1 MOhm	5%	
	R....15	57.11.4103	10 kOhm	5%	
	R....16	57.11.4562	5.6 kOhm	5%	
	R....17	57.11.4103	10 kOhm	5%	
	R....18	57.11.4103	10 kOhm	5%	
	R....19	57.11.4121	120 Ohm	5%	

IND.	POS.NO.	PART NO.	VALUE	SPECIFICATIONS / EQUIVALENT	MANUF.
	R....20			not used	
	R....21	57.11.4223	22 kOhm	5%	
	R....22	57.11.4273	27 kOhm	5%	
	R....23	57.11.4102	1 kOhm	5%	
	R....24	57.11.4103	10 kOhm	5%	
	R....25	57.11.4103	10 kOhm	5%	
	R....26	57.11.4103	10 kOhm	5%	
	R....27	57.11.4103	10 kOhm	5%	
	R....28	57.11.4103	10 kOhm	5%	
	R....29	57.11.4562	5.6 kOhm	5%	
	R....30	57.11.4103	10 kOhm	5%	
	R....31	57.11.4103	10 kOhm	5%	
	R....32	57.11.4472	4.7 kOhm	5%	
	R....33	57.11.4472	4.7 kOhm	5%	
	R....34	57.11.4472	4.7 kOhm	5%	
	R....35	57.11.4101	100 Ohm	5%	
	R....36	57.11.4105	1 MOhm	5%	
	R....37	57.11.4681	680 Ohm	5%	
	R....38	57.11.4681	680 Ohm	5%	
	R....39	57.11.4822	8.2 kOhm	5%	
	R....40	57.11.4822	8.2 kOhm	5%	
	R....41	58.05.0501	500 Ohm	10% see Note 1	
	T.....1	1.022.230.00	Discrim	inator X-former	St
	TP....1	29.21.6002		Testpoint	
	TP....2	29.21.6002		Testpoint	
	TP....3	29.21.6002		Testpoint	
	TP....4	29.21.6002		Testpoint	

IND.	POS.NO.	PART NO.	VALUE	SPECIFICATIONS / EQUIVALENT	MANUF.

Note 1: Pot: Bourns, Nr.: 3296 Z-1-501
Spectrol, Nr.: 64 Z 501 T 000
Murata, Nr.: Pot 3105 Z-1-501

Note 2: Plug: 5-Pin AMP, NR.: --163.680-3

Note 3: Plug: 9-Pin AMP, Nr.: --163.680-7

Note 4: Plug: 3-Pin AMP, Nr.: --163.680-1

CE=Ceramic, EL=Electrolytic, PETP=Polyester Film

MANUFACTURER: Fe=Fairchild, GI=General Instruments, ITT=Intermetall,
Mot=Motorola, NS=National Semiconductors, Ph=Philips,
Sie=Siemens, St=Studer, TI=Texas Instruments

Release 17th July 1990

ORIG 90/03/23

HALL SENSOR BOARD 1.021.697.00

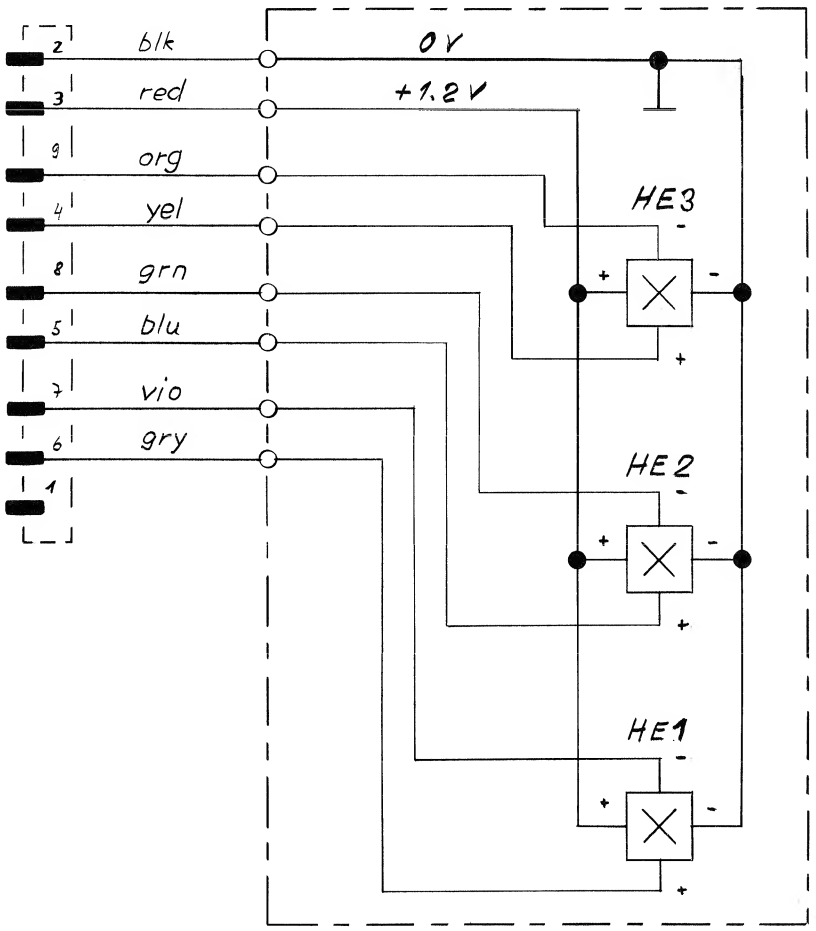

0 03.12.84 Bulk	. .	. .	. .	. .
	A 820 Tape Transport Section			PAGE 1 OF 1
STUDER	Hall Sensor PCB		SC	1.021.697.00

HALL SENSOR BOARD 1.021.697.00

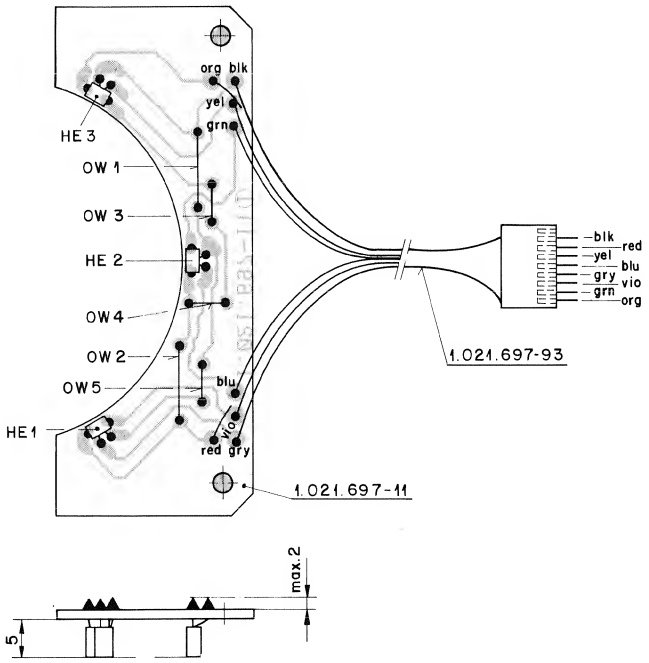

IND.	POS.NO.	PART NO.	VALUE	SPECIFICATIONS / EQUIVALENT	MANUF.
(01)	HE....1	1.010.050.50		IC 50.99.0170 GEBOGEN	
(01)	HE....2	1.010.050.50		IC 50.99.0170 GEBOGEN	
(01)	HE....3	1.010.050.50		IC 50.99.0170 GEBOGEN	
	OW....1	1.010.324.64	10.2 mm	Wire bridge	
	OW....2	1.010.324.64	10.2 mm	Wire bridge	
	OW....3	1.010.321.64	5.0 mm	Wire bridge	
	OW....4	1.010.321.64	5.0 mm	Wire bridge	
	OW....5	1.010.321.64	5.0 mm	Wire bridge	

(01) 09.03.87 SERIE ADJUST

ORIG 87/03/09

S T U D E R (01) 87/03/09 CHS HALL SENSOR BOARD PL 1.021.697.00 PAGE 1

DISPLAY UNIT ILLUMINATED 1.820.239.81

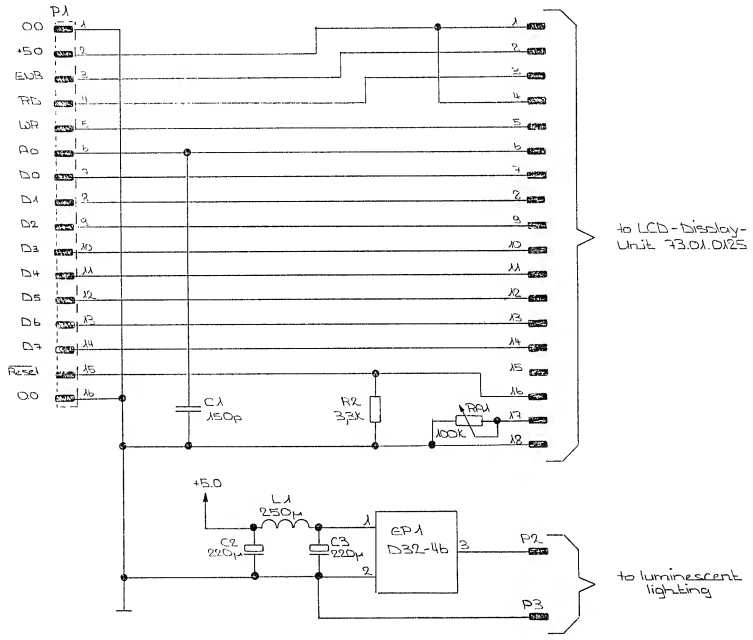

0 24.09.92	. .	. .	. .	. .
	1.2.0			PAGE 1 OF 1
STUDER	Display Connection Board		SC	1.820.239.81

DISPLAY UNIT ILLUMINATED 1.820.239.81

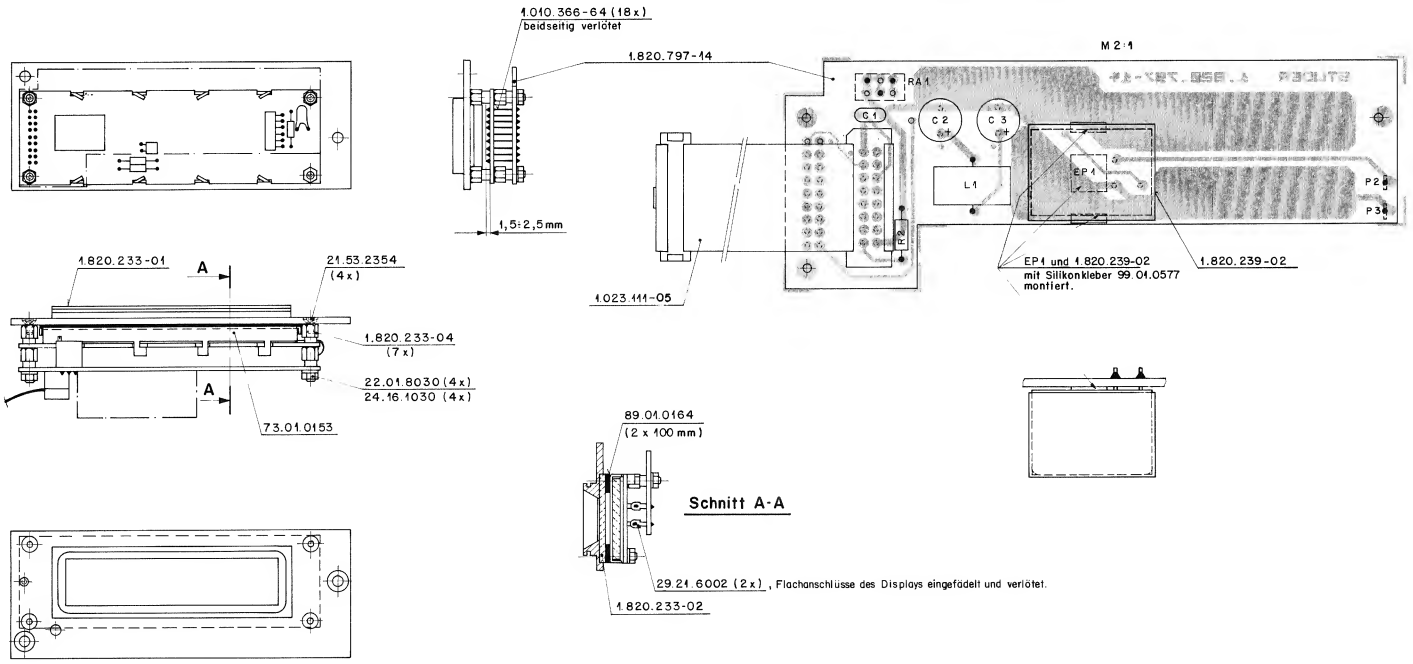

IND.	POS.NO.	PART NO.	VALUE	SPECIFICATIONS / EQUIVALENT	MANUF.
	C.....1	59.34.4151	150 pF	5%, 63V, Cer	
	C.....2	59.22.3221	220 uF	-20%, 10V, El	
	C.....3	59.22.3221	220 uF	-20%, 10V, El	
	L.....1	62.03.0005	250 uH	1 A, Filter coil	
	EP....1	73.01.0154		Power Supply (DC-AC) for LCD-Illumination	
	RA....1	58.05.1104	100 kOhm	Potentiometer 22-turn, 10%, linear	
	R.....2	57.11.3332	3.3 kOhm	1%	
	F.....1	1.023.111.05		Connection cable	
	F.....2	29.21.6002			
	F.....3	29.21.6002			

Cer=Ceramic, El=Electrolytic

ORIG 89/09/06

S T U D E R (OD) 89/09/06 GAE DISPLAY UNIT ILLUMINATED FL 1.820.239.81 PAGE 1

CAPSTAN INTERFACE 1.820.727.00

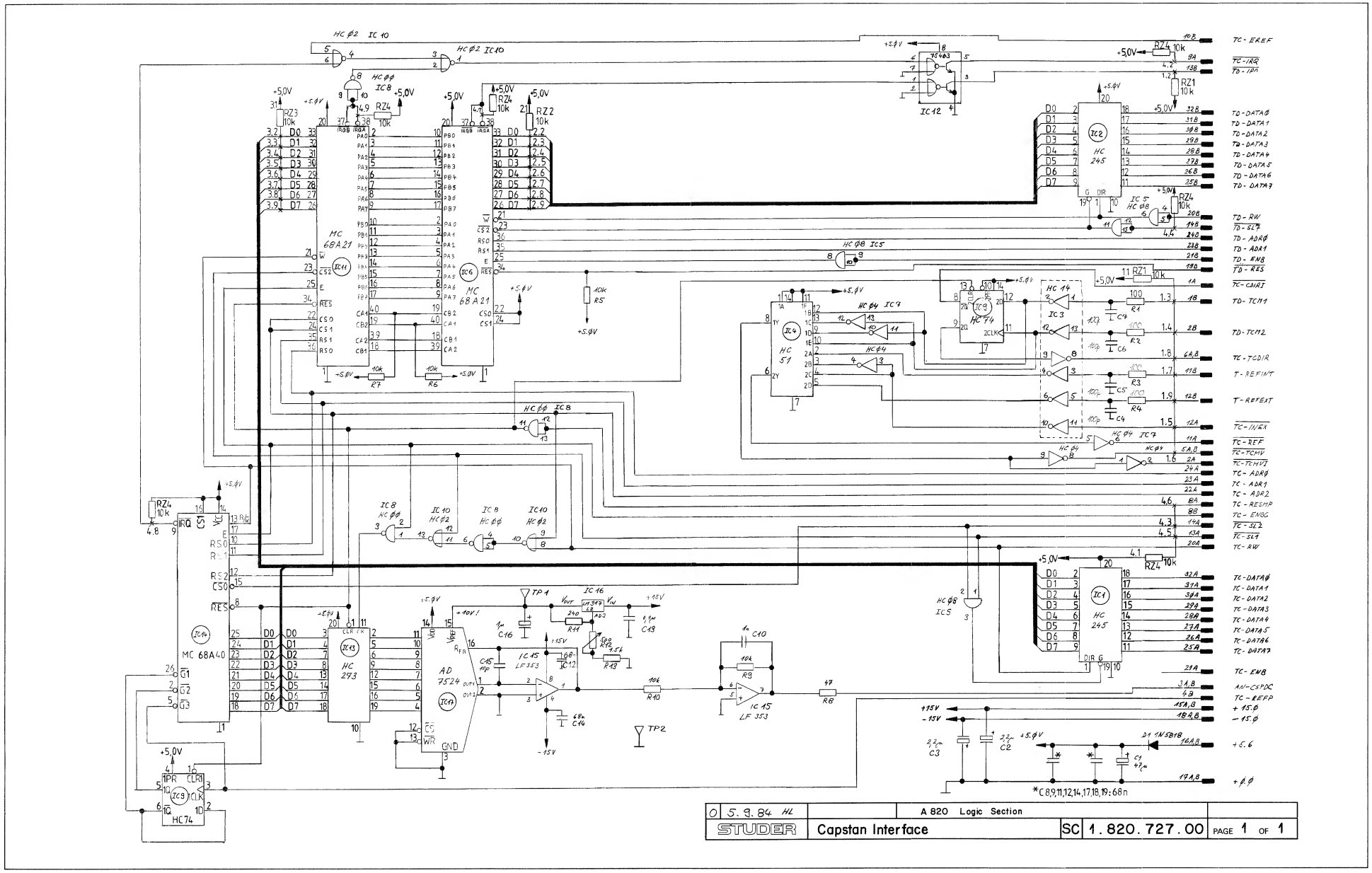

CAPSTAN INTERFACE 1.820.727.00

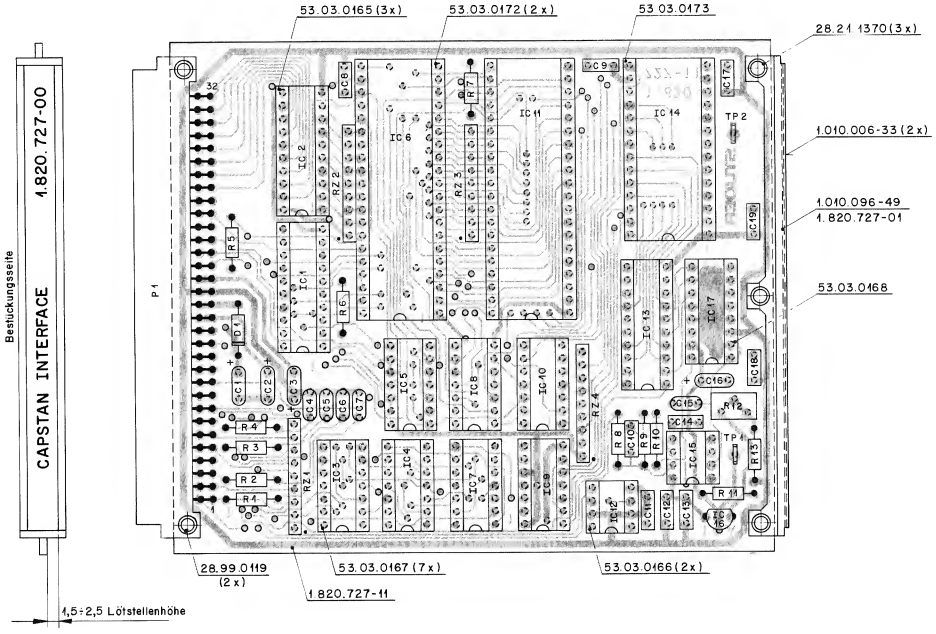

IND.	POS.NO.	PART NO.	VALUE	SPECIFICATIONS / EQUIVALENT	MANUF.
	C.....1	59.26.0470	47 uF	20%, 6.3V	Ph
	C.....2	59.26.5229	2.2 uF	20%, 16V	Ph
	C.....3	59.26.5229	2.2 uF	20%, 16V	Ph
	C.....4	59.45.4101	100 pF	20%	Ph
	C.....5	59.45.4101	100 pF	20%	Ph
	C.....6	59.45.4101	100 pF	20%	Ph
	C.....7	59.45.4101	100 pF	20%	Ph
	C.....8	59.06.0683	68 nF	20%	Sie
	C.....9	59.06.0683	68 nF	20%	Sie
	C....10	59.32.4102	1 nF	20%	Ph
	C....11	59.06.0683	68 nF	20%	Sie
	C....12	59.06.0683	68 nF	20%	Sie
	C....13	59.06.0104	100 nF	20%	Sie
	C....14	59.06.0683	68 nF	20%	Sie
	C....15	59.45.1100	10 pF	10%	Ph
	C....16	59.26.9109	1 uF	20%, 16V	Ph
	C....17	59.06.0683	68 nF	20%	Sie
	C....18	59.06.0683	68 nF	20%	Sie
	C....19	59.06.0683	68 nF	20%	Sie
	D.....1	50.04.0512	1N 5818	1N 5819	Mot
	IC....1	50.17.1245	74 HC 245		Mot,Nat,To,Ph,RCA,TI
	IC....2	50.17.1245	74 HC 245		Mot,Nat,To,Ph,RCA,TI
	IC....3	50.17.1014	74 HC 14		Mot,NS,To,Ph,RCA,TI
	IC....4	50.17.1051	74 HC 51		Mot,Nat,To,Ph,RCA,TI
	IC....5	50.17.1008	74 HC 08		Mot,NS,To,Ph,RCA,TI
	IC....6	50.16.0106	MC68A21P	F68A21PC	Mot,AMI,Fc
	IC....7	50.17.1004	74 HC 04		Mot,NS,To,Ph,RCA,TI
	IC....8	50.17.1000	74 HC 00		Mot,NS,To,Ph,RCA,TI
	IC....9	50.17.1074	74 HC 74		Mot,NS,To,Ph,RCA,TI
	IC...10	50.17.1002	74 HC 02		Mot,Nat,To,Ph,RCA,TI
	IC...11	50.16.0106	MC68A21P	F68A21PC	Mot,AMI,Fc
	IC...12	50.05.0203	SN75463P	DS3613N	TI,NS
	IC...13	50.17.1273	74 HC 273		Mot,NS,To,Ph,RCA,TI
	IC...14	50.16.0113	MC68A40	HD68A40	Mot,Hi
	IC...15	50.09.0101	TL072CP	LF353N	TI,NS

S T U D E R (00) 84/09/05 WE CAPSTAN INTERFACE PL 1.820.727.00 PAGE 1

IND.	POS.NO.	PART NO.	VALUE	SPECIFICATIONS / EQUIVALENT	MANUF.
	IC...16	50.10.0108	LM 317 LZ		Nat,Mot
	IC...17	50.07.0002	AD7524JN		ADI,MPS
	P.....1	54.11.2004		Plug see note 1	
	R.....1	57.11.4101	100 Ohm	10%	
	R.....2	57.11.4101	100 Ohm	10%	
	R.....3	57.11.4101	100 Ohm	10%	
	R.....4	57.11.4101	100 Ohm	10%	
	R.....5	57.11.4103	10 kOhm	10%	
	R.....6	57.11.4103	10 kOhm	10%	
	R.....7	57.11.4103	10 kOhm	10%	
	R.....8	57.11.4470	47 Ohm	10%	
	R.....9	57.11.4103	10 kOhm	5%	
	R....10	57.11.4103	10 kOhm	5%	
	R....11	57.11.3241	240 Ohm	10%	
	R....12	58.05.0501	500 Ohm	Potentiometer, see note 2	
	R....13	57.11.4152	1.5 kOhm	10%	
	RZ....1	57.88.4103		Network 8 * 10 kOhm (old part 1.010.014.57)	
	RZ....2	57.88.4103		Network 8 * 10 kOhm (old part 1.010.014.57)	
	RZ....3	57.88.4103		Network 8 * 10 kOhm (old part 1.010.014.57)	
	RZ....4	57.88.4103		Network 8 * 10 kOhm (old part 1.010.014.57)	
	TP....1	54.02.0320		Testpoint	
	TP....2	54.02.0320		Testpoint	

S T U D E R (00) 84/09/05 WE CAPSTAN INTERFACE PL 1.820.727.00 PAGE 2

IND. POS.NO. PART NO. VALUE SPECIFICATIONS / EQUIVALENT MANUF.

Note 1 - Plug : 2 * 32 Euro board
Burndy PI 64 B 20 P00 F00 Z0
Erni 9722.563.191

Note 2 - Potentiometer : 500 Ohm, 10%, .5W, PMG
Bourns 3296 Z - 1 - 501
Spectrol 64 Z 501 T 000

Manufacturer: ADI=Analog Devices Inc., AMI=American Microsystem Inc.,
Fc=Fairchild, Hi=Hitachi, Mot=Motorola,
MPS=Micro Power Systems, Nat=National (Matsushita),
NS=National Semiconductors, Ph=Philips (incl. Valvo),
RCA=Radio Corporation of America, TI=Texas Instruments,
To=Toshiba.

ORIG 84/09/05
S T U D E R (00) 84/09/05 WE CAPSTAN INTERFACE PL 1.820.727.00 PAGE 3

PARALLEL REMOTE INTERFACE 1.820.738.84

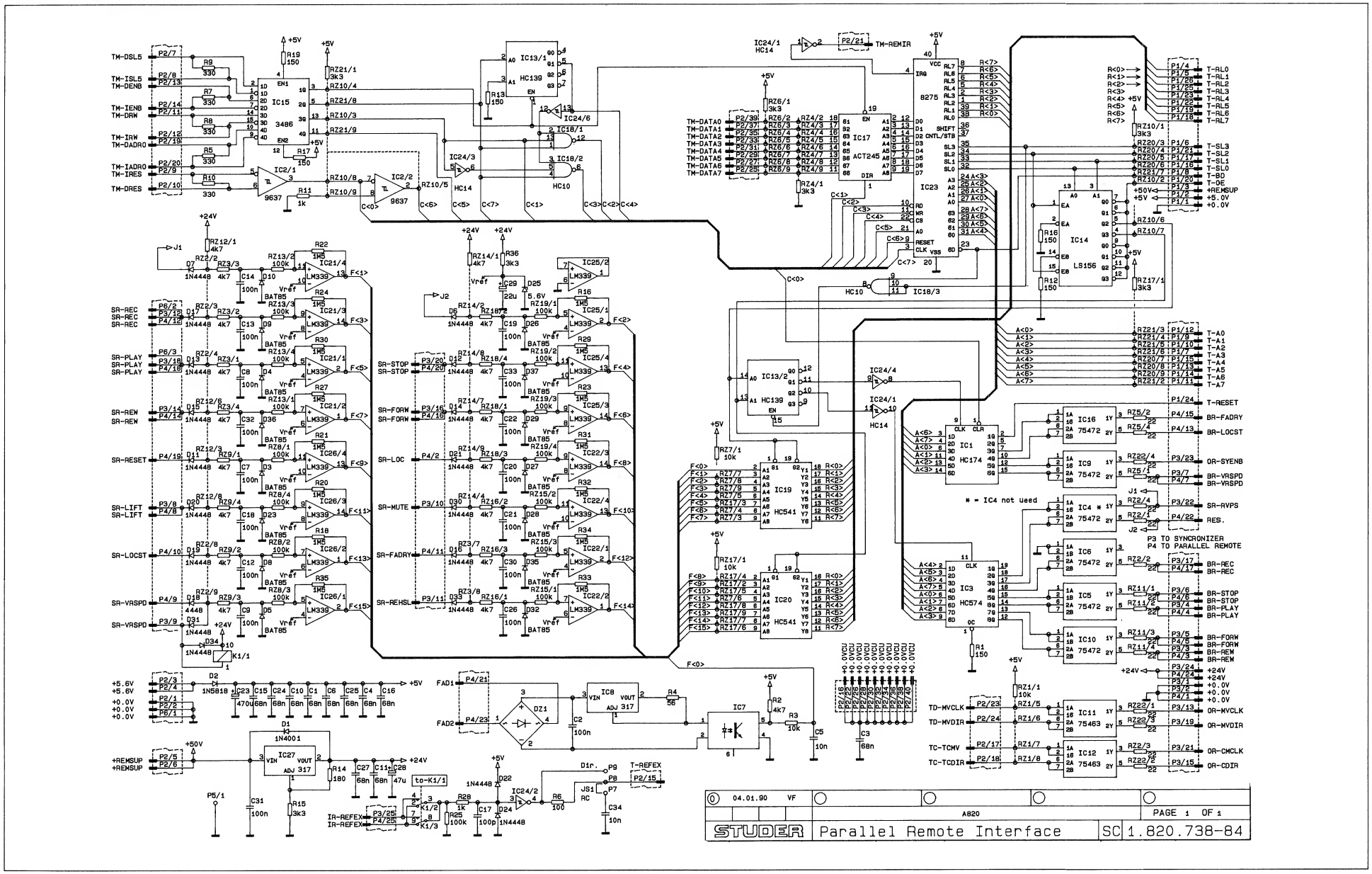

PARALLEL REMOTE INTERFACE 1.820.738.84

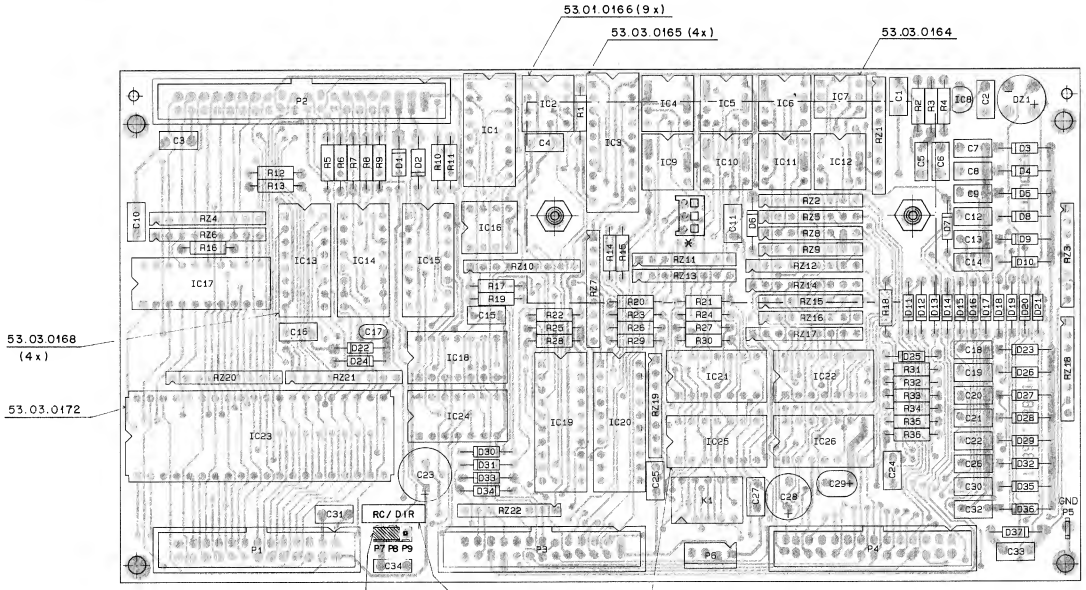

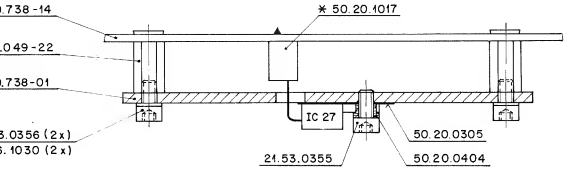

IND.	POS.NO.	PART NO.	VALUE	SPECIFICATIONS / EQUIVALENT	MANUF.
	C....1	59.40.0683	68 nF	-10%, PETP	
	C....2	59.40.0104	0.1 uF	-10%, PETP	
	C....3	59.40.0683	68 nF	-10%, PETP	
	C....4	59.40.0683	68 nF	-10%, PETP	
	C....5	59.40.0103	10 nF	-10%, PETP	
	C....6	59.40.0683	68 nF	-10%, PETP	
	C....7	59.40.0104	0.1 uF	-10%, PETP	
	C....8	59.40.0104	0.1 uF	-10%, PETP	
	C....9	59.40.0104	0.1 uF	-10%, PETP	
	C....10	59.40.0683	68 nF	-10%, PETP	
	C....11	59.40.0683	68 nF	-10%, PETP	
	C....12	59.40.0104	0.1 uF	-10%, PETP	
	C....13	59.40.0104	0.1 uF	-10%, PETP	
	C....14	59.40.0104	0.1 uF	-10%, PETP	
	C....15	59.40.0683	68 nF	-10%, PETP	
	C....16	59.40.0683	68 nF	-10%, PETP	
	C....17	59.45.4101	100 pF	5%, CER	
	C....18	59.40.0104	0.1 uF	-10%, PETP	
	C....19	59.40.0104	0.1 uF	-10%, PETP	
	C....20	59.40.0104	0.1 uF	-10%, PETP	
	C....21	59.40.0104	0.1 uF	-10%, PETP	
	C....22	59.40.0104	0.1 uF	-10%, PETP	
	C....23	59.22.3471	470 uF	-20%, 10V, EL	
	C....24	59.40.0683	68 nF	-10%, PETP	
	C....25	59.40.0683	68 nF	-10%, PETP	
	C....26	59.40.0104	0.1 uF	-10%, PETP	
	C....27	59.40.0683	68 nF	-10%, PETP	
	C....28	59.41.6470	47 uF	-20%, 40V, EL	
	C....29	59.42.1220	22 uF	-20%, 10V, SAL	
	C....30	59.40.0104	0.1 uF	-10%, PETP	
	C....31	59.40.0104	0.1 uF	-10%, PETP	
	C....32	59.40.0104	0.1 uF	-10%, PETP	
	C....33	59.40.0104	0.1 uF	-10%, PETP	
	C....34	59.40.0103	10 nF	-10%, PETP	
	D....1	50.04.0122	1N 4001	1N4004	Mot
	D....2	50.04.0512	1N 5818	1N 5819	Mot

IND.	POS.NO.	PART NO.	VALUE	SPECIFICATIONS / EQUIVALENT	MANUF.
	D....3	50.04.0127	BAT 85	BAS 40-02	Ph,Sie
	D....4	50.04.0127	BAT 85	BAS 40-02	Ph,Sie
	D....5	50.04.0127	BAT 85	BAS 40-02	Ph,Sie
	D....6	50.04.0125	1N 4448		Fc,ITT,Ph,Sie
	D....7	50.04.0125	1N 4448		Fc,ITT,Ph,Sie
	D....8	50.04.0127	BAT 85	BAS 40-02	Ph,Sie
	D....9	50.04.0127	BAT 85	BAS 40-02	Ph,Sie
	D....10	50.04.0127	BAT 85	BAS 40-02	Ph,Sie
	D....11	50.04.0125	1N 4448		Fc,ITT,Ph,Sie
	D....12	50.04.0125	1N 4448		Fc,ITT,Ph,Sie
	D....13	50.04.0125	1N 4448		Fc,ITT,Ph,Sie
	D....14	50.04.0125	1N 4448		Fc,ITT,Ph,Sie
	D....15	50.04.0125	1N 4448		Fc,ITT,Ph,Sie
	D....16	50.04.0125	1N 4448		Fc,ITT,Ph,Sie
	D....17	50.04.0125	1N 4448		Fc,ITT,Ph,Sie
	D....18	50.04.0125	1N 4448		Fc,ITT,Ph,Sie
	D....19	50.04.0125	1N 4448		Fc,ITT,Ph,Sie
	D....20	50.04.0125	1N 4448		Fc,ITT,Ph,Sie
	D....21	50.04.0125	1N 4448		Fc,ITT,Ph,Sie
	D....22	50.04.0125	1N 4448		Fc,ITT,Ph,Sie
	D....23	50.04.0127	BAT 85	BAS 40-02	Ph,Sie
	D....24	50.04.0125	1N 4448		Fc,ITT,Ph,Sie
	D....25	50.04.1108	5.6 V Z	BZX83 C 5V6, BZX55 C 5V6, ZPD 5.6	ITT,Sie
	D....26	50.04.0127	BAT 85	BAS 40-02	Ph,Sie
	D....27	50.04.0127	BAT 85	BAS 40-02	Ph,Sie
	D....28	50.04.0127	BAT 85	BAS 40-02	Ph,Sie
	D....29	50.04.0127	BAT 85	BAS 40-02	Ph,Sie
	D....30	50.04.0125	1N 4448		Fc,ITT,Ph,Sie
	D....31	50.04.0125	1N 4448		Fc,ITT,Ph,Sie
	D....32	50.04.0127	BAT 85	BAS 40-02	Ph,Sie
	D....33	50.04.0125	1N 4448		Fc,ITT,Ph,Sie
	D....34	50.04.0125	1N 4448		Fc,ITT,Ph,Sie
	D....35	50.04.0127	BAT 85	BAS 40-02	Ph,Sie
	D....36	50.04.0127	BAT 85	BAS 40-02	Ph,Sie
	D....37	50.04.0127	BAT 85	BAS 40-02	Ph,Sie
	DZ....1	70.01.0223		B 250 C 800 SI	GI,Mot

IND.	POS.NO.	PART NO.	VALUE	SPECIFICATIONS / EQUIVALENT	MANUF.
	IC....1	50.17.1174	74 HC 174	.. 74 HC 174 .	Mot,NS,Ph,RCA,SGS,TI,To
	IC....2	50.15.0114	uA9637ATC	uA9637ACP	Fc,TI
	IC....3	50.17.1574	74 HC 574	.. 74 HC 574 .	Mot,NS,Ph,RCA,SGS,TI,To
(OD)	IC....4	50.05.0227	SN 75462P		TI
(01)	IC....4		not used		TI
	IC....5	50.05.0227	SN 75462P		TI
	IC....6	50.05.0227	SN 75462P		TI
	IC....7	50.99.0126	4N 26	4N 26	Mot
	IC....8	50.10.0108	LM 317 LZ		NS,Mot
	IC....9	50.05.0227	SN 75462P		TI
	IC....10	50.05.0227	SN 75462P		TI
	IC....11	50.05.0203	SN 75463P		TI
	IC....12	50.05.0203	SN 75463P		TI
	IC....13	50.17.1139	74 HC 139	.. 74 HC 139 .	Mot,NS,Ph,RCA,SGS,TI,To
	IC....14	50.06.0156	74 LS 156	SN 74 LS 156 N	Fc,NS,TI
	IC....15	50.15.0104	MC 3486 P	DS 3486 N	Mot,NS
	IC....16	50.05.0227	SN 75462P		TI
	IC....17	50.17.7245	74ACT 245	.. 74ACT 245 .	Ph,Sie,TI
	IC....18	50.17.1010	74 HC 10	.. 74 HC 10 .	Mot,NS,Ph,RCA,SGS,TI,To
	IC....19	50.17.1541	74 HC 541	.. 74 HC 541 .	Mot,NS,Ph,RCA,SGS,TI,To
	IC....20	50.17.1541	74 HC 541	.. 74 HC 541 .	Mot,NS,Ph,RCA,SGS,TI,To
	IC....21	50.11.0104	LM 339 AN	339 A/UA 339	Fc,Mot,NS,Tho
	IC....22	50.11.0104	LM 339 AN	339 A/UA 339	Fc,Mot,NS,Tho
	IC....23	50.16.0111	IP 8279-5	M5L 8279 P-5	It,Mi
	IC....24	50.17.1014	74 HC 14	.. 74 HC 14	Mot,NS,Ph,RCA,TI,To
	IC....25	50.11.0104	LM 339 AN	339 A/UA 339	Fc,Mot,NS,Tho
	IC....26	50.11.0104	LM 339 AN	339 A/UA 339	Fc,Mot,NS,Tho
	IC....27	50.10.0104	LM 317 T	LM 317 SP	NS,Mot,TI,Tho
	K....1	56.04.0197	24 V 2x0	125V/ 2 A, AG/AU	
	P....1	54.14.2003	Connector	26 contacts, flat cable	
	P....2	54.14.2004	Connector	40 contacts, flat cable	
	P....3	54.14.2003	Connector	26 contacts, flat cable	
	P....4	54.14.2003	Connector	26 contacts, flat cable	
	P....5	54.02.0320	Connector	1 contact , 2.8x0.8, flat	
	P....6	54.99.0213	Connector	4 contacts, straight, AMP	

IND.	POS.NO.	PART NO.	VALUE	SPECIFICATIONS / EQUIVALENT	MANUF.
	P....7	54.01.0020	Connector	1 contact , .63x.63, H=5.8/3.4	
	P....8	54.01.0020	Connector	1 contact , .63x.63, H=5.8/3.4	
	P....9	54.01.0020	Connector	1 contact , .63x.63, H=5.8/3.4	
	R....1	57.11.3151	150 Ohm	2%	
	R....2	57.11.3472	4.7 kOhm	2%	
	R....3	57.11.3103	10 kOhm	2%	
	R....4	57.11.3560	56 Ohm	2%	
	R....5	57.11.3331	330 Ohm	2%	
	R....6	57.11.3101	100 Ohm	2%	
	R....7	57.11.3331	330 Ohm	2%	
	R....8	57.11.3331	330 Ohm	2%	
	R....9	57.11.3331	330 Ohm	2%	
	R....10	57.11.3331	330 Ohm	2%	
	R....11	57.11.3102	1 kOhm	2%	
	R....12	57.11.3151	150 Ohm	2%	
	R....13	57.11.3151	150 Ohm	2%	
	R....14	57.11.3181	180 Ohm	1%	
	R....15	57.11.3332	3.3 kOhm	2%	
	R....16	57.11.3151	150 Ohm	2%	
	R....17	57.11.3151	150 Ohm	2%	
	R....18	57.11.5155	1.5 MOhm	5%	
	R....19	57.11.3151	150 Ohm	2%	
	R....20	57.11.5155	1.5 MOhm	5%	
	R....21	57.11.5155	1.5 MOhm	5%	
	R....22	57.11.5155	1.5 MOhm	5%	
	R....23	57.11.5155	1.5 MOhm	5%	
	R....24	57.11.5155	1.5 MOhm	5%	
	R....25	57.11.3104	100 kOhm	2%	
	R....26	57.11.5155	1.5 MOhm	5%	
	R....27	57.11.5155	1.5 MOhm	5%	
	R....28	57.11.3102	1 kOhm	2%	
	R....29	57.11.5155	1.5 MOhm	5%	
	R....30	57.11.5155	1.5 MOhm	5%	
	R....31	57.11.5155	1.5 MOhm	5%	
	R....32	57.11.5155	1.5 MOhm	5%	
	R....33	57.11.5155	1.5 MOhm	5%	

IND.	POS.NO.	PART NO.	VALUE	SPECIFICATIONS / EQUIVALENT	MANUF.
	R....34	57.11.5155	1.5 MOhm	5%	
	R....35	57.11.5155	1.5 MOhm	5%	
	R....36	57.11.3332	3.3 kOhm	2%	
	RZ....1	57.88.4103	Network,	8 x 10 KOhm, 2%, single line	
	RZ....2	57.88.2220	Network,	4 x 22 Ohm, 2%, single line	
	RZ....3	57.88.2472	Network,	4 x 4.7 KOhm, 2%, single line	
	RZ....4	57.88.4332	Network,	8 x 3.3 kOhm, 5%, single line	
	RZ....5	57.88.2220	Network,	4 x 22 Ohm, 2%, single line	
	RZ....6	57.88.4332	Network,	8 x 3.3 kOhm, 5%, single line	
	RZ....7	57.88.4103	Network,	8 x 10 KOhm, 2%, single line	
	RZ....8	57.88.2104	Network,	4 x 100 KOhm, 2%, single line	
	RZ....9	57.88.2472	Network,	4 x 4.7 KOhm, 2%, single line	
	RZ....10	57.88.4332	Network,	8 x 3.3 kOhm, 5%, single line	
	RZ....11	57.88.2220	Network,	4 x 22 Ohm, 2%, single line	
	RZ....12	57.88.4472	Network,	8 x 4.7 KOhm, 2%, single line	
	RZ....13	57.88.2104	Network,	4 x 100 KOhm, 2%, single line	
	RZ....14	57.88.4472	Network,	8 x 4.7 KOhm, 2%, single line	
	RZ....15	57.88.2104	Network,	4 x 100 KOhm, 2%, single line	
	RZ....16	57.88.2472	Network,	4 x 4.7 KOhm, 2%, single line	
	RZ....17	57.88.4103	Network,	8 x 10 KOhm, 2%, single line	
	RZ....18	57.88.2472	Network,	4 x 4.7 KOhm, 2%, single line	
	RZ....19	57.88.2104	Network,	4 x 100 KOhm, 2%, single line	
	RZ....20	57.88.4332	Network,	8 x 3.3 kOhm, 5%, single line	
	RZ....21	57.88.4332	Network,	8 x 3.3 kOhm, 5%, single line	
	RZ....22	57.88.2220	Network,	4 x 22 Ohm, 2%, single line	

(01) 06.06.90 Correction of a mistake in documents.

El=Electrolytic, PETP=Polyester, CER=Ceramic, SAL=Solid Aluminium

MANUFACTURERS: Fc=Fairchild, GI=General Instruments, It=Intel, Mi=Mitsubishi,
Mot=Motorola, NS=National Semiconductors, Ph=Philips,
RCA=RCA Corporation, SGS=SGS/Ates, Tho=Thomson,
TI=Texas Instruments, To=Toshiba.

ORIG 90/01/04 (01) 90/06/08

PARALLEL REMOTE INTERFACE 1.820.738.85

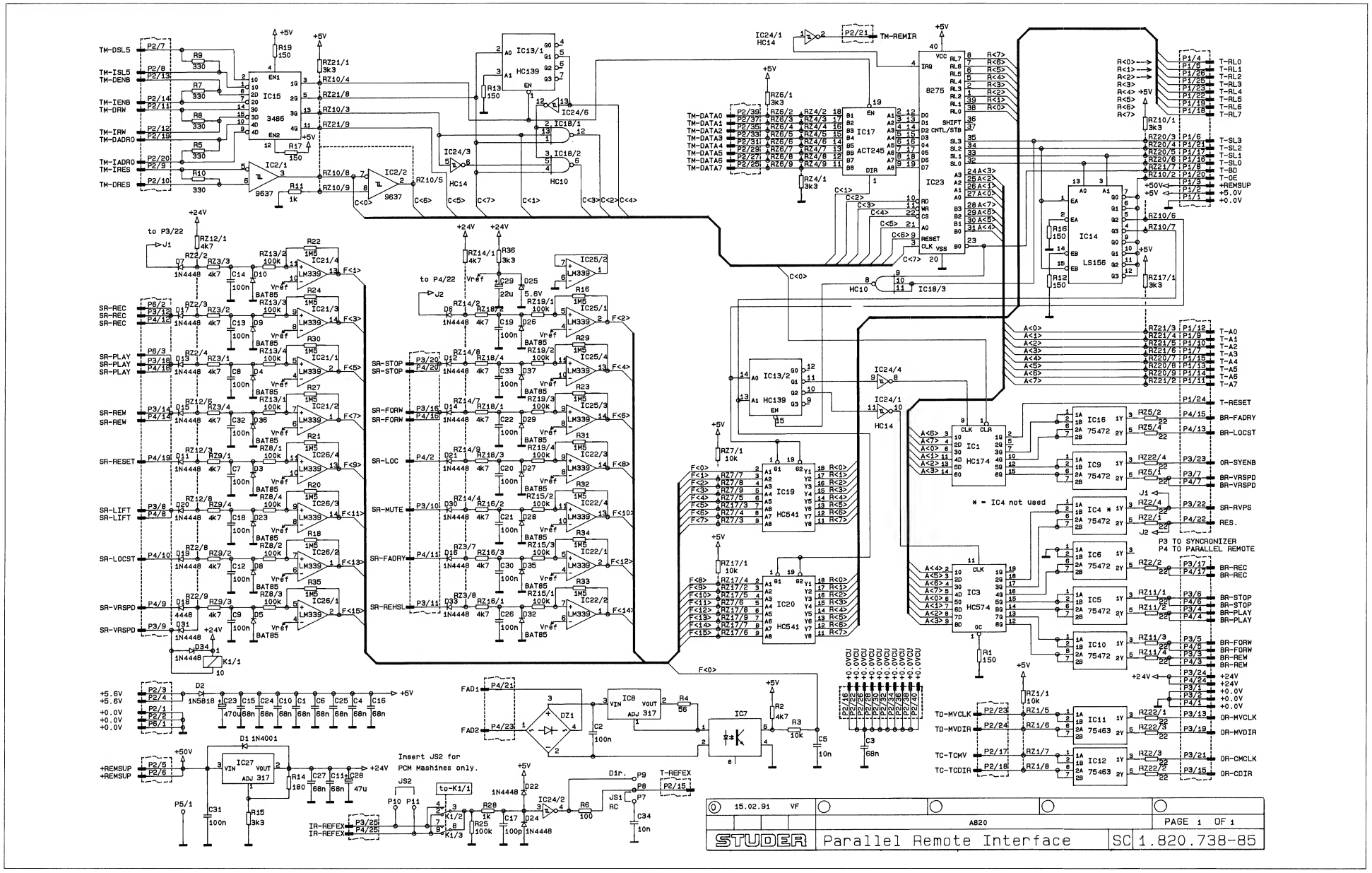

PARALLEL REMOTE INTERFACE 1.820.738.85

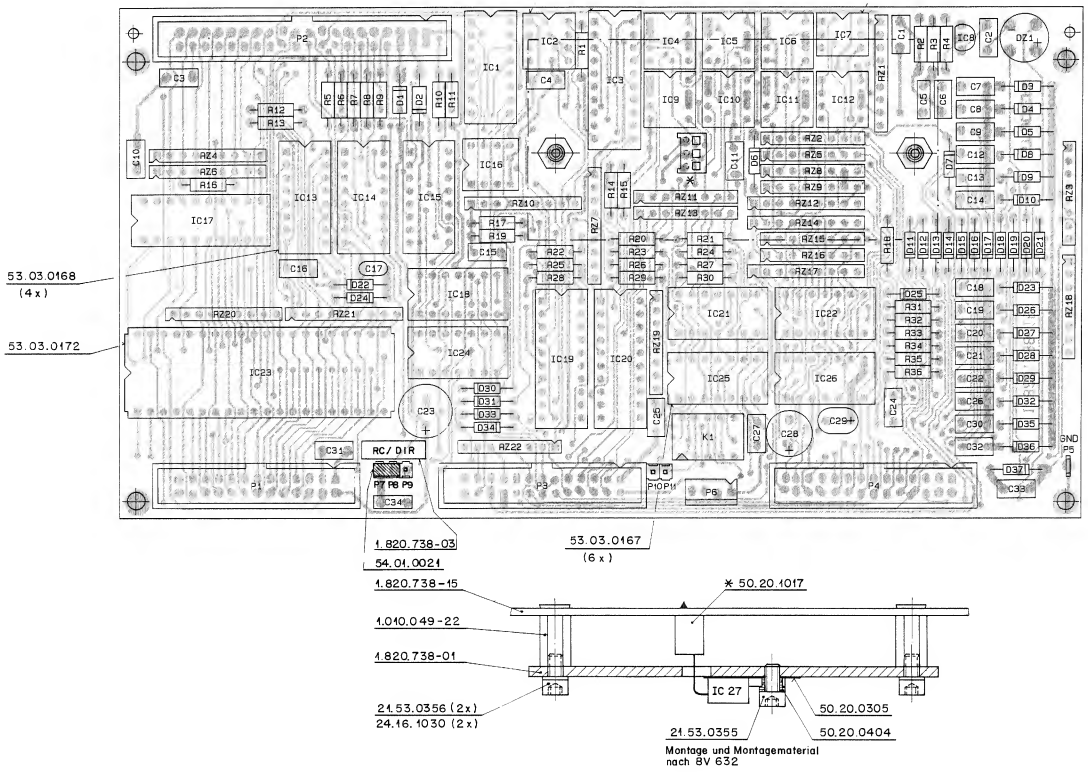

IND.	POS.NO.	PART NO.	VALUE	SPECIFICATIONS / EQUIVALENT	MANUF.
	P....8	54.01.0020	Connector	1 contact , .63*.63, H=5.8/3.4	
	P....9	54.01.0020	Connector	1 contact , .63*.63, H=5.8/3.4	
	P....10	54.01.0020	Connector	1 contact , .63*.63, H=5.8/3.4	
	P....11	54.01.0020	Connector	1 contact , .63*.63, H=5.8/3.4	
	R....1	57.11.3151	150 Ohm	2%	
	R....2	57.11.3472	4.7 kOhm	2%	
	R....3	57.11.3103	10 kOhm	2%	
	R....4	57.11.3560	56 Ohm	2%	
	R....5	57.11.3331	330 Ohm	2%	
	R....6	57.11.3101	100 Ohm	2%	
	R....7	57.11.3331	330 Ohm	2%	
	R....8	57.11.3331	330 Ohm	2%	
	R....9	57.11.3331	330 Ohm	2%	
	R....10	57.11.3331	330 Ohm	2%	
	R....11	57.11.3102	1 kOhm	2%	
	R....12	57.11.3151	150 Ohm	2%	
	R....13	57.11.3151	150 Ohm	2%	
	R....14	57.11.3181	180 Ohm	1%	
	R....15	57.11.3332	3.3 kOhm	2%	
	R....16	57.11.3151	150 Ohm	2%	
	R....17	57.11.3151	150 Ohm	2%	
	R....18	57.11.5155	1.5 MOhm	5%	
	R....19	57.11.3151	150 Ohm	2%	
	R....20	57.11.5155	1.5 MOhm	5%	
	R....21	57.11.5155	1.5 MOhm	5%	
	R....22	57.11.5155	1.5 MOhm	5%	
	R....23	57.11.5155	1.5 MOhm	5%	
	R....24	57.11.5155	1.5 MOhm	5%	
	R....25	57.11.3104	100 kOhm	2%	
	R....26	57.11.5155	1.5 MOhm	5%	
	R....27	57.11.5155	1.5 MOhm	5%	
	R....28	57.11.3102	1 kOhm	2%	
	R....29	57.11.5155	1.5 MOhm	5%	
	R....30	57.11.5155	1.5 MOhm	5%	
	R....31	57.11.5155	1.5 MOhm	5%	
	R....32	57.11.5155	1.5 MOhm	5%	

IND.	POS.NO.	PART NO.	VALUE	SPECIFICATIONS / EQUIVALENT	MANUF.
	R....33	57.11.5155	1.5 MOhm	5%	
	R....34	57.11.5155	1.5 MOhm	5%	
	R....35	57.11.5155	1.5 MOhm	5%	
	R....36	57.11.3332	3.3 kOhm	2%	
	RZ....1	57.88.4103	Network,	8 * 10 KOhm, 2%, single line	
	RZ....2	57.88.2220	Network,	4 * 22 Ohm, 2%, single line	
	RZ....3	57.88.2472	Network,	4 * 4.7 KOhm, 2%, single line	
	RZ....4	57.88.4332	Network,	8 * 3.3 kOhm, 5%, single line	
	RZ....5	57.88.2220	Network,	4 * 22 Ohm, 2%, single line	
	RZ....6	57.88.4332	Network,	8 * 3.3 kOhm, 5%, single line	
	RZ....7	57.88.4103	Network,	8 * 10 KOhm, 2%, single line	
	RZ....8	57.88.2104	Network,	4 * 100 KOhm, 2%, single line	
	RZ....9	57.88.2472	Network,	4 * 4.7 KOhm, 2%, single line	
	RZ....10	57.88.4332	Network,	8 * 3.3 kOhm, 5%, single line	
	RZ....11	57.88.2220	Network,	4 * 22 Ohm, 2%, single line	
	RZ....12	57.88.4472	Network,	8 * 4.7 MOhm, 2%, single line	
	RZ....13	57.88.2104	Network,	4 * 100 KOhm, 2%, single line	
	RZ....14	57.88.4472	Network,	8 * 4.7 KOhm, 2%, single line	
	RZ....15	57.88.2104	Network,	4 * 100 KOhm, 2%, single line	
	RZ....16	57.88.2472	Network,	4 * 4.7 KOhm, 2%, single line	
	RZ....17	57.88.4103	Network,	8 * 10 KOhm, 2%, single line	
	RZ....18	57.88.2472	Network,	4 * 4.7 KOhm, 2%, single line	
	RZ....19	57.88.2104	Network,	4 * 100 KOhm, 2%, single line	
	RZ....20	57.88.4332	Network,	8 * 3.3 kOhm, 5%, single line	
	RZ....21	57.88.4332	Network,	8 * 3.3 kOhm, 5%, single line	
	RZ....22	57.88.2220	Network,	4 * 22 Ohm, 2%, single line	

IND.	POS.NO.	PART NO.	VALUE	SPECIFICATIONS / EQUIVALENT	MANUF.
	C....1	59.40.0683	68 nF	-10%, PETP	
	C....2	59.40.0104	0.1 uF	-10%, PETP	
	C....3	59.40.0683	68 nF	-10%, PETP	
	C....4	59.40.0683	68 nF	-10%, PETP	
	C....5	59.40.0103	10 nF	-10%, PETP	
	C....6	59.40.0683	68 nF	-10%, PETP	
	C....7	59.40.0104	0.1 uF	-10%, PETP	
	C....8	59.40.0104	0.1 uF	-10%, PETP	
	C....9	59.40.0104	0.1 uF	-10%, PETP	
	C....10	59.40.0683	68 nF	-10%, PETP	
	C....11	59.40.0683	68 nF	-10%, PETP	
	C....12	59.40.0104	0.1 uF	-10%, PETP	
	C....13	59.40.0104	0.1 uF	-10%, PETP	
	C....14	59.40.0104	0.1 uF	-10%, PETP	
	C....15	59.40.0683	68 nF	-10%, PETP	
	C....16	59.40.0683	68 nF	-10%, PETP	
	C....17	59.45.4101	100 pF	5%, CER	
	C....18	59.40.0104	0.1 uF	-10%, PETP	
	C....19	59.40.0104	0.1 uF	-10%, PETP	
	C....20	59.40.0104	0.1 uF	-10%, PETP	
	C....21	59.40.0104	0.1 uF	-10%, PETP	
	C....22	59.40.0104	0.1 uF	-10%, PETP	
	C....23	59.22.3471	470 uF	-20%, 10V, EL	
	C....24	59.40.0683	68 nF	-10%, PETP	
	C....25	59.40.0683	68 nF	-10%, PETP	
	C....26	59.40.0104	0.1 uF	-10%, PETP	
	C....27	59.40.0683	68 nF	-10%, PETP	
	C....28	59.41.6470	47 uF	-20%, 40V, EL	
	C....29	59.42.1220	22 uF	-20%, 10V, SAL	
	C....30	59.40.0104	0.1 uF	-10%, PETP	
	C....31	59.40.0104	0.1 uF	-10%, PETP	
	C....32	59.40.0104	0.1 uF	-10%, PETP	
	C....33	59.40.0104	0.1 uF	-10%, PETP	
	C....34	59.40.0103	10 nF	-10%, PETP	
	D....1	50.04.0122	1N 4001	1N4004	Mot
	D....2	50.04.0512	1N 5818	1N 5819	Mot

IND.	POS.NO.	PART NO.	VALUE	SPECIFICATIONS / EQUIVALENT	MANUF.
	D....3	50.04.0127	BAT 85	BAS 40-02	Ph,Sie
	D....4	50.04.0127	BAT 85	BAS 40-02	Ph,Sie
	D....5	50.04.0127	BAT 85	BAS 40-02	Ph,Sie
	D....6	50.04.0125	1N 4448		Fc,ITT,Ph,Sem
	D....7	50.04.0125	1N 4448		Fc,ITT,Ph,Sem
	D....8	50.04.0127	BAT 85	BAS 40-02	Ph,Sie
	D....9	50.04.0127	BAT 85	BAS 40-02	Ph,Sie
	D....10	50.04.0127	BAT 85	BAS 40-02	Ph,Sie
	D....11	50.04.0125	1N 4448		Fc,ITT,Ph,Sem
	D....12	50.04.0125	1N 4448		Fc,ITT,Ph,Sem
	D....13	50.04.0125	1N 4448		Fc,ITT,Ph,Sem
	D....14	50.04.0125	1N 4448		Fc,ITT,Ph,Sem
	D....15	50.04.0125	1N 4448		Fc,ITT,Ph,Sem
	D....16	50.04.0125	1N 4448		Fc,ITT,Ph,Sem
	D....17	50.04.0125	1N 4448		Fc,ITT,Ph,Sem
	D....18	50.04.0125	1N 4448		Fc,ITT,Ph,Sem
	D....19	50.04.0125	1N 4448		Fc,ITT,Ph,Sem
	D....20	50.04.0125	1N 4448		Fc,ITT,Ph,Sem
	D....21	50.04.0125	1N 4448		Fc,ITT,Ph,Sem
	D....22	50.04.0125	1N 4448		Fc,ITT,Ph,Sem
	D....23	50.04.0127	BAT 85	BAS 40-02	Ph,Sie
	D....24	50.04.0125	1N 4448		Fc,ITT,Ph,Sem
	D....25	50.04.1108	5.6 V Z	BZX85 C 5V6, BZX55 C 5V6, ZPD 5.6	ITT,Sem
	D....26	50.04.0127	BAT 85	BAS 40-02	Ph,Sie
	D....27	50.04.0127	BAT 85	BAS 40-02	Ph,Sie
	D....28	50.04.0127	BAT 85	BAS 40-02	Ph,Sie
	D....29	50.04.0127	BAT 85	BAS 40-02	Ph,Sie
	D....30	50.04.0125	1N 4448		Fc,ITT,Ph,Sem
	D....31	50.04.0125	1N 4448		Fc,ITT,Ph,Sem
	D....32	50.04.0127	BAT 85		Ph,Sie
	D....33	50.04.0125	1N 4448	BAS 40-02	Fc,ITT,Ph,Sem
	D....34	50.04.0125	1N 4448		Fc,ITT,Ph,Sem
	D....35	50.04.0127	BAT 85	BAS 40-02	Ph,Sie
	D....36	50.04.0127	BAT 85	BAS 40-02	Ph,Sie
	D....37	50.04.0127	BAT 85	BAS 40-02	Ph,Sie
	DZ....1	70.01.0223		B 250 C 800 SI	GI,Mot

IND.	POS.NO.	PART NO.	VALUE	SPECIFICATIONS / EQUIVALENT	MANUF.
	IC....1	50.17.1174	74 HC 174	.. 74 HC 174	Mot,NS,Ph,RCA,SGS,TI,To
	IC....2	50.15.0114	uA9637ATC	uA9637ATCP	Fc,TI
	IC....3	50.17.1574	74 HC 574	.. 74 HC 574	Mot,NS,Ph,RCA,SGS,TI,To
	IC....4			not used	TI
	IC....5	50.05.0227	SN 75462P		TI
	IC....6	50.05.0227	SN 75462P		TI
	IC....7	50.99.0126	4N 26	4N 26	Mot
	IC....8	50.10.0108	LM 317 LZ		NS,Mot
	IC....9	50.05.0227	SN 75462P		TI
	IC....10	50.05.0227	SN 75462P		TI
	IC....11	50.05.0203	SN 75463P		TI
	IC....12	50.05.0203	SN 75463P		TI
	IC....13	50.17.1139	74 HC 139	.. 74 HC 139 .	Mot,NS,Ph,RCA,SGS,TI,To
	IC....14	50.06.0156	74 LS 156	SN 74 LS 156 N	Fc,NS,TI
	IC....15	50.15.0104	MC 3486 P	DS 3486 N	Mot,NS
	IC....16	50.05.0227	SN 75462P		TI
	IC....17	50.17.7245	74ACT 245	.. 74ACT 245 .	Ph,Sie,Tf
	IC....18	50.17.1010	74 HC 10	.. 74 HC 10 .	Mot,NS,Ph,RCA,SGS,TI,To
	IC....19	50.17.1541	74 HC 541	.. 74 HC 541 .	Mot,NS,Ph,RCA,SGS,TI,To
	IC....20	50.17.1541	74 HC 541	.. 74 HC 541 .	Mot,NS,Ph,RCA,SGS,TI,To
	IC....21	50.11.0104	LM 339 AN	339 A,UA 339	Fc,Mot,NS,The
	IC....22	50.11.0104	LM 339 AN	339 A,UA 339	Fc,Mot,NS,The
	IC....23	50.16.0111	IP 8279-5	M5L 8279 P-5	It,Mi
	IC....24	50.17.1014	74 HC 14	.. 74 HC 14 .	Mot,NS,Ph,RCA,TI,To
	IC....25	50.11.0104	LM 339 AN	339 A,UA 339	Fc,Mot,NS,The
	IC....26	50.11.0104	LM 339 AN	339 A,UA 339	Fc,Mot,NS,The
	IC....27	50.10.0104	LM 317 T	LM 317 SP	NS,Mot,TI,The
	K....1	56.04.0197	24 V 2*U	125V/ 2 A, AG/AU	
	P....1	54.14.2003	Connector	26 contacts, flat cable	
	P....2	54.14.2004	Connector	40 contacts, flat cable	
	P....3	54.14.2003	Connector	26 contacts, flat cable	
	P....4	54.14.2003	Connector	26 contacts, flat cable	
	P....5	54.02.0320	Connector	1 contact , 2.8*0.8, flat	
	P....6	54.99.0213	Connector	4 contacts, straight, AMP	
	P....7	54.01.0020	Connector	1 contact , .63*.63, H=5.8/3.4	

IND.	POS.NO.	PART NO.	VALUE	SPECIFICATIONS / EQUIVALENT	MANUF.

El=Electrolytic, PETP=Polyester, CER=Ceramic, SAL=Solid Aluminium

MANUFACTURERS: Fc=Fairchild, GI=General Instruments, It=Intel, Mi=Mitsubishi, Mot=Motorola, NS=National Semiconductors, Ph=Philips, RCA=RCA Corporation, SGS=SGS/Ates, The=Thomson, TI=Texas Instruments, To=Toshiba.

ORIG 91/02/15

SPOOLING MOTOR DRIVER 1.820.759.85

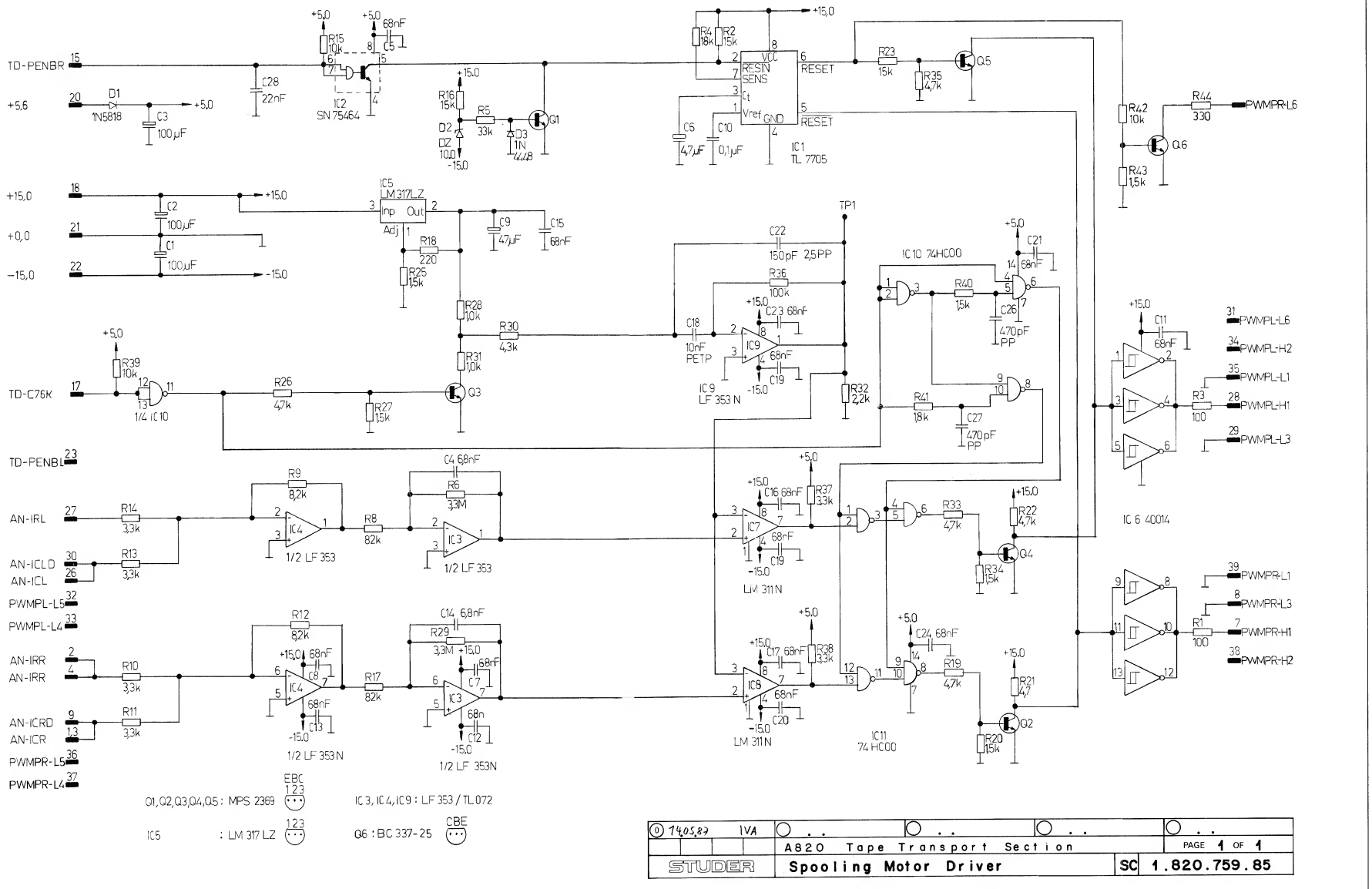

SPOOLING MOTOR DRIVER 1.820.759.85

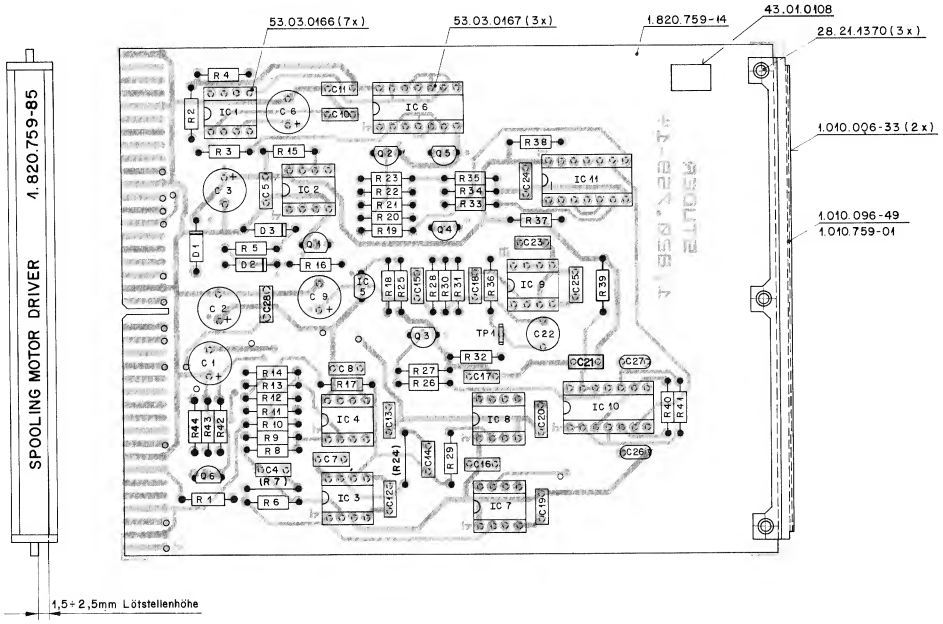

IND.	POS.NO.	PART NO.	VALUE	SPECIFICATIONS / EQUIVALENT	MANUF.
	C....1	59.22.5101	100 uF	25V, El	
	C....2	59.22.5101	100 uF	25V, El	
	C....3	59.22.5101	100 uF	El	
	C....4	59.06.0682	6.8 nF	10%	
	C....5	59.06.0683	68 nF		
	C....6	59.26.5479	4.7 uF	25V, El	
	C....7	59.06.0683	68 nF		
	C....8	59.06.0683	68 nF		
	C....9	59.22.5470	47 uF	25V, El	
	C....10	59.06.0104	100 nF		
	C....11	59.06.0683	68 nF		
	C....12	59.06.0683	68 nF		
	C....13	59.06.0683	68 nF		
	C....14	59.06.0682	6.8 nF	10%	
	C....15	59.06.0683	68 nF		
	C....16	59.06.0683	68 nF		
	C....17	59.06.0683	68 nF		
	C....18	59.06.0103	10 nF		
	C....19	59.06.0683	68 nF		
	C....20	59.06.0683	68 nF		
	C....21	59.06.0683	68 nF		
	C....22	59.05.2151	150 pF	5%	
	C....23	59.06.0683	68 nF		
	C....24	59.06.0683	68 nF		
	C....25	59.06.0683	68 nF		
	C....26	59.34.5471	470 pF	5%	
	C....27	59.34.5471	470 pF	5%	
	C....28	59.06.0223	22 nF		
	D....1	50.04.0512	1N 5818	1N 5819	Mot
	D....2	50.04.1114	10 V Z		ITT,See
	D....3	50.04.0125	1N 4448		Fc,ITT,Ph,Sez,Tf
	IC....1	50.11.0122	TL 7705		TI
	IC....2	50.05.0204	SN 75464P	DS 75464 N	NS,TI
	IC....3	50.09.0101	TL 072 CP	LF 353 N	NS,TI
	IC....4	50.09.0101	TL 072 CP	LF 353 N	NS,TI

5 T U D E R (00) 87/05/14 BD SPOOLING MOTOR DRIVER PL 1.820.759.85 PAGE 1

IND.	POS.NO.	PART NO.	VALUE	SPECIFICATIONS / EQUIVALENT	MANUF.
	IC....5	50.10.0108	LM 317 LZ		Mot,NS
	IC....6	50.07.0014	40014 BPC	MC14584 BPC	Mot,NS,Ph,To
	IC....7	50.11.0114	LM 311 N	LM 311 P	Mot,NS
	IC....8	50.11.0114	LM 311 N	LM 311 P	Mot,NS
	IC....9	50.09.0101	TL 072 CP	LF 353 N	NS,TI
	IC....10	50.17.1000	74 HC 00		Mot,NS,Ph,RCA,SGS,TI,To
	IC....11	50.17.1000	74 HC 00		Mot,NS,Ph,RCA,SGS,TI,To
	Q....1	50.03.0508	MPS 2369		Mot
	Q....2	50.03.0508	MPS 2369		Mot
	Q....3	50.03.0508	MPS 2369		Mot
	Q....4	50.03.0508	MPS 2369		Mot
	Q....5	50.03.0508	MPS 2369		Mot
	Q....6	50.03.0340	BC 337-25		ITT,Ph,Sie
	R....1	57.11.4101	100 Ohm		
	R....2	57.11.4153	15 kOhm		
	R....3	57.11.4101	100 Ohm		
	R....4	57.11.4183	18 kOhm	5%	
	R....5	57.11.4333	33 kOhm	5%	
	R....6	57.11.5335	3.3 MOhm		
	R....7		not used	(REPLACED BY WIRE BRIDGE)	
	R....8	57.11.4823	82 kOhm	5%	
	R....9	57.11.4822	8.2 kOhm	5%	
	R....10	57.11.4332	3.3 kOhm	5%	
	R....11	57.11.4332	3.3 kOhm	5%	
	R....12	57.11.4822	8.2 kOhm	5%	
	R....13	57.11.4332	3.3 kOhm	5%	
	R....14	57.11.4332	3.3 kOhm	5%	
	R....15	57.11.4103	10 kOhm		
	R....16	57.11.4153	15 kOhm	5%	
	R....17	57.11.4823	82 kOhm	5%	
	R....18	57.11.4221	220 Ohm	2%	
	R....19	57.11.4472	4.7 kOhm	5%	
	R....20	57.11.4152	1.5 kOhm	5%	
	R....21	57.11.4472	4.7 kOhm	5%	
	R....22	57.11.4472	4.7 kOhm	5%	

5 T U D E R (00) 87/05/14 BD SPOOLING MOTOR DRIVER PL 1.820.759.85 PAGE 2

IND.	POS.NO.	PART NO.	VALUE	SPECIFICATIONS / EQUIVALENT	MANUF.
	R....23	57.11.4153	15 kOhm	5%	
	R....24		not used	(REPLACED BY WIRE BRIDGE)	
	R....25	57.11.4152	1.5 kOhm	2%	
	R....26	57.11.4472	4.7 kOhm	5%	
	R....27	57.11.4152	1.5 kOhm	5%	
	R....28	57.11.4102	1 kOhm	2%	
	R....29	57.11.5335	3.3 MOhm		
	R....30	57.11.3432	4.3 kOhm	1%	
	R....31	57.11.4102	1 kOhm	2%	
	R....32	57.11.4222	2.2 kOhm	5%	
	R....33	57.11.4472	4.7 kOhm	5%	
	R....34	57.11.4152	1.5 kOhm	5%	
	R....35	57.11.4472	4.7 kOhm	5%	
	R....36	57.11.4104	100 kOhm		
	R....37	57.11.4332	3.3 kOhm	5%	
	R....38	57.11.4332	3.3 kOhm	5%	
	R....39	57.11.4103	10 kOhm		
	R....40	57.11.4152	1.5 kOhm	2%	
	R....41	57.11.4182	1.8 kOhm	2%	
	R....42	57.11.4103	10 kOhm	5%	
	R....43	57.11.4152	1.5 kOhm	5%	
	R....44	57.11.4331	330 Ohm	5%	

El=Electrolytic

Manufacturer: Fc=Fairchild, ITT=Intermetall, Mot=Motorola,
NS=National Semiconductors, Ph=Philips,
RCA=RCA Corporation of America, Sez=Sescosem, SGS=SGS/Ates,
Tf=Telefunken, TI=Texas Instruments, To=Toshiba.

ORIG 87/05/14

5 T U D E R (00) 87/05/14 BD SPOOLING MOTOR DRIVER PL 1.820.759.85 PAGE 3

SPOOLING MOTOR CONTROLLER 1.820.760.81

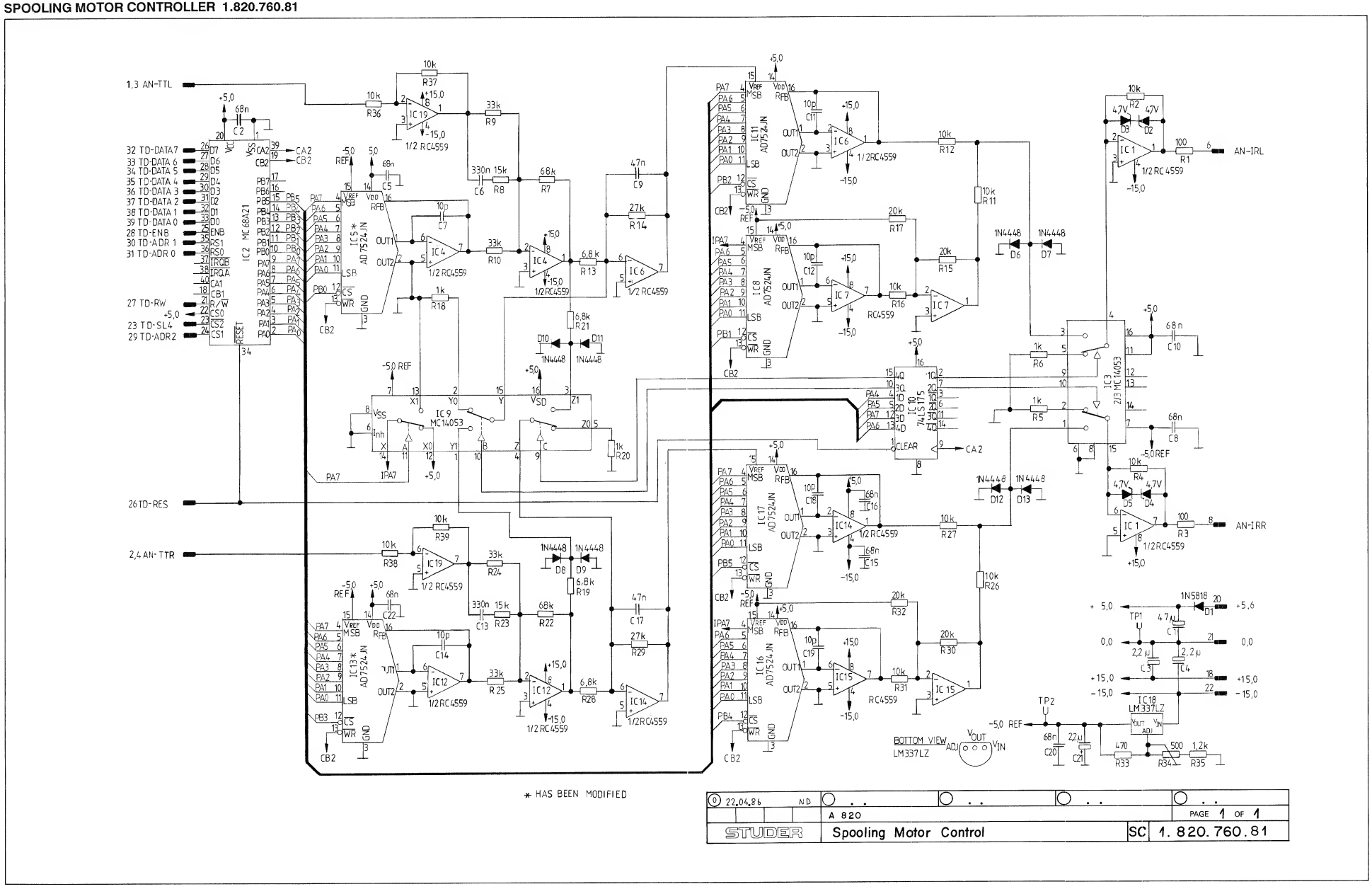

SPOOLING MOTOR CONTROLLER 1.820.760.81

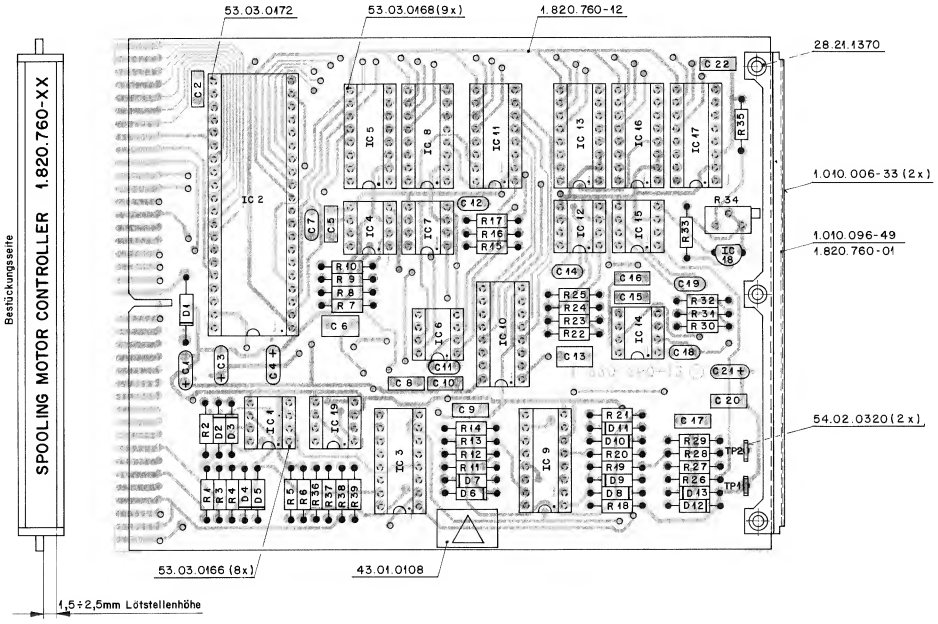

IND.	POS.NO.	PART NO.	VALUE	SPECIFICATIONS / EQUIVALENT	MANUF.
	C.....1	59.26.0470	47 uF	6.3V, Sal	
	C.....2	59.06.0683	68 nF		
	C.....3	59.26.5229	2.2 uF	25V, Sal	
	C.....4	59.26.5229	2.2 uF	25V, Sal	
	C.....5	59.06.0683	68 nF		
	C.....6	59.06.0334	330 nF	10%	
	C.....7	59.34.1100	10 pF	Ce	
	C.....8	59.06.0683	68 nF		
	C.....9	59.06.0473	47 nF	10%	
	C....10	59.06.0683	68 nF		
	C....11	59.34.1100	10 pF	Ce	
	C....12	59.34.1100	10 pF	Ce	
	C....13	59.06.0334	330 nF	10%	
	C....14	59.34.1100	10 pF	Ce	
	C....15	59.06.0683	68 nF		
	C....16	59.06.0683	68 nF		
	C....17	59.06.0473	47 nF	10%	
	C....18	59.34.1100	10 pF	Ce	
	C....19	59.34.1100	10 pF	Ce	
	C....20	59.06.0683	68 nF		
	C....21	59.26.5229	2.2 uF	25V, Sal	
	C....22	59.06.0683	68 nF		
	D.....1	50.04.0512	1N 5818	1N 5819	Mot
	D.....2	50.04.1123	4.7 V, Z	BZX83C 4V7, BZX55C 4V7, ZPD 4.7	ITT,See
	D.....3	50.04.1123	4.7 V, Z	BZX83C 4V7, BZX55C 4V7, ZPD 4.7	ITT,See
	D.....4	50.04.1123	4.7 V, Z	BZX83C 4V7, BZX55C 4V7, ZPD 4.7	ITT,See
	D.....5	50.04.1123	4.7 V, Z	BZX83C 4V7, BZX55C 4V7, ZPD 4.7	ITT,See
	D.....6	50.04.0125	1N 4448		
	D.....7	50.04.0125	1N 4448		
	D.....8	50.04.0125	1N 4448		
	D.....9	50.04.0125	1N 4448		
	D....10	50.04.0125	1N 4448		
	D....11	50.04.0125	1N 4448		
	D....12	50.04.0125	1N 4448		
	D....13	50.04.0125	1N 4448		

S T U D E R (00) 86/05/05 ND SPOOLING MOTOR CONTROLLER PL 1.820.760.81 PAGE 1

IND.	POS.NO.	PART NO.	VALUE	SPECIFICATIONS / EQUIVALENT	MANUF.
	IC....1	50.09.0107	RC 4559 NB	uPC 4559, slew rate min. 1.5 V/us	NEC,Ra
	IC....2	50.16.0106	MC68 A 21P	68B A 21P, P68 A 21P	AMI,Fa,Mot
	IC....3	50.07.0015	MC14053BCP	... 4053 ...	Mot,NS,Ph,RCA,To
	IC....4	50.09.0107	RC 4559 NB	uPC 4559, slew rate min. 1.5 V/us	NEC,Ra
	IC....5	50.07.0002	AD 7524 JN	MP 7524 JN	ADI,MPS
	IC....6	50.09.0107	RC 4559 NB	uPC 4559, slew rate min. 1.5 V/us	NEC,Ra
	IC....7	50.09.0107	RC 4559 NB	uPC 4559, slew rate min. 1.5 V/us	NEC,Ra
	IC....8	50.07.0002	AD 7524 JN	MP 7524 JN	ADI,MPS
	IC....9	50.07.0015	MC14053BCP	... 4053 ...	Mot,NS,Ph,RCA,To
	IC....10	50.06.0175	74 LS 175	.. 74 LS 175 .	NSC,Sig,TI
	IC....11	50.07.0002	AD 7524 JN	MP 7524 JN	ADI,MPS
	IC....12	50.09.0107	RC 4559 NB	uPC 4559, slew rate min. 1.5 V/us	NEC,Ra
	IC....13	50.07.0002	AD 7524 JN	MP 7524 JN	ADI,MPS
	IC....14	50.09.0107	RC 4559 NB	uPC 4559, slew rate min. 1.5 V/us	NEC,Ra
	IC....15	50.09.0107	RC 4559 NB	uPC 4559, slew rate min. 1.5 V/us	NEC,Ra
	IC....16	50.07.0002	AD 7524 JN	MP 7524 JN	ADI,MPS
	IC....17	50.07.0002	AD 7524 JN	MP 7524 JN	ADI,MPS
	IC....18	50.10.0109	LM 337 LZ		NS
	IC....19	50.09.0107	RC 4559 NB	uPC 4559, slew rate min. 1.5 V/us	NEC,Ra
	TP....1	54.02.0320		Test point	
	TP....2	54.02.0320		Test point	
	R.....1	57.11.4101	100 Ohm		
	R.....2	57.11.4103	10 kOhm	5%	
	R.....3	57.11.4101	100 Ohm	5%	
	R.....4	57.11.4103	10 kOhm	5%	
	R.....5	57.11.4102	1 kOhm	5%	
	R.....6	57.11.4102	1 kOhm	5%	
(00)	R.....7	57.11.4333	33 kOhm	5%	
	R.....7	57.11.4683	68 kOhm	5%	
	R.....8	57.11.4153	15 kOhm	5%	
	R.....9	57.11.4333	33 kOhm	5%	
	R....10	57.11.4333	33 kOhm	5%	
	R....11	57.11.4103	10 kOhm	5%	
	R....12	57.11.4103	10 kOhm	5%	
	R....13	57.11.4682	6.8 kOhm	5%	

J T U D E R (00) 86/05/05 ND SPOOLING MOTOR CONTROLLER PL 1.820.760.81 PAGE 2

IND.	POS.NO.	PART NO.	VALUE	SPECIFICATIONS / EQUIVALENT	MANUF.
	R....14	57.11.4273	27 kOhm	5%	
	R....15	57.11.3203	20 kOhm	5%	
	R....16	57.11.4103	10 kOhm	5%	
	R....17	57.11.3203	20 kOhm	5%	
	R....18	57.11.4102	1 kOhm	5%	
	R....19	57.11.4682	6.8 kOhm	5%	
	R....20	57.11.4102	1 kOhm	5%	
	R....21	57.11.4682	6.8 kOhm	5%	
	R....22	57.11.4683	68 kOhm	5%	
	R....23	57.11.4153	15 kOhm	5%	
	R....24	57.11.4333	33 kOhm	5%	
	R....25	57.11.4333	33 kOhm	5%	
	R....26	57.11.4103	10 kOhm	5%	
	R....27	57.11.4103	10 kOhm	5%	
	R....28	57.11.4682	6.8 kOhm	5%	
	R....29	57.11.4273	27 kOhm	5%	
	R....30	57.11.3203	20 kOhm	5%	
	R....31	57.11.4103	10 kOhm	5%	
	R....32	57.11.3203	20 kOhm	5%	
	R....33	57.11.4471	470 Ohm	5%	
	R....34	58.05.0501	500 Ohm	see note 1	
	R....35	57.11.4122	1.2 kOhm	5%	
	R....36	57.11.4103	10 kOhm	5%	
	R....37	57.11.4103	10 kOhm	5%	
	R....38	57.11.4103	10 kOhm	5%	
	R....39	57.11.4103	10 kOhm	5%	

S T U D E R (00) 86/05/05 ND SPOOLING MOTOR CONTROLLER PL 1.820.760.81 PAGE 3

IND.	POS.NO.	PART NO.	VALUE	SPECIFICATIONS / EQUIVALENT	MANUF.

Note 1 - Potentiometer 500 Ohm
Bourns nr. 3296 Z - 1 - 501
Conteles nr. 183 XZ 501
Spectrol nr. 64 Z 501 T 000
Murata nr. POT 3105 Z - 1 - 501

Ce=Ceramic, Sal=Solid aluminium

MANUFACTURER: ADI=Analog Devices Inc., AMI=American Microsystem Inc., Fa=Fairchild, Mot=Motorola, MPS=Micropower Semicond., NEC=Nippon Electric Corp., NS=National Semiconductors, Ph=Philips, Ra=Raytheon, RCA=RCA Corp. of America, Sig=Signetics, TI=Texas Instruments

ORIG 86/05/05

S T U D E R (00) 86/05/05 ND SPOOLING MOTOR CONTROLLER PL 1.820.760.81 PAGE 4

TAPE DECK PERIPHERY CONTROLLER 1.820.762.81

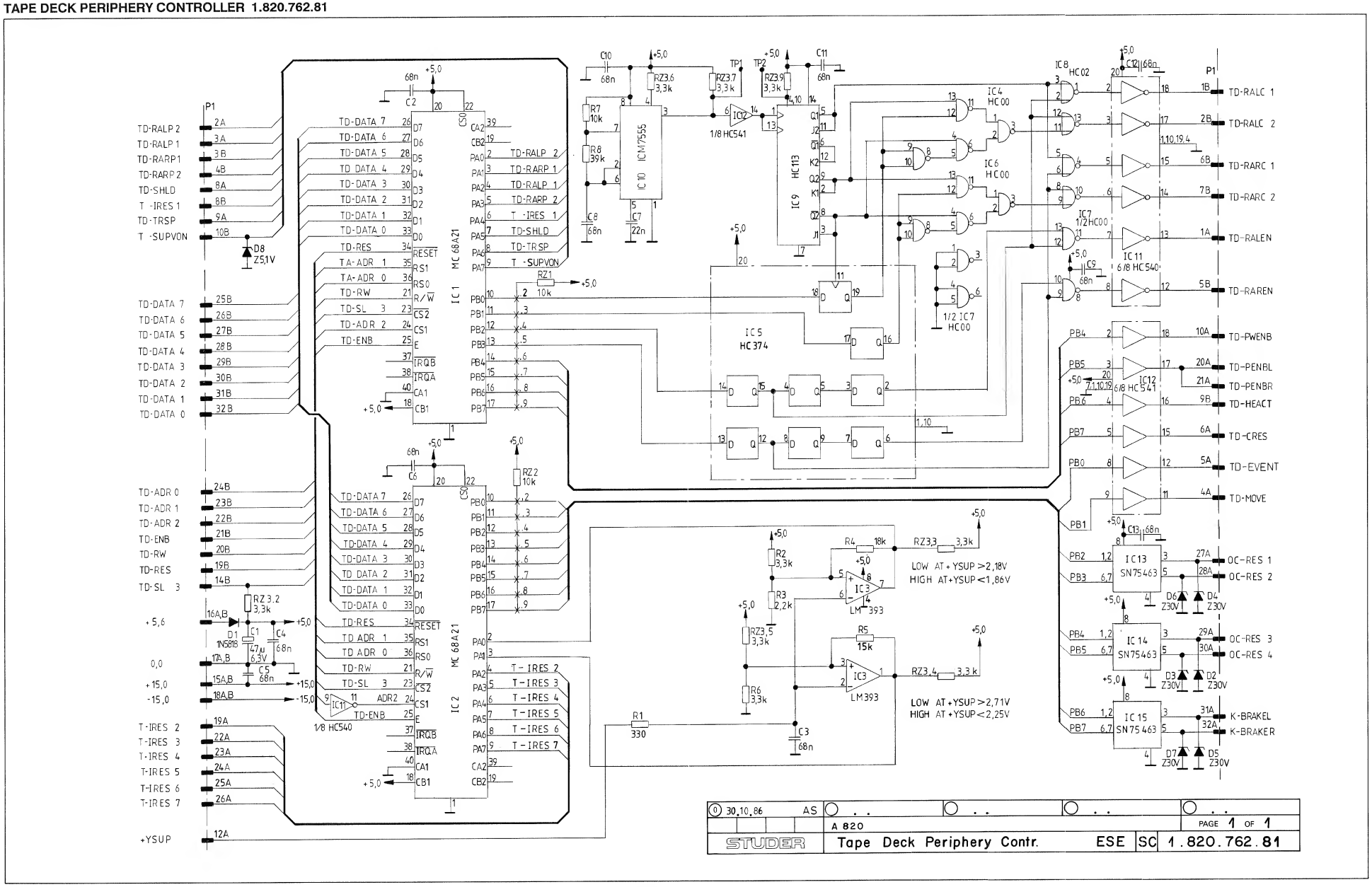

TAPE DECK PERIPHERY CONTROLLER 1.820.762.81

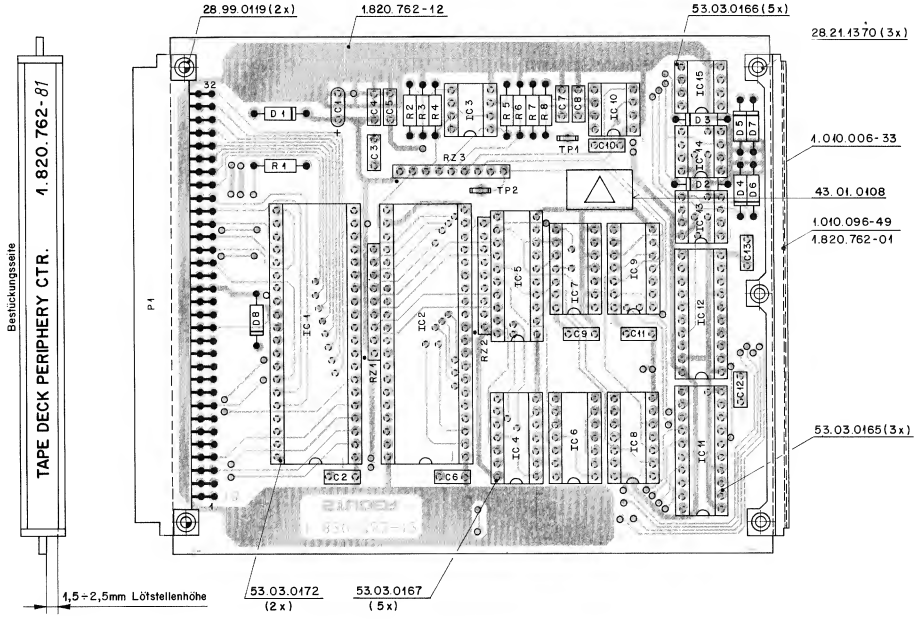

IND.	POS.NO.	PART NO.	VALUE	SPECIFICATIONS / EQUIVALENT	MANUF.
	C.....1	59.26.0470	47 uF	20%, 6.3V	
	C.....2	59.06.0683	68 nF	20%	
	C.....3	59.06.0683	68 nF	20%	
	C.....4	59.06.0683	68 nF	20%	
	C.....5	59.06.0683	68 nF	20%	
	C.....6	59.06.0683	68 nF	20%	
	C.....7	59.06.0223	22 nF	10%	
	C.....8	59.06.5683	68 nF	5%	
	C.....9	59.06.0683	68 nF	20%	
	C.....10	59.06.0683	68 nF	20%	
	C.....11	59.06.0683	68 nF	20%	
	C.....12	59.06.0683	68 nF	20%	
	C.....13	59.06.0683	68 nF	20%	
	D.....1	50.04.0512	1N 5818	1N 5819	Mot
	D.....2	50.04.1125	30 V Z	ZPD 30	ITT
	D.....3	50.04.1125	30 V Z	ZPD 30	ITT
	D.....4	50.04.1125	30 V Z	ZPD 30	ITT
	D.....5	50.04.1125	30 V Z	ZPD 30	ITT
	D.....6	50.04.1125	30 V Z	ZPD 30	ITT
	D.....7	50.04.1125	30 V Z	ZPD 30	ITT
	D.....8	50.04.1112	5.1 V Z	BZX85C 5V1, BZX55C 5V1, ZPD 5.1	ITT,Sea
	IC....1	50.16.0106	MC68 A 21P	568 A 21P	AMI,Fc,Mot
	IC....2	50.16.0106	MC68 A 21P	568 A 21P	AMI,Fc,Mot
	IC....3	50.05.0283	LM 393 N	LM 393 P	NS,TI
	IC....4	50.17.1000	74 HC 00	.. 74 HC 00 .	Mot,NS,TI
	IC....5	50.17.1374	74 HC 374	.. 74 HC 374 .	Mot,NS,TI
	IC....6	50.17.1000	74 HC 00	.. 74 HC 00 .	Mot,NS,TI
	IC....7	50.17.1000	74 HC 00	.. 74 HC 00 .	Mot,NS,TI
	IC....8	50.17.1002	74 HC 02	.. 74 HC 02 .	Mot,NS,TI
	IC....9	50.17.1113	74 HC 113	.. 74 HC 113 .	Mot,NS,TI
	IC...10	50.07.0036	ICM7555IPA		Is,Ma
	IC...11	50.17.1540	74 HC 540	.. 74 HC 540 .	Mot,NS,TI
	IC...12	50.17.1541	74 HC 541	.. 74 HC 541 .	Mot,NS,TI
	IC...13	50.05.0203	SN 75463 P	DS 3613 N	NS,TI
	IC...14	50.05.0203	SN 75463 P	DS 3613 N	NS,TI

IND.	POS.NO.	PART NO.	VALUE	SPECIFICATIONS / EQUIVALENT	MANUF.
	IC...15	50.05.0203	SN 75463 P	DS 3613 N	NS,TI
	P.....1	54.11.2004		2 * 32 contacts, see note 1	
	R.....1	57.11.4331	330 Ohm	10%	
	R.....2	57.11.4332	3.3 kOhm	5%	
	R.....3	57.11.4222	2.2 kOhm	5%	
	R.....4	57.11.4183	18 kOhm	5%	
	R.....5	57.11.4153	15 kOhm	5%	
	R.....6	57.11.4332	3.3 kOhm	5%	
	R.....7	57.11.4103	10 kOhm	5%	
	R.....8	57.11.4393	39 kOhm	5%	
	RZ....1	57.88.4103	10 kOhm	10%	See note 2
	RZ....2	57.88.4103	10 kOhm	10%	See note 2
	RZ....3	57.88.4332	3.3 kOhm	10%	See note 3
	TP....1	54.02.0320	test pin		
	TP....2	54.02.0320	test pin		

IND.	POS.NO.	PART NO.	VALUE	SPECIFICATIONS / EQUIVALENT	MANUF.

Note 1 - Connector:
2 * 32 Euro Print
Berndy PI 64 B 20 P00 F00 Z0
Erni 9722.563.191

Note 2 - Network:
8 * 10 kOhm, 5%, single line
Bourns 4609 X - 101 - 103
Sprague 256 CJ 103 X 2 PD
Beckmann L - 09 - 1 - R 10 kJ
Matsushita F 9 E 10 k 5%
Tama MRG C 09 X 10 k J

Note 3 - Network:
8 * 3.3 kOhm, 5%, single line
Bourns 4609 X - 101 - 332
Sprague 256 CJ 332 X 2 PD
Beckmann L - 09 - 1 - R 3.3 k J
Matsushita F 9 E 3.3 k 5%
Tama MRG C 09 X 3.3 k J

Manufacturer: AMI=American Microsystem Inc., Fc=Fairchild,
Hi=Hitachi, ITT=Intermetall, Is=Intersil, Ma=Maxim,
Mot=Motorola, NS=National Semiconductors,
Ph=Philips, Ra=Raytheon, RCA=RCA Corporation of America,
Sig=Signetics, TI=Texas Instruments, To=Toshiba.

ORIG 86/10/30

TAPE DECK SERIAL INTERFACE 1.820.763.83

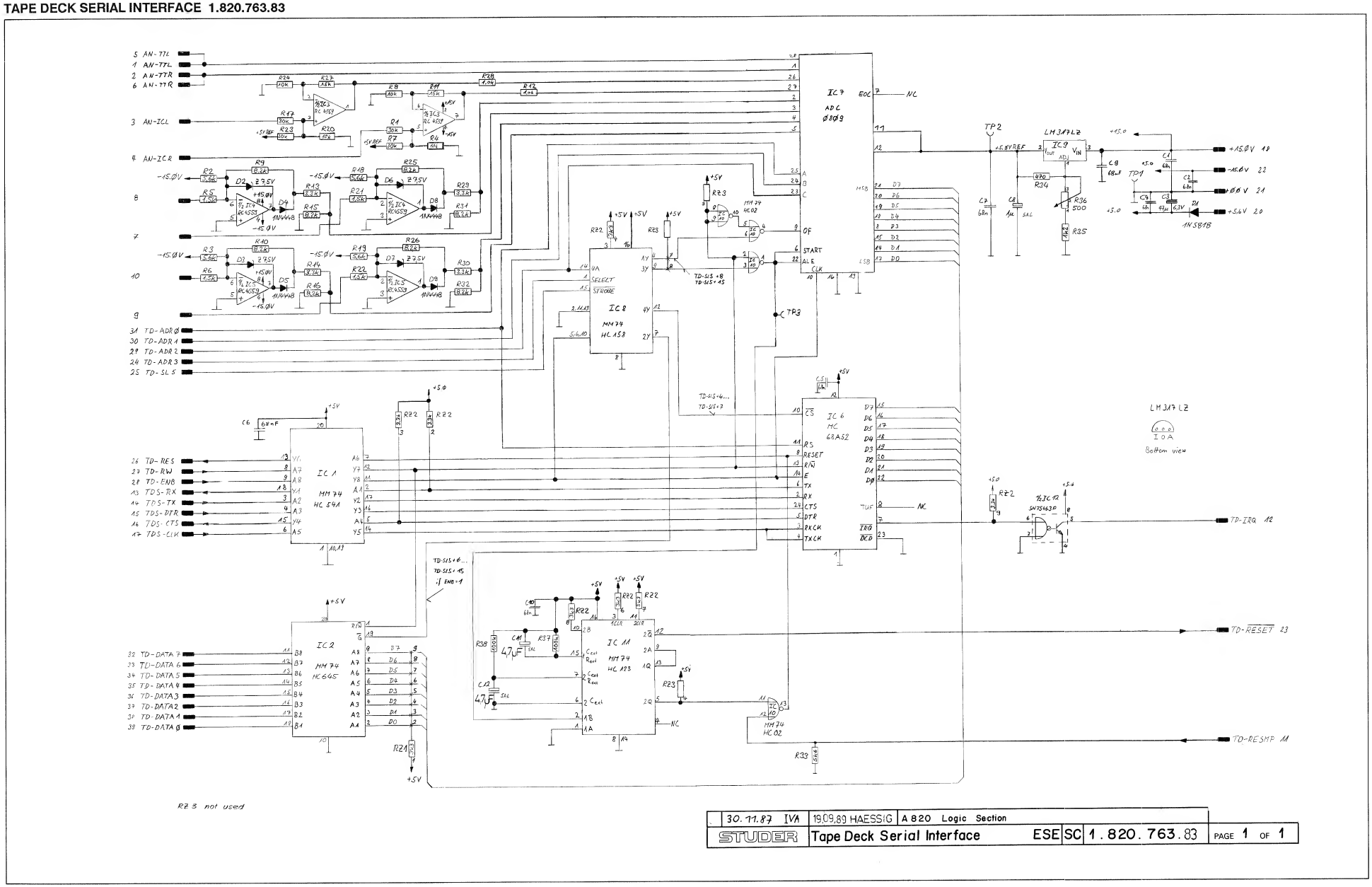

30.11.87 IVA	19.09.89 HAESSIG	A 820 Logic Section			
STUDER	Tape Deck Serial Interface	ESE	SC	1.820.763.83	PAGE 1 OF 1

TAPE DECK SERIAL INTERFACE 1.820.763.83

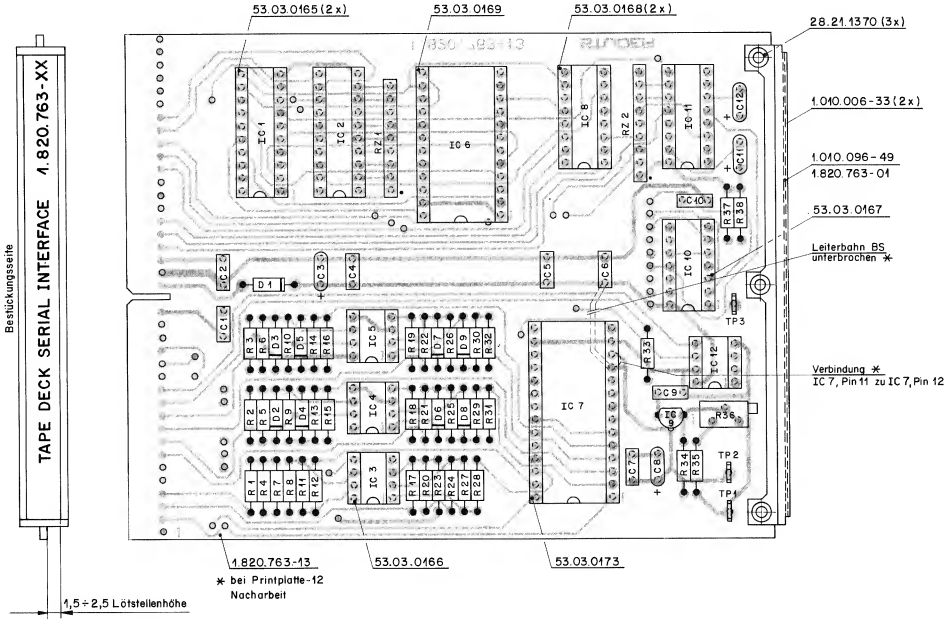

IND.	POS.NO.	PART NO.	VALUE	SPECIFICATIONS / EQUIVALENT	MANUF.
	C.....1	59.06.0683	68 nF	20%	NS,Mot
	C.....2	59.06.0683	68 nF	20%	NS,Mot
	C.....3	59.42.0470	47 uF	20%	Ph
	C.....4	59.06.0683	68 nF	20%	NS,Mot
	C.....5	59.06.0683	68 nF	20%	NS,Mot
	C.....6	59.06.0683	68 nF	20%	NS,Mot
	C.....7	59.06.0683	68 nF	20%	NS,Mot
	C.....8	59.26.9109	1.0 uF	20%	Ph
	C.....9	59.06.0683	68 nF	20%	NS,Mot
	C.....10	59.06.0683	68 nF	20%	NS,Mot
	C.....11	59.26.1479	4.7 uF	20%	Ph
	C.....12	59.26.1479	4.7 uF	20%	Ph
	D.....1	50.04.0512	1N 5818	1N 5819	Mot
	D.....2	50.04.1103	7.5 V	5%, .40W,Z,planar	ITT,Sae
	D.....3	50.04.1103	7.5 V	5%, .40W,Z,planar	ITT,Sae
	D.....4	50.04.0125	1N 4448	SI	Fc,ITT,Ph,Sae,TI
	D.....5	50.04.0125	1N 4448	SI	Fc,ITT,Ph,Sae,TI
	D.....6	50.04.1103	7.5 V	5%, .40W,Z,planar	ITT,Sae
	D.....7	50.04.1103	7.5 V	5%, .40W,Z,planar	ITT,Sae
	D.....8	50.04.0125	1N 4448	SI	Fc,ITT,Ph,Sae,TI
	D.....9	50.04.0125	1N 4448	SI	Fc,ITT,Ph,Sae,TI
	IC....1	50.17.1541	74HC 541		Mot,NS,Ph,RCA,SGS,TI,To
	IC....2	50.17.1645	74HC 645		Mot,NS,Ph,RCA,SGS,TI,To
	IC....3	50.09.0107	RC4559 NB		NEC,Ra
	IC....4	50.09.0107	RC4559 NB		NEC,Ra
	IC....5	50.09.0107	RC4559 NB		NEC,Ra
	IC....6	50.16.0114	MC68A52P	HD68A52, 568A52	AMI,Hi,Mot
	IC....7	50.19.0101	ADC 0809	M 58990 P	NS
	IC....8	50.17.1158	74HC 158		Mot,Nat,Ph,RCA,SGS,TI,To
	IC....9	50.10.0108	LM317 LZ	V-Reg.	Mot,Nat
	IC....10	50.17.1002	74HC 02		Mot,Nat,Ph,RCA,SGS,TI,To
	IC....11	50.17.1123	74HC 123		Ph,RCA,SGS,To
	IC....12	50.05.0203	SN75463P	DS 3613 N	NS,TI
	R.....1	57.11.3303	30 kOhm	2%	

IND.	POS.NO.	PART NO.	VALUE	SPECIFICATIONS / EQUIVALENT	MANUF.
	R.....2	57.11.3562	5.6 kOhm	5%	
	R.....3	57.11.3562	5.6 kOhm	5%	
	R.....4	57.11.3103	10 kOhm	2%	
	R.....5	57.11.3152	1.5 kOhm	5%	
	R.....6	57.11.3152	1.5 kOhm	5%	
	R.....7	57.11.3303	30 kOhm	2%	
	R.....8	57.11.3103	10 kOhm	2%	
	R.....9	57.11.3822	8.2 kOhm	5%	
	R.....10	57.11.3822	8.2 kOhm	5%	
	R.....11	57.11.3153	15 kOhm	2%	
	R.....12	57.11.3102	1.0 kOhm	5%	
	R.....13	57.11.3332	3.3 kOhm	5%	
	R.....14	57.11.3332	3.3 kOhm	5%	
	R.....15	57.11.3822	8.2 kOhm	5%	
	R.....16	57.11.3822	8.2 kOhm	5%	
	R.....17	57.11.3303	30 kOhm	2%	
	R.....18	57.11.3562	5.6 kOhm	5%	
	R.....19	57.11.3562	5.6 kOhm	5%	
	R.....20	57.11.3103	10 kOhm	2%	
	R.....21	57.11.3152	1.5 kOhm	5%	
	R.....22	57.11.3152	1.5 kOhm	5%	
	R.....23	57.11.3303	30 kOhm	2%	
	R.....24	57.11.3103	10 kOhm	2%	
	R.....25	57.11.3822	8.2 kOhm	5%	
	R.....26	57.11.3822	8.2 kOhm	5%	
	R.....27	57.11.3153	15 kOhm	2%	
	R.....28	57.11.3102	1.0 kOhm	5%	
	R.....29	57.11.3332	3.3 kOhm	5%	
	R.....30	57.11.3332	3.3 kOhm	5%	
	R.....31	57.11.3822	8.2 kOhm	5%	
	R.....32	57.11.3822	8.2 kOhm	5%	
	R.....33	57.11.3562	5.6 kOhm	5%	
	R.....34	57.11.3471	470 Ohm	2%	
	R.....35	57.11.3122	1.2 kOhm	2%	
	R.....36	58.05.0501	500 Ohm	Potentiometer	see note 1
	R.....37	57.11.3104	100 kOhm	5%	
	R.....38	57.11.3104	100 kOhm	5%	

IND.	POS.NO.	PART NO.	VALUE	SPECIFICATIONS / EQUIVALENT	MANUF.
	RZ....1	57.88.4332	8x3.3kOhm	10%	
	RZ....2	57.88.4332	8x3.3kOhm	10%	
	RZ....3		not used		
	TP....1	54.02.0320	2.8x 0.8	soldering test pin	
	TP....2	54.02.0320	2.8x 0.8	soldering test pin	
	TP....3	54.02.0320	2.8x 0.8	soldering test pin	

Note 1 - Potentiometer : 500 Ohm, 10%, .5W, PMG

Bourns	3296 Z - 1 - 501
Spectrol	64 Z 501 T 000
Murata	POT 3105 Z - 1 - 501
Contelec	183 XZ 501

Manufacturer: AMI=American Microsystem Inc., Fc=Fairchild,
Hi=Hitachi, Mot=Motorola, Nat=National (Matsushita),
NEC=Nippon Electric Corp., NS=National Semiconductors,
Ph=Philips (incl. Valvo), Ra=Raytheon,
RCA=Radio Corporation of America, Sae=Seescaem,
SGS=SGS/Ates, TI=Texas Instrument, To=Toshiba.

ORIG 89/09/19

EDIT ASSEMBLY 1.820.250.00
–CUE SENSOR PCB 1.820.765.00
–SHUTTLE CONTROL PCB 1.820.776.00

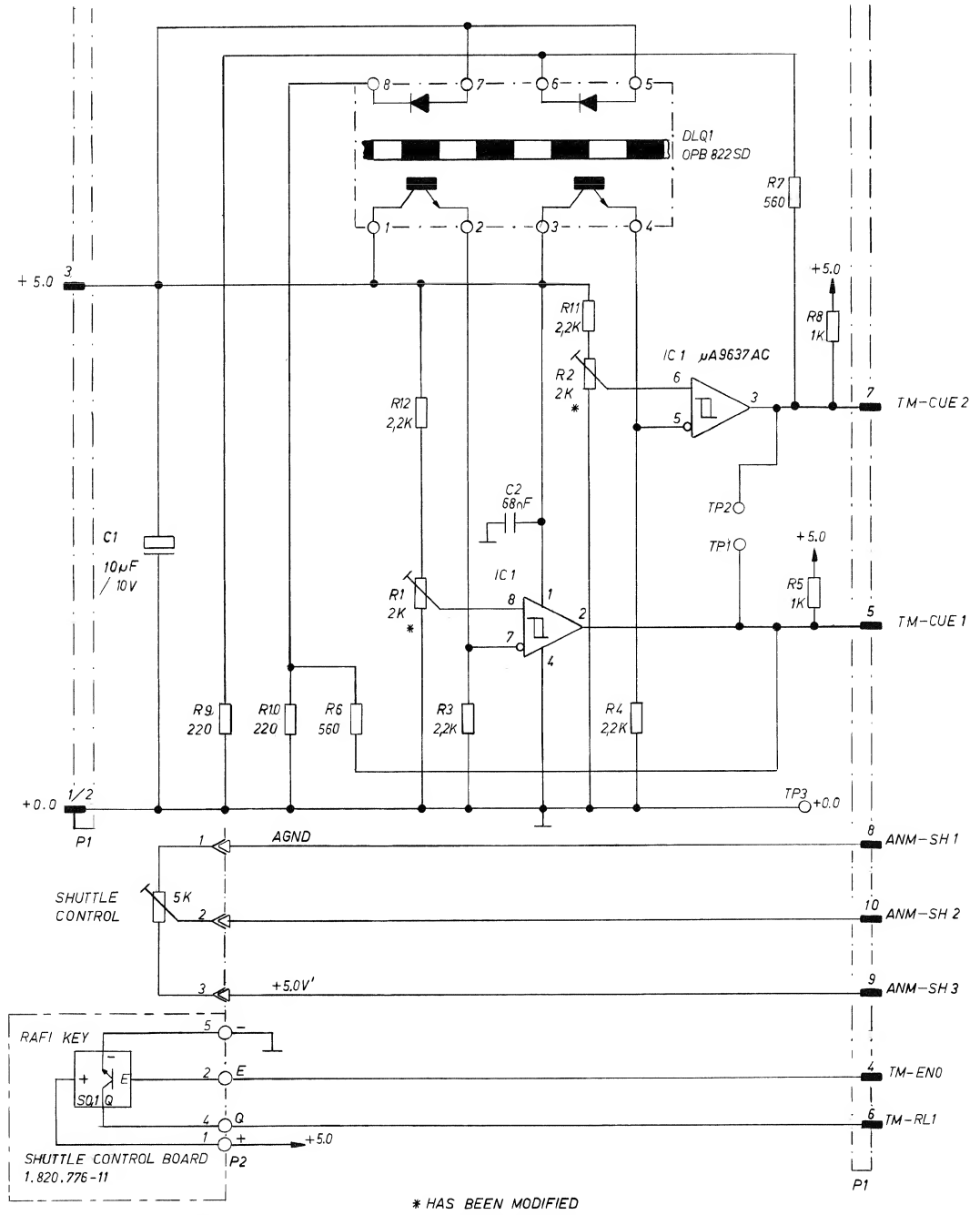

0 4.12.84 CHE	1 21.01.85 CHE	A 820 Command Section		
STUDER	Cue sensor board	SC	1. 820. 765-00	PAGE 1 OF 1

EDIT ASSEMBLY 1.820.250.00
–CUE SENSOR PCB 1.820.765.00
–SHUTTLE CONTROL PCB 1.820.776.00

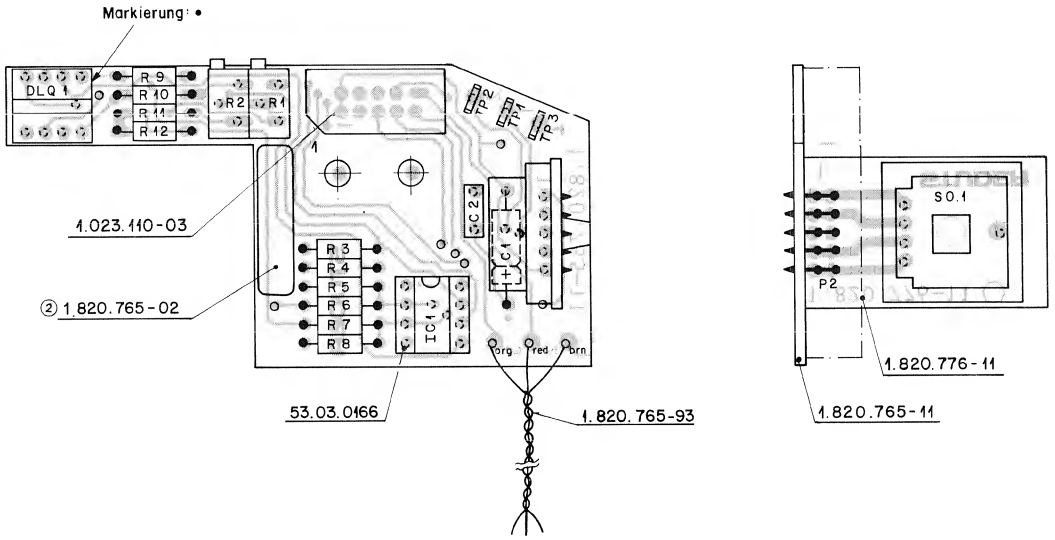

IND.	POS.NO.	PART NO.	VALUE	SPECIFICATIONS / EQUIVALENT	MANUF.
	C.....1	59.25.4100	10 uF	-20%, 10V, El	
	C.....2	59.06.0683	68 nF	-10%, 63V, PETP	
	DLQ...1	1.820.765.01		Dual Optical Switch, see note 1	St
	IC....1	50.15.0114	uA9637 ATC	uA9637 ACP	Fc,TI
	P.....1	1.023.110.03		Flat Cable 10 pole, see note 2	
	P.....2	54.01.0269	5 cont.	AMP Nr. -163.740-3	
(00)	R.....1	58.05.0501	500 Ohm	see note 3	
(01)	R.....1	58.05.0202	2 kOhm	see note 3	
(00)	R.....2	58.05.0501	500 Ohm	see note 3	
(01)	R.....2	58.05.0202	2 kOhm	see note 3	
	R.....3	57.11.3222	2.2 kOhm	1%	
	R.....4	57.11.3222	2.2 kOhm	1%	
	R.....5	57.11.3102	1 kOhm	1%	
	R.....6	57.11.3561	560 Ohm	1%	
	R.....7	57.11.3561	560 Ohm	1%	
	R.....8	57.11.3102	1 kOhm	1%	
	R.....9	57.11.3221	220 Ohm	1%	
	R....10	57.11.3221	220 Ohm	1%	
(00)	R....11	57.11.3222	2.2 kOhm	1%	
(02)	R....11	57.11.3102	1 kOhm	1%	
(00)	R....12	57.11.3222	2.2 kOhm	1%	
(02)	R....12	57.11.3102	1 kOhm	1%	
	S.....1	55.03.0261	TTL-switch	1 * OC, Rafi Nr. 3.13001.110	
	TP....1	54.02.0320		Test Point	
	TP....2	54.02.0320		Test Point	
	TP....3	54.02.0320		Test Point	

ORIG 84/01/04

S T U D E R (02) 89/05/25 CHE CUE SENSOR BOARD PL 1.820.765.00 PAGE 1

IND.	POS.NO.	PART NO.	VALUE	SPECIFICATIONS / EQUIVALENT	MANUF.
	P.....1	54.01.0223		CIS MALE CONNECTOR 7 PIN	
	S.....1	55.03.0261	1 * OC TTL	RAFI PUSHBUTTON	

S T U D E R (00) 84/01/04 CHE SHUTTLE CONTROL BOARD PL 1.820.776.00 PAGE 1

IND.	POS.NO.	PART NO.	VALUE	SPECIFICATIONS / EQUIVALENT	MANUF.

(01) 85.01.21 Extension of adjust margin.

(02) 89.05.24 Duty cycle adjust margin extended.

Note 1 - Optical switch, assembled by Studer, consist of
OPB 822 SD (Optron).

Note 2 - Flat cable: Studer Nr. 64.03.0213

PCB Transition Header: Studer Nr. 54.14.5024
Yamaichi Nr. FGP-10-02
Burndy Nr. BPDOB 10 ROOG5

Socket Type: Studer Nr. 54.14.5020
Yamaichi Nr. FAS-10-17
Burndy Nr. FRS-10 BD-4P

Note 3 - Potentiometer 2 kOhm, 10%, 0.5W
Bourns Nr. 3296 Z-1-202
Spectrol Nr. 64 Z 202 T 000
Contelec Nr. 183 XZ 202
Murata Nr. POT 3105 Z-1-202

El=Electrolytic, PETP=Polyester

MANUFACTURER: Fc=Fairchild, St=Studer, TI=Texas Instruments

ORIG 84/12/04 (01) 85/01/21 (02) 89/05/25

S T U D E R (02) 89/05/25 CHE CUE SENSOR BOARD PL 1.820.765.00 PAGE 2

TAPE DECK INDICATOR BOARD 1.820.766.00

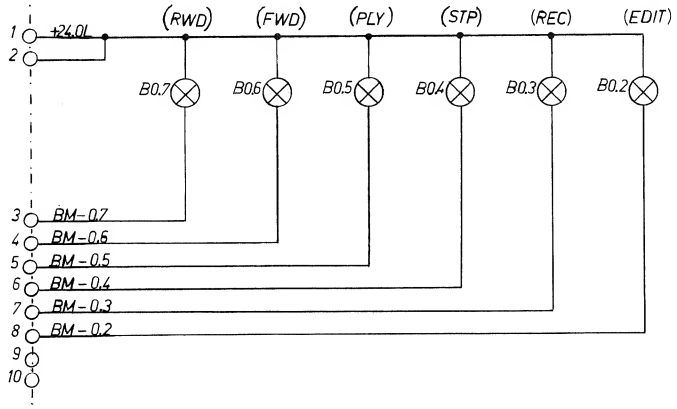

B 0.2 - B 0.7: 24V / 0.04A T5.5
XB 0.2 - XB 0.7: LAMP HOLDER

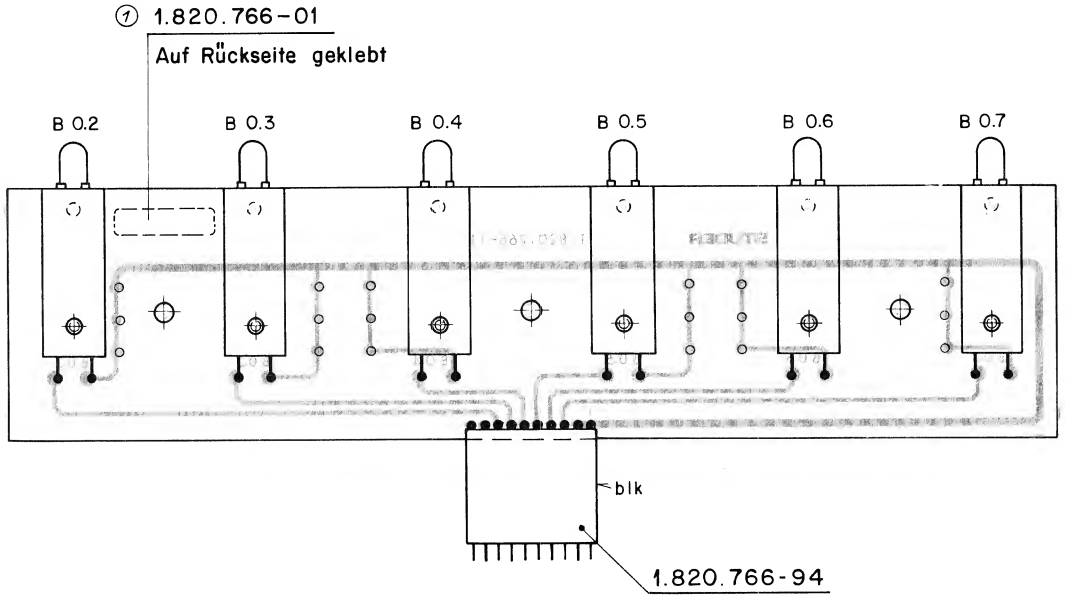

23.11.84 R.SUTER		A 820 Command Section	
STUDER	Tape Deck Indicator PCB	SC 1.820.766.00	PAGE 1 OF 1

IND.	POS.NO.	PART NO.	VALUE	SPECIFICATIONS / EQUIVALENT	MANUF.
	B...0.2	51.02.0145	24 V	see note 1	
	B...0.3	51.02.0145	24 V	see note 1	
	B...0.4	51.02.0145	24 V	see note 1	
	B...0.5	51.02.0145	24 V	see note 1	
	B...0.6	51.02.0145	24 V	see note 1	
	B...0.7	51.02.0145	24 V	see note 1	
	XB..0.2	1.080.265.00		lamp holder	St
	XB..0.3	1.080.265.00		lamp holder	St
	XB..0.4	1.080.265.00		lamp holder	St
	XB..0.5	1.080.265.00		lamp holder	St
	XB..0.6	1.080.265.00		lamp holder	St
	XB..0.7	1.080.265.00		lamp holder	St

Note 1 - Indicator lamp: Tannuelicht nr. 5530 24 V, 40 mA
Oehine nr. OL - SS2440

MANUFACTURER: St=Studer

ORIG 84/11/23

S T U D E R (OO) 84/11/23 CHE TAPE DECK INDICATOR BOARD FL 1.820.766.00 PAGE

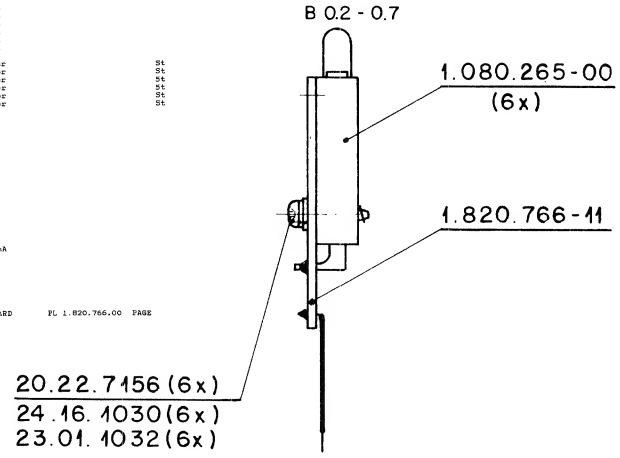

TAPE DECK DISPLAY DRIVER 1.820.768.84

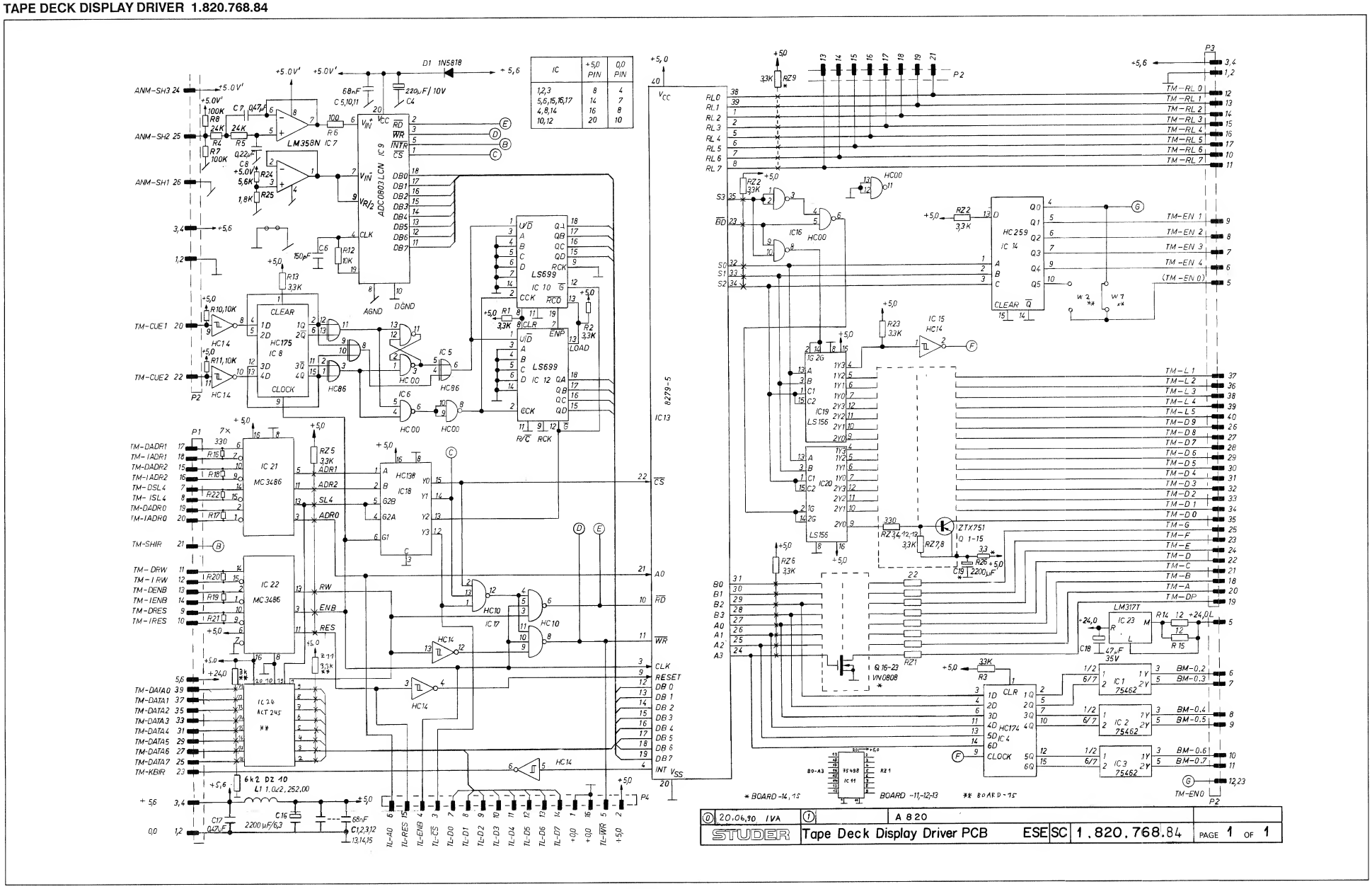

TAPE DECK DISPLAY DRIVER 1.820.768.84

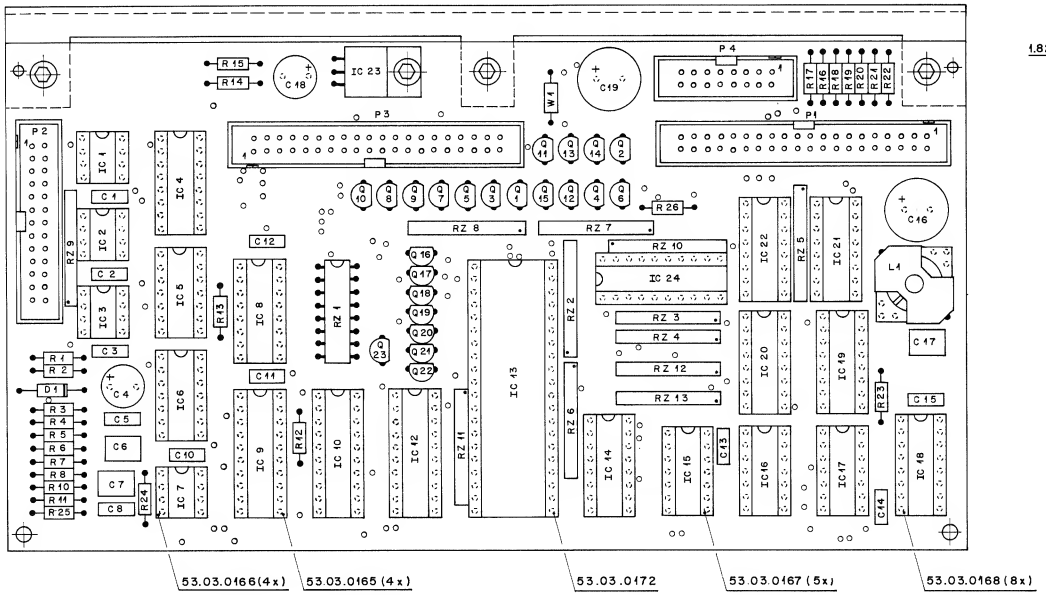

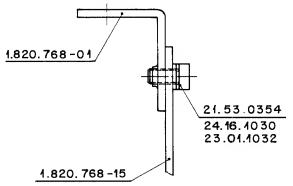

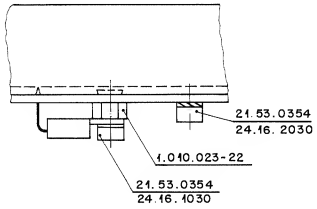

IND.	POS.NO.	PART NO.	VALUE	SPECIFICATIONS / EQUIVALENT	MANUF.
	C....1	59.06.0683	68 nF	-10%, 63V, PETP	
	C....2	59.06.0683	68 nF	-10%, 63V, PETP	
	C....3	59.06.0683	68 nF	-10%, 63V, PETP	
	C....4	59.22.9221	220 uF	-20%, 10V, El	
	C....5	59.06.0683	68 nF	-10%, 63V, PETP	
	C....6	59.05.2151	150 pF	2.5%, PP	
	C....7	59.06.0474	470 nF	-20%, 63V, PETP	
	C....8	59.06.0224	220 nF	-20%, 63V, PETP	
	C....10	59.06.0683	68 nF	-10%, 63V, PETP	
	C....11	59.06.0683	68 nF	-10%, 63V, PETP	
	C....12	59.06.0683	68 nF	-10%, 63V, PETP	
	C....13	59.06.0683	68 nF	-10%, 63V, PETP	
	C....14	59.06.0683	68 nF	-10%, 63V, PETP	
	C....15	59.06.0683	68 nF	-10%, 63V, PETP	
	C....16	59.22.2222	2200 uF	-20%, 6.3V, El	
	C....17	59.06.0474	470 nF	-10%, 63V, PETP	
	C....18	59.22.6470	47 uF	-10%, 40V, El	
	C....19	59.22.2222	2200 uF	-20%, 6.3V, El	
	D.....1	50.04.0512	1N 5818	1N 5819	Mot
	IC....1	50.05.0227	SN 75462P	SN 75462 JG, SN 75472P	TI
	IC....2	50.05.0227	SN 75462P	SN 75462 JG, SN 75472P	TI
	IC....3	50.05.0227	SN 75462P	SN 75462 JG, SN 75472P	TI
	IC....4	50.17.1174	74 HC 174		Mot,NS,Ph,RCA,SGS,TI,To
	IC....5	50.17.1086	74 HC 86		Mot,NS,Ph,RCA,TI,To
	IC....6	50.17.1000	74 HC 00		Mot,NS,Ph,RCA,TI,To
	IC....7	50.05.0286	LM 358 N	LM 358 P	Mot,NS/TI
	IC....8	50.17.1175	74 HC 175		Mot,NS,Ph,SGS,TI,To
	IC....9	50.07.0029	ADC0809LCN		In,NS
	IC....10	50.06.0699	74 LS 699		Mot,NS,TI
	IC....11		not used		
	IC....12	50.06.0699	74 LS 699		Mot,NS/TI
	IC....13	50.16.0111	IF 8279-5	M 5 L 8279 P-5	It,Mi
	IC....14	50.17.1259	74 HC 259		Mot,NS,Ph,RCA,SGS,TI,To
	IC....15	50.17.1014	74 HC 14		Mot,NS,Ph,RCA,TI,To
	IC....16	50.17.1000	74 HC 00		Mot,NS,Ph,RCA,SGS,TI,To

IND.	POS.NO.	PART NO.	VALUE	SPECIFICATIONS / EQUIVALENT	MANUF.
	IC....17	50.17.1010	74 HC 10		Mot,NS,Ph,RCA,TI,To
	IC....18	50.17.1138	74 HC 138		Mot,NS,Ph,RCA,SGS,TI,To
	IC....19	50.06.0156	74 LS 156		Fe,NS/TI
	IC....20	50.06.0156	74 LS 156		Fe,NS/TI
	IC....21	50.15.0104	MC 3486 P	DS 3486 N	Mot,NS
	IC....22	50.15.0104	MC 3486 P	DS 3486 N	Mot,NS
	IC....23	50.10.0104	LM 317 T	...KC, ...SP	Mot,NS,SGS,Tho/TI
	IC....24	50.17.7245		.. 74 ACT 245	RCA,FA
	L.....1	1.022.252.00	0.32 mH	Filter Coil	St
	P.....1	54.14.2004	Connector	40 contacts, flat cable	
	P.....2	54.14.2003	Connector	26 contacts, flat cable	
	P.....3	54.14.2004	Connector	40 contacts, flat cable	
	P.....4	54.14.2002	Connector	16 contacts, flat cable	
	Q.....1	50.03.0352	ZTX 751 S		Fe
	Q.....2	50.03.0352	ZTX 751 S		Fe
	Q.....3	50.03.0352	ZTX 751 S		Fe
	Q.....4	50.03.0352	ZTX 751 S		Fe
	Q.....5	50.03.0352	ZTX 751 S		Fe
	Q.....6	50.03.0352	ZTX 751 S		Fe
	Q.....7	50.03.0352	ZTX 751 S		Fe
	Q.....8	50.03.0352	ZTX 751 S		Fe
	Q.....9	50.03.0352	ZTX 751 S		Fe
	Q....10	50.03.0352	ZTX 751 S		Fe
	Q....11	50.03.0352	ZTX 751 S		Fe
	Q....12	50.03.0352	ZTX 751 S		Fe
	Q....13	50.03.0352	ZTX 751 S		Fe
	Q....14	50.03.0352	ZTX 751 S		Fe
	Q....15	50.03.0352	ZTX 751 S		Fe
	Q....16	50.03.1505	VN 0808M		Fe,Six
	Q....17	50.03.1505	VN 0808M		Fe,Six
	Q....18	50.03.1505	VN 0808M		Fe,Six
	Q....19	50.03.1505	VN 0808M		Fe,Six
	Q....20	50.03.1505	VN 0808M		Fe,Six
	Q....21	50.03.1505	VN 0808M		Fe,Six

IND.	POS.NO.	PART NO.	VALUE	SPECIFICATIONS / EQUIVALENT	MANUF.
	Q....22	50.03.1505	VN 0808M		Fe,Six
	Q....23	50.03.1505	VN 0808M		Fe,Six
	R.....1	57.11.3332	3.3 kOhm	2%	
	R.....2	57.11.3332	3.3 kOhm	2%	
	R.....3	57.11.3332	3.3 kOhm	2%	
	R.....4	57.11.3243	24 kOhm	1%	
	R.....5	57.11.3243	24 kOhm	1%	
	R.....6	57.11.3101	100 Ohm	2%	
	R.....7	57.11.3104	100 kOhm	2%	
	R.....8	57.11.3104	100 kOhm	2%	
	R....10	57.11.3103	10 kOhm	2%	
	R....11	57.11.3103	10 kOhm	2%	
	R....12	57.11.3103	10 kOhm	2%	
	R....13	57.11.3332	3.3 kOhm	2%	
	R....14	57.11.3120	12 Ohm	2%	
	R....15	57.11.3120	12 Ohm	2%	
	R....16	57.11.3331	330 Ohm	2%	
	R....17	57.11.3331	330 Ohm	2%	
	R....18	57.11.3331	330 Ohm	2%	
	R....19	57.11.3331	330 Ohm	2%	
	R....20	57.11.3331	330 Ohm	2%	
	R....21	57.11.3331	330 Ohm	2%	
	R....22	57.11.3331	330 Ohm	2%	
	R....23	57.11.3332	3.3 kOhm	2%	
	R....24	57.11.3562	5.6 kOhm	1%	
	R....25	57.11.3182	1.8 kOhm	1%	
	R....26	57.11.3339	3.3 Ohm	2%	
	RZ....1	57.88.3220	Network,	8 * 22 Ohm, 2%, DIL 16	
	RZ....2	57.88.4332	Network,	8 * 3.3 kOhm, 5%, SIP 9	
	RZ....3	57.88.2331	Network,	4 * 330 Ohm, 2%, SIP 8	
	RZ....4	57.88.2331	Network,	4 * 330 Ohm, 2%, SIP 8	
	RZ....5	57.88.4332	Network,	8 * 3.3 kOhm, 5%, SIP 9	
	RZ....6	57.88.4332	Network,	8 * 3.3 kOhm, 5%, SIP 9	
	RZ....7	57.88.4332	Network,	8 * 3.3 kOhm, 5%, SIP 9	
	RZ....8	57.88.4332	Network,	8 * 3.3 kOhm, 5%, SIP 9	

IND.	POS.NO.	PART NO.	VALUE	SPECIFICATIONS / EQUIVALENT	MANUF.
	RZ....9	57.88.4332	Network,	8 * 3.3 kOhm, 5%, SIP 9	
	RZ....10	57.80.4007	Network,	8 * 3.0/6.2 kOhm 2%, SIP10	
	RZ....11	57.88.4332	Network,	8 * 3.3 kOhm, 2%, SIP 9	
	RZ....12	57.88.2331	Network,	4 * 330 Ohm, 2%, SIP 8	
	RZ....13	57.88.2331	Network,	4 * 330 Ohm, 2%, SIP 8	
	W.....1	57.11.3000		0 Ohm Resistor or insulated wire bridge	
	W.....2	57.00.0000	not used		

El=Electrolytic; PETP=Polyester, PP=Polypropylene

MANUFACTURERS: Fa=Fairchild, Fa=Ferranti; Is=Intersil, It=Intel,
Mi=Mitsubishi; Mot=Motorola,
NS=National Semiconductors; Ph=Philips,
RCA=RCA Corporation; SGS=SGS/Ates, Six=Siliconix,
St=Studer, Tho=Thomson; TI=Texas Instruments,
To=Toshiba.

ORIS 90/06/20

TAPE DECK PUSHBUTTON BOARD 1.820.769.00

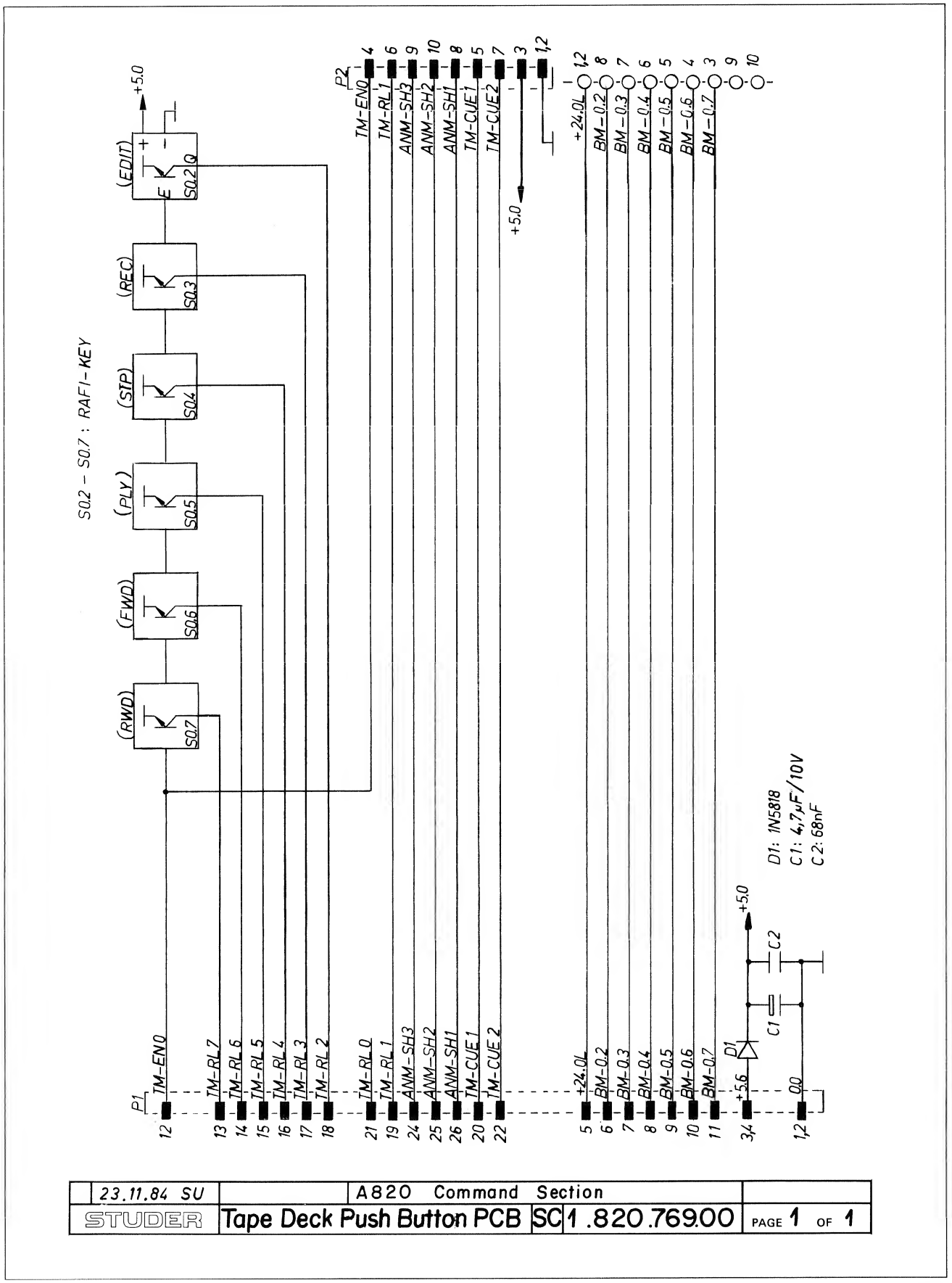

23.11.84 SU	A820 Command Section		
STUDER	Tape Deck Push Button PCB	SC 1.820.769.00	PAGE 1 OF 1

TAPE DECK PUSHBUTTON BOARD 1.820.769.00

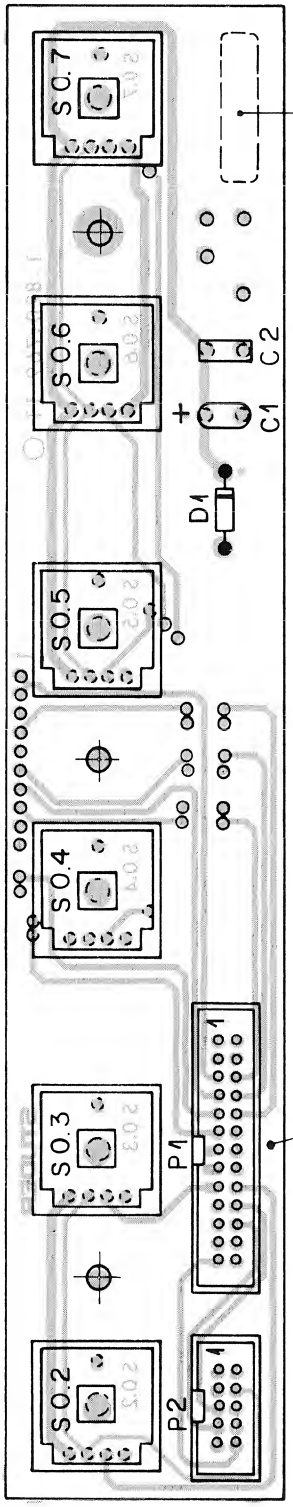

IND.	POS.NO.	PART NO.	VALUE	SPECIFICATIONS / EQUIVALENT	MANUF.
	C.....1	59.26.1479	4.7 uF	-20%, 10V , Sal	Ph
	C.....2	59.06.0683	68 nF	-10%, 63V , PETP	
	D.....1	50.04.0512	1 N 5818	1 N 5819	Mot
	P.....1	54.14.2003		see note 1	
	P.....2	54.14.2001		see note 2	
	S...0.2	55.03.0261		Pushbutton switch, RAFI nr. 3.13001.110	
	S...0.3	55.03.0261		Pushbutton switch, RAFI nr. 3.13001.110	
	S...0.4	55.03.0261		Pushbutton switch, RAFI nr. 3.13001.110	
	S...0.5	55.03.0261		Pushbutton switch, RAFI nr. 3.13001.110	
	S...0.6	55.03.0261		Pushbutton switch, RAFI nr. 3.13001.110	
	S...0.7	55.03.0261		Pushbutton switch, RAFI nr. 3.13001.110	

Note 1 - connector 26 contacts: Yamaichi nr. FAP-26-08#4
Burndy nr. BPH 9 B 26 B00 GS

Note 2 - connector 10 contacts: Yamaichi nr. FAP-10-08#4
Burndy nr. BPH 7 B 10 B00 GS

Sal=Solid Aluminium, PETP=Metallized Polyesterfilm

MANUFACTURER: Mot=Motorola, Ph=Philips

ORIG 84/11/23

S T U D E R (00) 84/11/23 CHE TAPE DECK PUSHBUTTON BOARD PL 1.820.769.00 PAGE 1

MOVE SENSOR BOARD 1.820.770.82

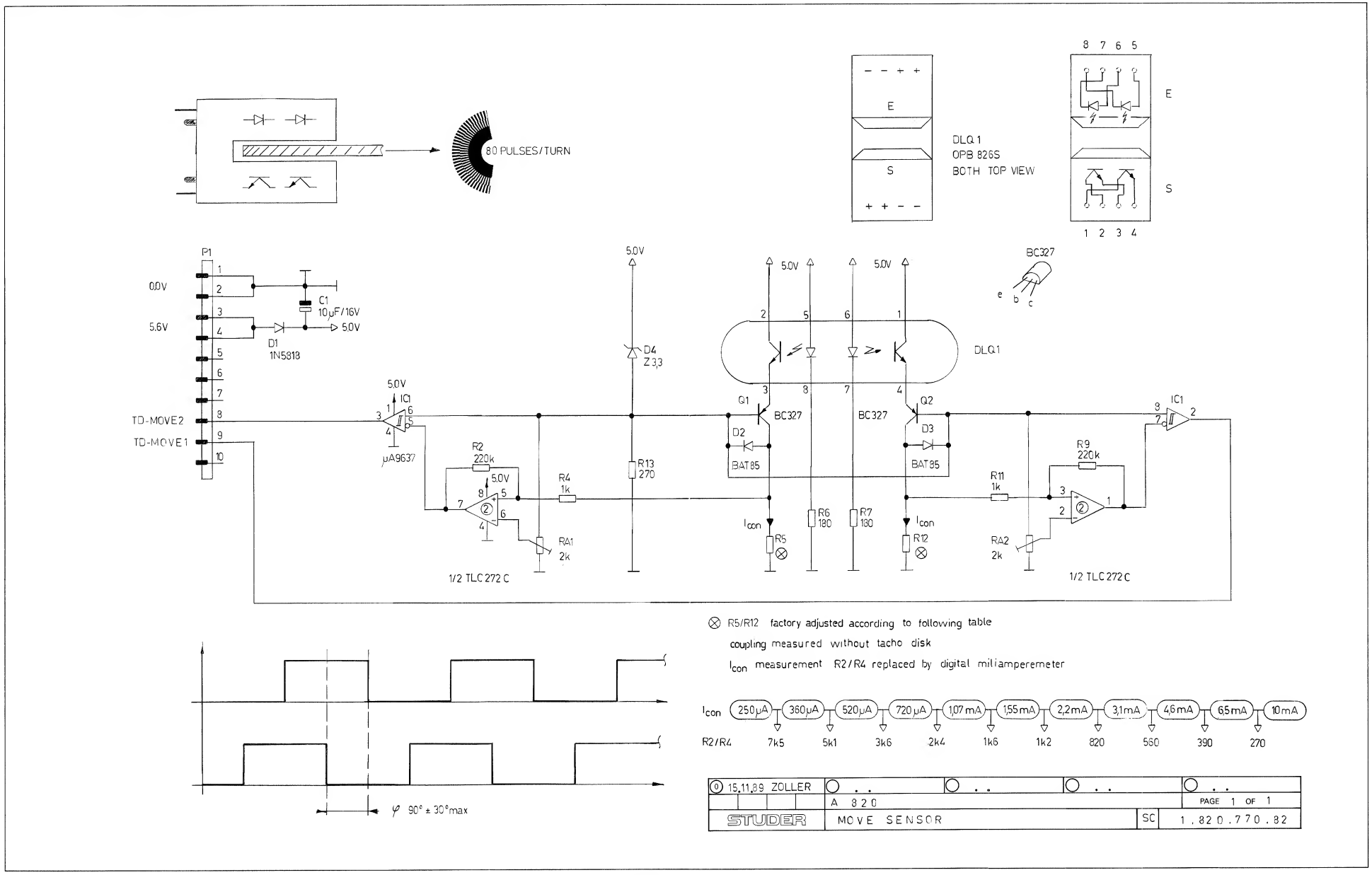

MOVE SENSOR BOARD 1.820.770.82

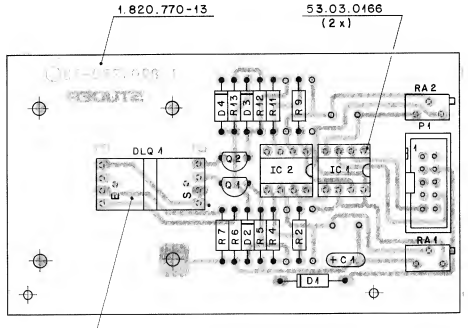

DLQ1 satt aufliegend auf Bestückungsseite montiert.

43.01.0108 und Schild 1.820.770-01 aufgeklebt nach Fabrikationsmuster.

IND.	POS.NO.	PART NO.	VALUE	SPECIFICATIONS / EQUIVALENT	MANUF.
	C.....1	59.26.2100	10 uF	20%, 16V, Sal	
	C.....2		not used		
	C.....3		not used		
	D.....1	50.04.0512	1N 5818	1N 5918	Mot
	D.....2	50.04.0127	BAT 42	BAT 85, BAS 40-02,	Ph,Sie,Tho
	D.....3	50.04.0127	BAT 42	BAT 85, BAS 40-02,	Ph,Sie,Tho
	D.....4	50.04.1107	3.3V Z	BZX 55-C3V3	ITT,Mot,Ph,TI,Tho
	DLQ...1	50.99.0166	OPB 826		Op
	IC....1	50.15.0114	uA9637ACP	9637 AIC	Fc,TI
(00)	IC....2	50.05.0286	LM 358 N	LM 358 P	NS,Mot,SGS,Ti
(01)	IC....2	50.09.0122	TLC 272 C	TS 272 CN	SGS,Ti
	P.....1	54.14.2001	10 cont.	see note 1	
	Q.....1	50.03.0351	BC 327-25		ITT,Ph,Sie
	Q.....2	50.03.0351	BC 327-25		ITT,Ph,Sie
	R.....1		not used		
	R.....2	57.11.3224	220 kOhm	1%	
	R.....3		not used		
	R.....4	57.11.3102	1 kOhm	1%	
	R.....5		factory	adjusted	
	R.....6	57.11.3181	180 Ohm	1%	
	R.....7	57.11.3181	180 Ohm	1%	
	R.....8		not used		
	R.....9	57.11.3224	220 kOhm	1%	
	R....10		not used		
	R....11	57.11.3102	1 kOhm	1%	
	R....12		factory	adjusted	
	R....13	57.11.3271	270 Ohm	1%	
	RA....1	58.05.0202	2 kOhm	10% multi turn	
	RA....2	58.05.0202	2 kOhm	10% multi turn	

S T U D E R (01) 90/01/11 PZ MOVE SENSOR PL 1.820.770.82 PAGE 1

IND.	POS.NO.	PART NO.	VALUE	SPECIFICATIONS / EQUIVALENT	MANUF.

(01) 11.01.90 Printout error

Note 1 - Connector 10 contacts:
Yamaichi nr. FAF-10-08-405S
Burndy nr. BPH 9 B10 B00 GS
3M nr. 7610-6002 VZ

El=Electrolytic, Sal=Solid aluminium

MANUFACTURER: Fc=Fairchild, ITT=Intermetall, Mot=Motorola, NS=National Semiconductor, Op=Optron, Ph=Philips, SGS=SGS/Ates, Sie=Siemens, TI=Telefunken, Tho=Thomson, TI=Texas Instrument.

ORIG 89/11/15 (01) 90/01/11

S T U D E R (01) 90/01/11 PZ MOVE SENSOR PL 1.820.770.82 PAGE 2

MOTOR TACHO BOARD 1.820.771.83

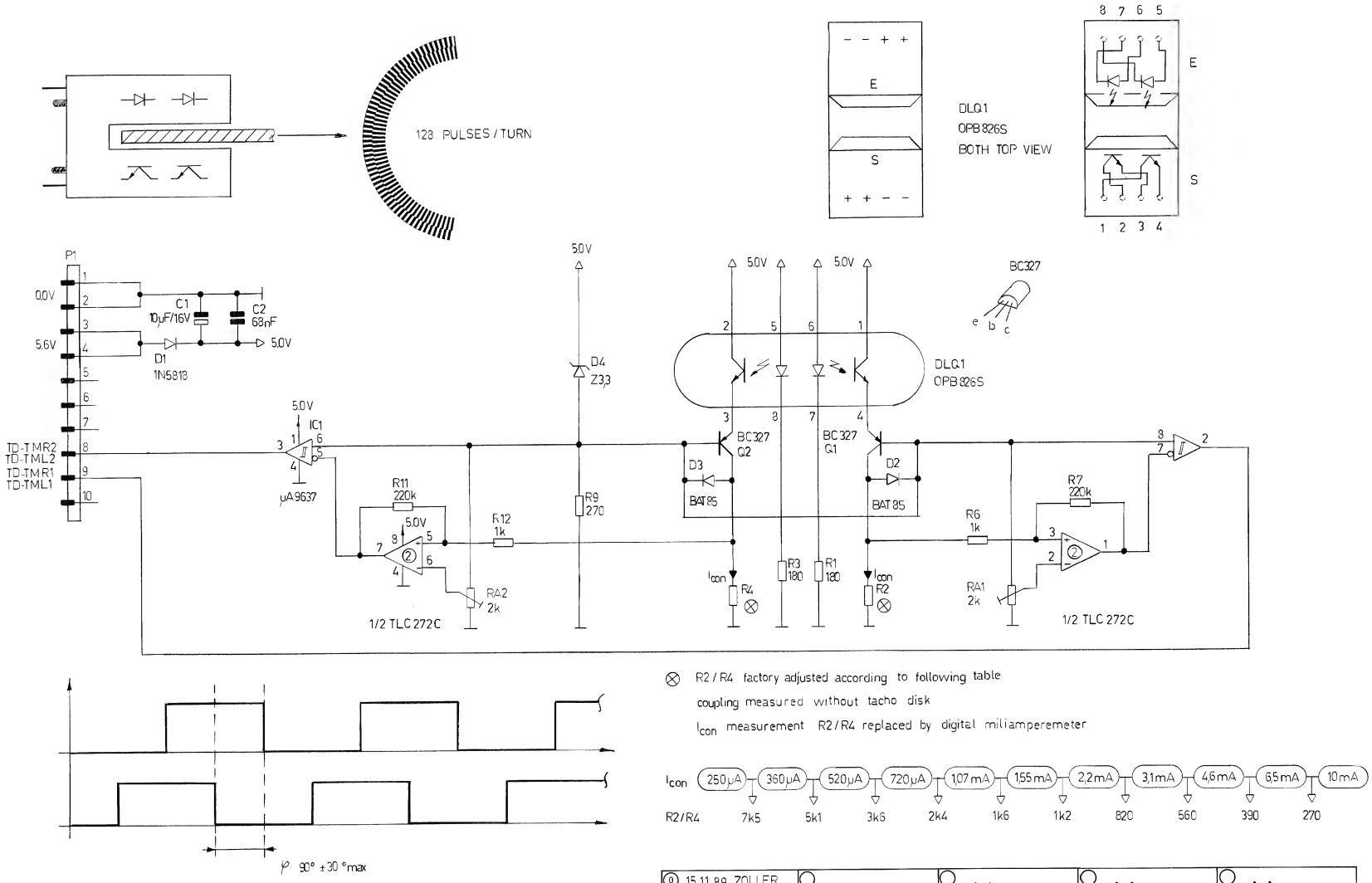

MOTOR TACHO BOARD 1.820.771.83

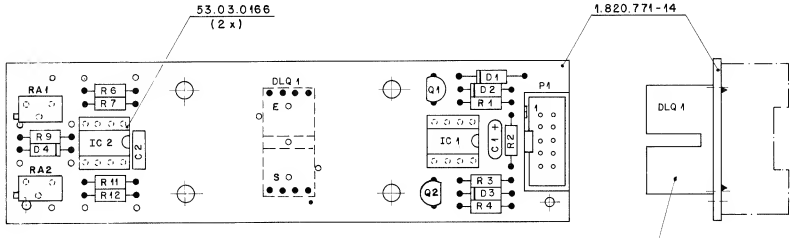

IND.	POS.NO.	PART NO.	VALUE	SPECIFICATIONS / EQUIVALENT	MANUF.
	C....1	59.26.2100	10 uF	20%, 16V, Sal	
	C....2	59.06.0683	68 nF	10%, 63V, PETP	
	C....3		not used		
	C....4		not used		
	D....1	50.04.0512	1N 5818	1N 5918	Mot
	D....2	50.04.0127	BAT 42	BAT 85, BAS 40-02,	Ph,Sie,Tho
	D....3	50.04.0127	BAT 42	BAT 85, BAS 40-02,	Ph,Sie,Tho
	D....4	50.04.1107	3.3V Z	BZX 55-C3V3	ITT,Mot,Ph,TI,Tho
	DLQ...1	50.99.0166	GPB 826		Op
	IC....1	50.15.0114	uA9637ACP	9637 ATC	Fe,TI
(00)	IC....2	50.05.0286	LM 358 N	LM 358 P	NS,Mot,SGS,Ti
(01)	IC....2	50.09.0122	TLC 272 C	TS 272 CN	SGS,Ti
	P....1	54.14.2001	10 cont.	see note 1	
	Q....1	50.03.0351	BC 327-25		ITT,Ph,Sie
	Q....2	50.03.0351	BC 327-25		ITT,Ph,Sie
	R....1	57.11.3181	180 Ohm	1%	
	R....2		factory	adjusted	
	R....3	57.11.3181	180 Ohm	1%	
	R....4		factory	adjusted	
	R....5		not used	1%	
	R....6	57.11.3102	1 kOhm	1%	
	R....7	57.11.3224	220 kOhm	1%	
	R....8		not used		
	R....9	57.11.3271	270 Ohm	1%	
	R....10		not used		
	R....11	57.11.3224	220 kOhm	1%	
	R....12	57.11.3102	1 kOhm	1%	
	R....13		not used		
	RA....1	58.05.0202	2 kOhm	10%, multi turn	
	RA....2	58.05.0202	2 kOhm	10%, multi turn	

S T U D E R (01) 90/01/11 PZ MOTOR TACHO PL 1.820.771.83 PAGE 1

IND.	POS.NO.	PART NO.	VALUE	SPECIFICATIONS / EQUIVALENT	MANUF.

(01) 11.01.90 Printout error

Note 1 - Connector 10 contacts:
Yamaichi nr. FAP-10-08-4055
Burndy nr. EPH 9 B10 B00 G5
3M nr. 7610-6002 VZ

El=Electrolytic, Sal=Solid Aluminium

MANUFACTURER: Fe=Fairchild, ITT=Intermetall, Mot=Motorola, NS=National
Semiconductor, Op=Optron, Ph=Philips, SGS=SGS/Ates,
Sie=Siemens, Tf=Telefunken, Tho=Thomson, TI=Texas Instrument.

ORIG 89/11/15 (01) 90/01/11

S T U D E R (01) 90/01/11 PZ MOTOR TACHO PL 1.820.771.83 PAGE 2

TAPE TENSION SENSOR BOARD 1.820.772.81

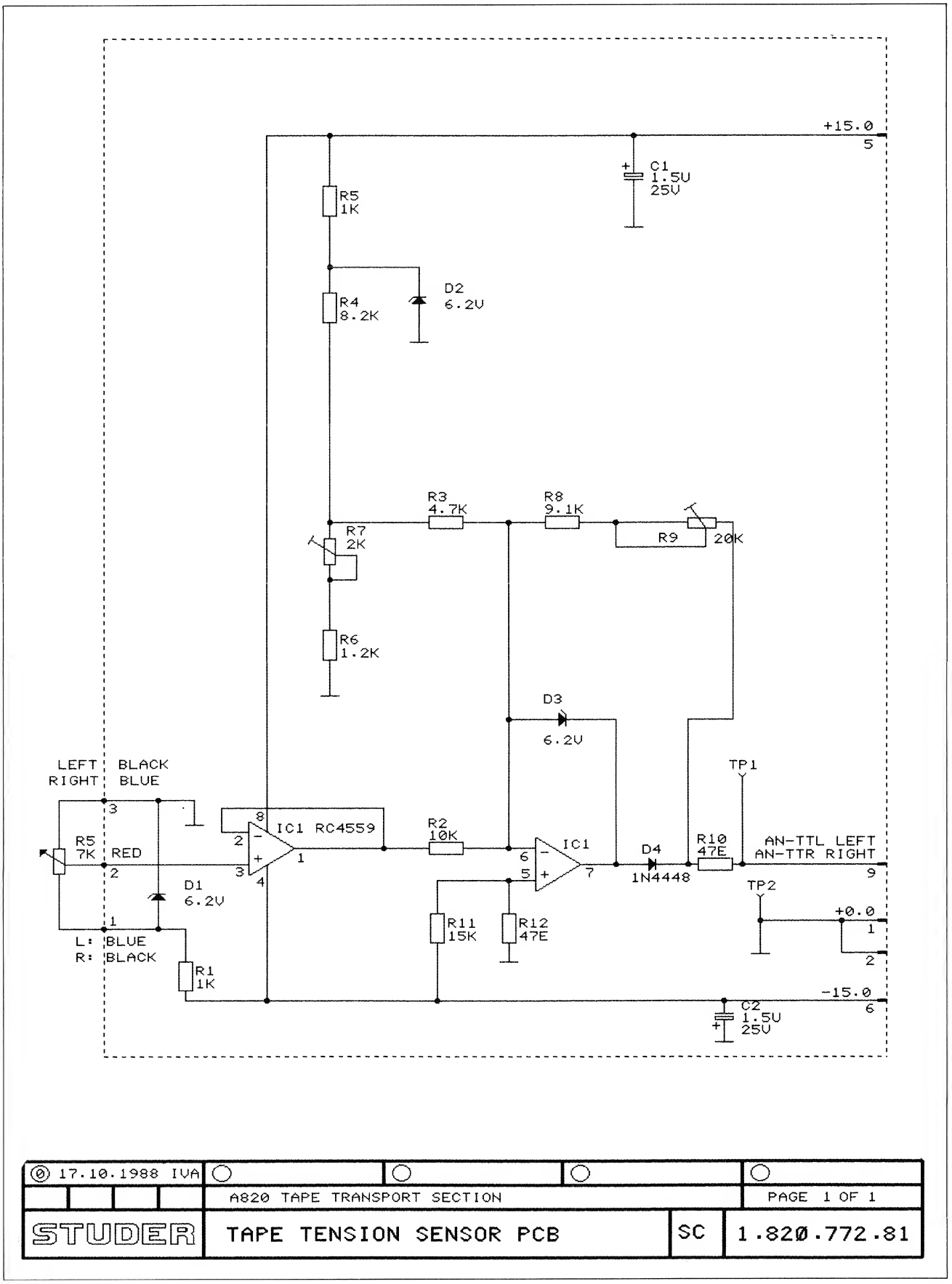

© 17.10.1988 IVA			
	A820 TAPE TRANSPORT SECTION		PAGE 1 OF 1
STUDER	TAPE TENSION SENSOR PCB	SC	1.820.772.81

TAPE TENSION SENSOR BOARD 1.820.772.81

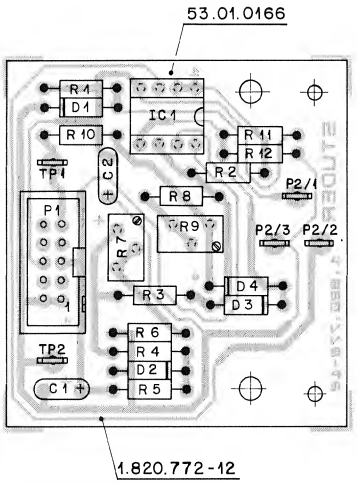

IND.	POS.NO.	PART NO.	VALUE	SPECIFICATIONS / EQUIVALENT	MANUF.
	C.....1	59.26.5159	1.5 uF	25V, Sal	Ph
	C.....2	59.26.5159	1.5 uF	25V, Sal	Ph
	D.....1	50.04.1118	6.2 V Z	BZX 55 C6V2	ITT,Mot,Ph,Tf,SGS,Tho
	D.....2	50.04.1102	6.8 V Z	BZX 55 C6V8	ITT,Mot,Ph,Tf,SGS,Tho
	D.....3	50.04.1118	6.2 V Z	BZX 55 C6V2	ITT,Mot,Ph,Tf,SGS,Tho
	D.....4	50.04.0125	1 N 4448		Fc,ITT,Ph,SES,Tf
	IC....1	50.09.0107	RC 4559 NB	uPC 4559	NEC,Ra
	P.....1	54.14.2001	10 cont.	see note 1	
	P...2/1	54.02.0320			
	P...2/2	54.02.0320			
	P...2/3	54.02.0320			
	R.....1	57.11.4102	1 kOhm		
	R.....2	57.11.4103	10 kOhm		
	R.....3	57.11.4472	4.7 kOhm		
	R.....4	57.11.4822	8.2 kOhm		
	R.....5	57.11.4102	1 kOhm		
	R.....6	57.11.4122	1.2 kOhm		
	R.....7	58.05.1202	2 kOhm	see note 2	
	R.....8	57.11.3912	9.1 kOhm		
	R.....9	58.05.1203	20 kOhm	see note 3	
	R....10	57.11.4470	47 Ohm		
	R....11	57.11.3153	15 kOhm		
	R....12	57.11.3470	47 Ohm		
	TP....1	54.02.0320	Testpoint		
	TP....2	54.02.0320	Testpoint		

IND.	POS.NO.	PART NO.	VALUE	SPECIFICATIONS / EQUIVALENT	MANUF.
Note 1 - Connector					
		Burndy		BPH 7 B 10 B00 GS	
		Yamaichi		FAP-10-08//4	
Note 2 - 2 kOhm Potentiometer, linear					
		Allan Bradley		E 2B 202	
		Bourns		386 F-1-202	
		Spectrol		63 M 202 T010	
Note 3 - 20 kOhm Potentiometer, linear					
		Allan Bradley		E 2B 203	
		Bourns		386 F-1-203	
		Spectrol		63 M 203 T010	

Sal = Solid Aluminium.

MANUFACTURER: Fc=Fairchild, ITT=Intermetall, Mot=Motorola, NEC= Nippon Electric Corp., Ph=Philips, Ra=Raytheon, SGS=SGS/Ates, Ses=Secosem, Tho=Thomson, Tf=Telefunken.

ORIG 88/11/29

TAPE LIFTER CONTROL BOARD 1.820.773.82

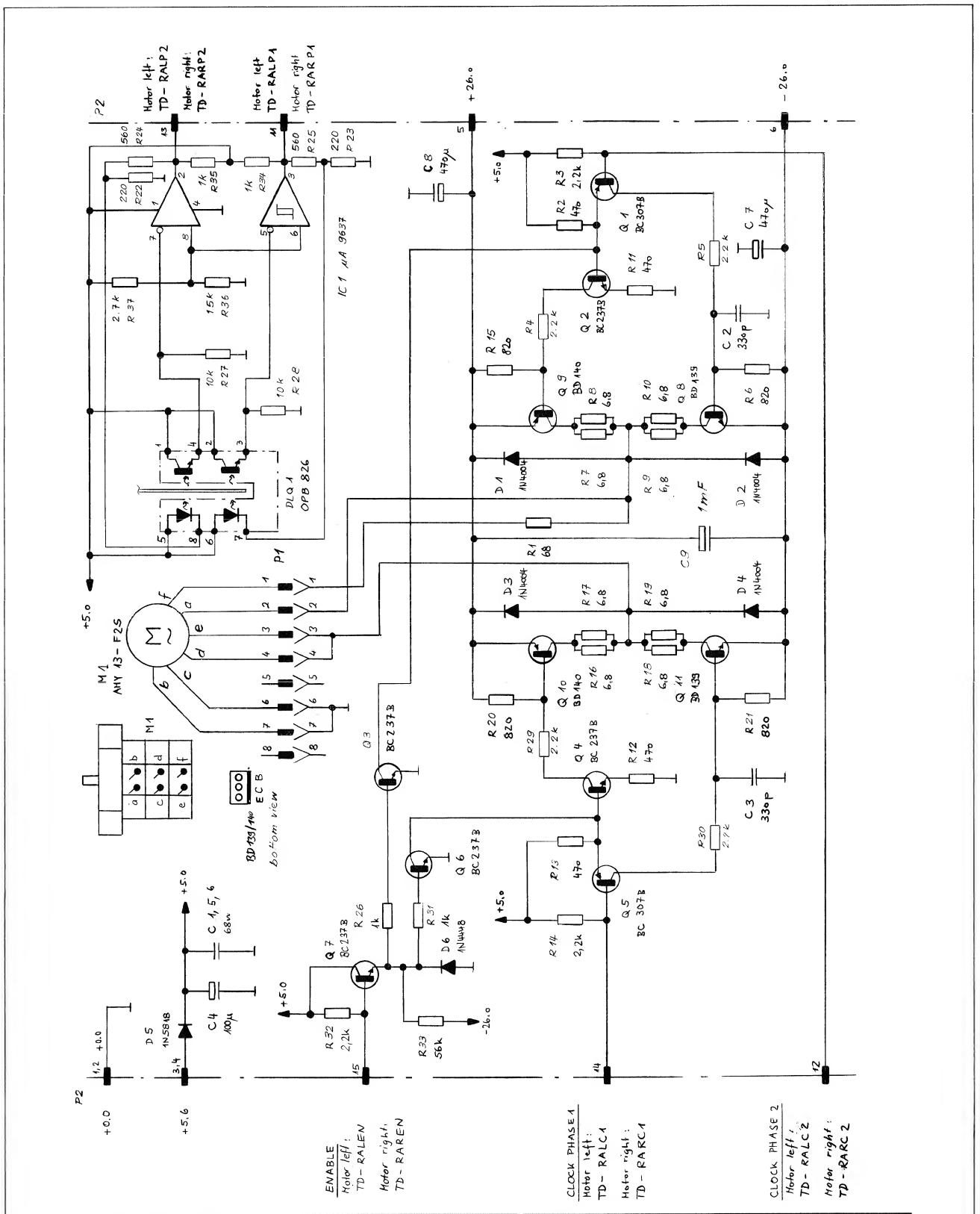

0	9.7.85	A 820 Tape Transport Section		
STUDER	Tape Lifter Control	SC	1.820.773-82	PAGE 1 OF 1

TAPE LIFTER CONTROL BOARD 1.820.773.82

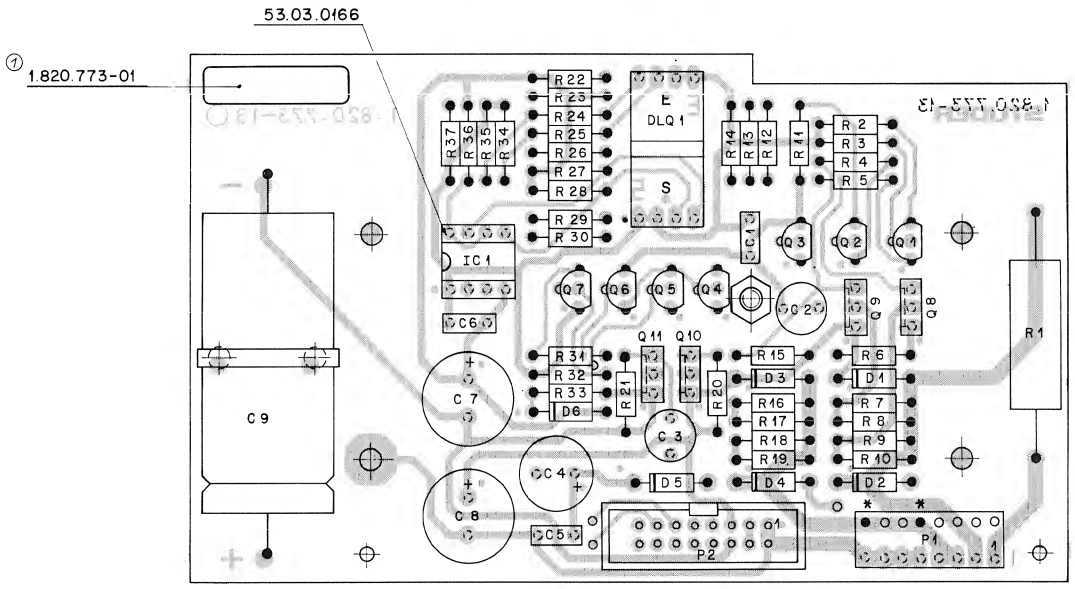

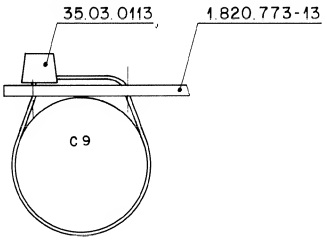

IND.	POS.NO.	PART NO.	VALUE	SPECIFICATIONS / EQUIVALENT	MANUF.
	C.....1	59.06.0683	68 nF	10%, 63V, PETP	
	C.....2	59.05.2331	330 pF	2.5%, 63V, PP	
	C.....3	59.05.2331	330 pF	2.5%, 63V, PP	
	C.....4	59.22.4101	100 uF	10%, 16V, El	
	C.....5	59.06.0683	68 nF	10%, 63V, PETP	
	C.....6	59.06.0683	68 nF	10%, 63V, PETP	
	C.....7	59.22.6471	470 uF	10%, 40V, El	
	C.....8	59.22.6471	470 uF	10%, 40V, El	
	C.....9	59.25.6102	1000 uF	63V, El	
	D.....1	50.04.0122	1N 4001	... 1N 4004	Mot
	D.....2	50.04.0122	1N 4001	... 1N 4004	Mot
	D.....3	50.04.0122	1N 4001	... 1N 4004	Mot
	D.....4	50.04.0122	1N 4001	... 1N 4004	Mot
	D.....5	50.04.0512	1N 5818	1N 5819	Mot
	D.....6	50.04.0125	1N 4448		Fc,ITT,Ph,Sem,TF
	DLQ...1	50.99.0166	OPB 826S		Op
	IC....1	50.15.0114	uA 9637A		TI,Fc
	P.....1	54.01.0289		see note 1	
	P.....2	54.14.2002		see note 2	
	Q.....1	50.03.0515	BC 307 B	BC 251 B, BC 557 B	ITT,Mot,Ph
	Q.....2	50.03.0436	BC 237 B	BC 547 B, BC 550 B	ITT,Mot,Ph,Sie
	Q.....3	50.03.0436	BC 237 B	BC 547 B, BC 550 B	ITT,Mot,Ph,Sie
	Q.....4	50.03.0436	BC 237 B	BC 547 B, BC 550 B	ITT,Mot,Ph,Sie
	Q.....5	50.03.0515	BC 307 B	BC 251 B, BC 557 B	ITT,Mot,Ph
	Q.....6	50.03.0436	BC 237 B	BC 547 B, BC 550 B	ITT,Mot,Ph,Sie
	Q.....7	50.03.0436	BC 237 B	BC 547 B, BC 550 B	ITT,Mot,Ph,Sie
	Q.....8	50.03.0451	BD 139-10		Mot,Ph,SGS,TF,To
	Q.....9	50.03.0452	BD 140-10		Mot,Ph,SGS,TF,To
	Q....10	50.03.0452	BD 140-10		Mot,Ph,SGS,TF,To
	Q....11	50.03.0451	BD 139-10		Mot,Ph,SGS,TF,To
	R.....1	57.56.5680	68 Ohm	10%, 4 W	

IND.	POS.NO.	PART NO.	VALUE	SPECIFICATIONS / EQUIVALENT	MANUF.
	R.....2	57.11.4471	470 Ohm	2%	
	R.....3	57.11.4222	2.2 kOhm	2%	
	R.....4	57.11.4222	2.2 kOhm	2%	
	R.....5	57.11.4222	2.2 kOhm	2%	
	R.....6	57.11.4821	820 Ohm	2%	
	R.....7	57.11.4689	6.8 Ohm	5%	
	R.....8	57.11.4689	6.8 Ohm	5%	
	R.....9	57.11.4689	6.8 Ohm	5%	
	R....10	57.11.4689	6.8 Ohm	5%	
	R....11	57.11.4471	470 Ohm	2%	
	R....12	57.11.4471	470 Ohm	2%	
	R....13	57.11.4471	470 Ohm	2%	
	R....14	57.11.4222	2.2 kOhm	2%	
	R....15	57.11.4821	820 Ohm	2%	
	R....16	57.11.4689	6.8 Ohm	5%	
	R....17	57.11.4689	6.8 Ohm	5%	
	R....18	57.11.4689	6.8 Ohm	5%	
	R....19	57.11.4689	6.8 Ohm	5%	
	R....20	57.11.4821	820 Ohm	2%	
	R....21	57.11.4821	820 Ohm	2%	
	R....22	57.11.4221	220 Ohm	2%	
	R....23	57.11.4221	220 Ohm	2%	
	R....24	57.11.4561	560 Ohm	2%	
	R....25	57.11.4561	560 Ohm	2%	
	R....26	57.11.4102	1 kOhm	2%	
	R....27	57.11.4103	10 kOhm	2%	
	R....28	57.11.4103	10 kOhm	2%	
	R....29	57.11.4222	2.2 kOhm	2%	
	R....30	57.11.4222	2.2 kOhm	2%	
	R....31	57.11.4102	1 kOhm	2%	
	R....32	57.11.4222	2.2 kOhm	2%	
	R....33	57.11.4563	56 kOhm	2%	
	R....34	57.11.4102	1 kOhm	2%	
	R....35	57.11.4102	1 kOhm	2%	
	R....36	57.11.4152	1.5 kOhm	2%	
	R....37	57.11.4272	2.7 kOhm	2%	

Note 1 - Connector: AMP Nr. --163.680-6

Note 2 - Connector: Yamaichi Nr. FAP-16-08//4
Burndy Nr. BPH 9 B 16 BOO G5

El=Electrolytic, PP=Polypropylene

Manufacturer: Fc=Fairchild, ITT=Intermetall, Mot=Motorola, Op=Optron,
Ph=Philips, Sem=Semcosem, SGS=SGS/Ates, Sie=Siemens,
TF=Telefunken, TI=Texas Instruments, To=Toshiba.

ORIG 85/07/08

CAPSTAN MOTOR DRIVE AMPLIFIER 1.820.774.25

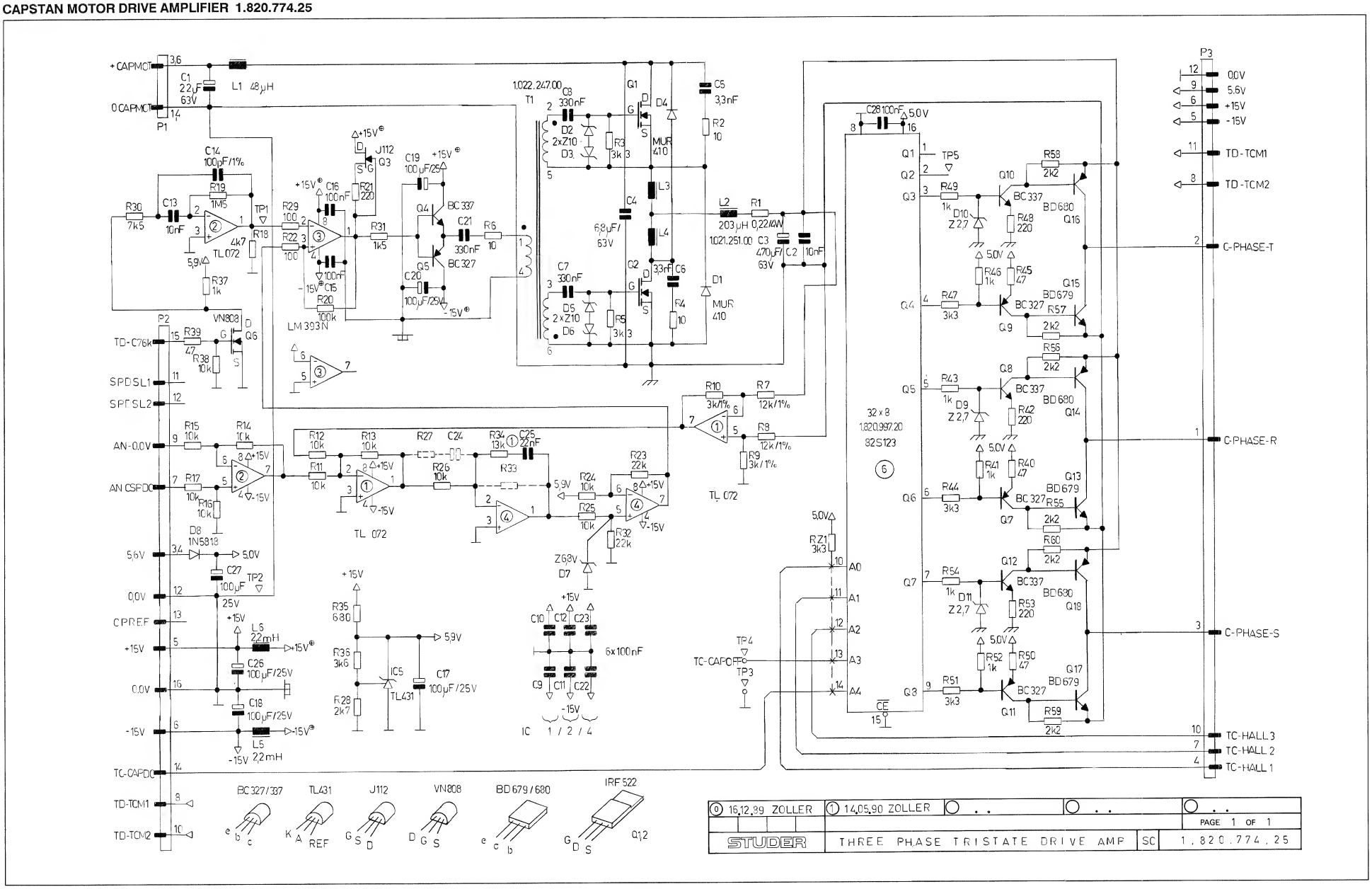

CAPSTAN MOTOR DRIVE AMPLIFIER 1.820.774.25

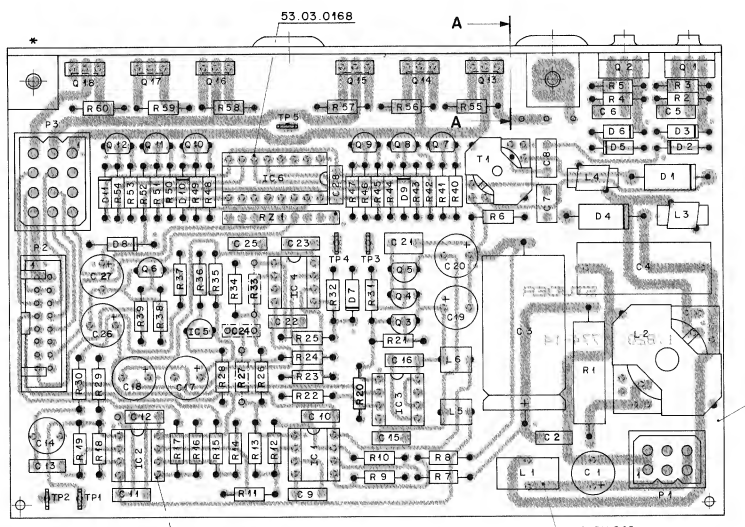

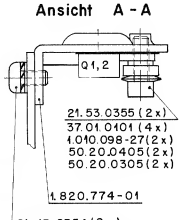

IND.	POS.NO.	PART NO.	VALUE	SPECIFICATIONS / EQUIVALENT	MANUF.
	C....1	59.22.8220	22 uF	-20%, 63V, EL	
	C....2	59.06.0103	10 nF	10%, 63V, PETP	
	C....3	59.25.6471	470 uF	-20%, 63V, EL	
	C....4	59.02.0685	6.8 uF	5%, 63V, MPC	
	C....5	59.06.0332	3.3 nF	10%, 63V, PETP	
	C....6	59.06.0332	3.3 nF	10%, 63V, PETP	
	C....7	59.06.0334	330 nF	10%, 63V, PETP	
	C....8	59.06.0334	330 nF	10%, 63V, PETP	
	C....9	59.06.0104	100 nF	10%, 63V, PETP	
	C....10	59.06.0104	100 nF	10%, 63V, PETP	
	C....11	59.06.0104	100 nF	10%, 63V, PETP	
	C....12	59.06.0104	100 nF	10%, 63V, PETP	
	C....13	59.06.0103	10 nF	10%, 63V, PETP	
	C....14	59.05.1101	100 pF	1%, 63V, PP	
	C....15	59.06.0104	100 nF	10%, 63V, PETP	
	C....16	59.06.0104	100 nF	10%, 63V, PETP	
	C....17	59.22.5101	100 uF	-20%, 25V, EL	
	C....18	59.22.5101	100 uF	-20%, 25V, EL	
	C....19	59.22.5101	100 uF	-20%, 25V, EL	
	C....20	59.22.5101	100 uF	-20%, 25V, EL	
	C....21	59.06.0334	330 nF	10%, 63V, PETP	
	C....22	59.06.0104	100 nF	10%, 63V, PETP	
	C....23	59.06.0104	100 nF	10%, 63V, PETP	
	C....24		not used		
	C....25	59.06.0223	22 nF	10%, 63V, PETP	
	C....26	59.22.5101	100 uF	-20%, 25V, EL	
	C....27	59.22.5101	100 uF	-20%, 25V, EL	
	C....28	59.06.0104	100 nF	10%, 63V, PETP	
	D....1	50.04.0521	MUR 410		Mot,Si
	D....2	50.04.1216	Z 10 V	5%, 1.3W	ITT,Mot,Ph,Tf,SGS
	D....3	50.04.1216	Z 10 V	5%, 1.3W	ITT,Mot,Ph,Tf,SGS
	D....4	50.04.0521	MUR 410		Mot,Si
	D....5	50.04.1216	Z 10 V	5%, 1.3W	ITT,Mot,Ph,Tf,SGS
	D....6	50.04.1216	Z 10 V	5%, 1.3W	ITT,Mot,Ph,Tf,SGS
	D....7	50.04.1102	Z 6.8 V	5%, .40W	ITT,Mot,Ph,Tf,SGS
	D....8	50.04.0512	1N 5818	1N 5819	Mot

S T U D E R (00) 89/12/16 HRH CAP. MOT. DRIVE AMP. BOARD PL 1.820.774.25 PAGE 1

IND.	POS.NO.	PART NO.	VALUE	SPECIFICATIONS / EQUIVALENT	MANUF.
	D....9	50.04.1106	Z 2.7 V	5%, .40W	ITT,Mot,Ph,Tf,SGS
	D....10	50.04.1106	Z 2.7 V	5%, .40W	ITT,Mot,Ph,Tf,SGS
	D....11	50.04.1106	Z 2.7 V	5%, .40W	ITT,Mot,Ph,Tf,SGS
	IC....1	50.09.0101	TL 072 CP		Mot/Ti,NS
	IC....2	50.09.0101	TL 072 CP		Mot/Ti,NS
	IC....3	50.05.0283	LM 393 ..	TDB 0193 DP	NS/Sig/Ti/Tho
	IC....4	50.09.0101	TL 072 CP		Mot/Ti/NS
	IC....5	50.10.0106	TL 431CLP		Mot/Ti
	IC....6	1.820.997.20		Commutation logic device	St
	L....1	62.03.0010	48 uH	2 A, filter	
	L....2	1.022.251.00	203 uH	Filtercoil	St
	L....3	62.99.0113	1.0 uH		
	L....4	62.99.0113	1.0 uH		
	L....5	62.02.3222	2.2 mH	10%, Rad, RM 5	
	L....6	62.02.3222	2.2 mH	10%, Rad, RM 5	
	P....1	54.02.0418	Connector	6 contacts, MOLEX, see note 2	
	P....2	54.14.2102	Connector	16 contacts, Latch, flat cable	
	P....3	54.02.0408	Connector	12 contacts, MOLEX, see note 1	
	Q....1	50.03.1502	IRF 522	MTP 8N10	IR,Mot
	Q....2	50.03.1502	IRF 522	MTP 8N10	IR,Mot
	Q....3	50.03.0350	J-112		Mot
	Q....4	50.03.0340	BC 337-25		ITT,Ph,Sie
	Q....5	50.03.0351	BC 327-25		ITT,Ph,Sie
	Q....6	50.03.1505	VN 0808 M	ZVN 0108 A	Fs,Six
	Q....7	50.03.0351	BC 327-25		ITT,Ph,Sie
	Q....8	50.03.0340	BC 337-25		ITT,Ph,Sie
	Q....9	50.03.0351	BC 327-25		ITT,Ph,Sie
	Q....10	50.03.0340	BC 337-25		ITT,Ph,Sie
	Q....11	50.03.0351	BC 327-25		ITT,Ph,Sie
	Q....12	50.03.0340	BC 337-25		ITT,Ph,Sie
	Q....13	50.03.0749	BD 679	see note 3	Ph
	Q....14	50.03.0799	BD 680	see note 3	Ph
	Q....15	50.03.0749	BD 679	see note 3	Ph

S T U D E R (00) 89/12/16 HRH CAP. MOT. DRIVE AMP. BOARD PL 1.820.774.25 PAGE 2

IND.	POS.NO.	PART NO.	VALUE	SPECIFICATIONS / EQUIVALENT	MANUF.
	Q....16	50.03.0799	BD 680	see note 3	Ph
	Q....17	50.03.0749	BD 679	see note 3	Ph
	Q....18	50.03.0799	BD 680	see note 3	Ph
	R....1	57.56.5228	0.22 Ohm	10%, 4 W, WW	
	R....2	57.11.3100	10 Ohm	10%	
	R....3	57.11.3332	3.3 kOhm	10%	
	R....4	57.11.3100	10 Ohm	10%	
	R....5	57.11.3332	3.3 kOhm	10%	
	R....6	57.11.3100	10 Ohm	10%	
	R....7	57.11.3123	12 kOhm	1%	
	R....8	57.11.3123	12 kOhm	1%	
	R....9	57.11.3302	3 kOhm	1%	
	R....10	57.11.3302	3 kOhm	1%	
	R....11	57.11.3103	10 kOhm	10%	
	R....12	57.11.3103	10 kOhm	10%	
	R....13	57.11.3103	10 kOhm	10%	
	R....14	57.11.3103	10 kOhm	10%	
	R....15	57.11.3103	10 kOhm	10%	
	R....16	57.11.3103	10 kOhm	10%	
	R....17	57.11.3103	10 kOhm	10%	
	R....18	57.11.3472	4.7 kOhm	10%	
	R....19	57.11.5155	1.5 MOhm	10%	
	R....20	57.11.3104	100 kOhm	10%	
	R....21	57.11.3221	220 Ohm	10%	
	R....22	57.11.3101	100 Ohm	10%	
	R....23	57.11.3223	22 kOhm	10%	
	R....24	57.11.3103	10 kOhm	10%	
	R....25	57.11.3103	10 kOhm	10%	
	R....26	57.11.3103	10 kOhm	10%	
	R....27		not used		
	R....28	57.11.3272	2.7 kOhm	1%	
	R....29	57.11.3101	100 Ohm	10%	
	R....30	57.11.3752	7.5 kOhm	1%	
	R....31	57.11.3152	1.5 kOhm	10%	
	R....32	57.11.3223	22 kOhm	10%	
	R....33		not used		

S T U D E R (00) 89/12/16 HRH CAP. MOT. DRIVE AMP. BOARD PL 1.820.774.25 PAGE 3

IND.	POS.NO.	PART NO.	VALUE	SPECIFICATIONS / EQUIVALENT	MANUF.
	R....34	57.11.3133	13 kOhm	1%	
	R....35	57.11.3681	680 Ohm	10%	
	R....36	57.11.3962	3.6 kOhm	1%	
	R....37	57.11.3102	1 kOhm	10%	
	R....38	57.11.3103	10 kOhm	10%	
	R....39	57.11.3470	47 Ohm	10%	
	R....40	57.11.3470	47 Ohm	10%	
	R....41	57.11.3102	1 kOhm	10%	
	R....42	57.11.3221	220 Ohm	10%	
	R....43	57.11.3102	1 kOhm	10%	
	R....44	57.11.3332	3.3 kOhm	10%	
	R....45	57.11.3470	47 Ohm	10%	
	R....46	57.11.3102	1 kOhm	10%	
	R....47	57.11.3332	3.3 kOhm	10%	
	R....48	57.11.3221	220 Ohm	10%	
	R....49	57.11.3102	1 kOhm	10%	
	R....50	57.11.3470	47 Ohm	10%	
	R....51	57.11.3332	3.3 kOhm	10%	
	R....52	57.11.3102	1 kOhm	10%	
	R....53	57.11.3221	220 Ohm	10%	
	R....54	57.11.3102	1 kOhm	10%	
	R....55	57.11.3222	2.2 kOhm	10%	
	R....56	57.11.3222	2.2 kOhm	10%	
	R....57	57.11.3222	2.2 kOhm	10%	
	R....58	57.11.3222	2.2 kOhm	10%	
	R....59	57.11.3222	2.2 kOhm	10%	
	R....60	57.11.3222	2.2 kOhm	10%	
	RZ....1	57.88.4332	Network,	8 * 3.3 KOhm, 2%, SIP 9	
	T.....1	1.022.247.00		Drive Transformer	St
	TP....1	54.02.0320	Connector	1 contact / 2.8*0.8, flat	
	TP....2	54.02.0320	Connector	1 contact / 2.8*0.8, flat	
	TP....3	54.02.0320	Connector	1 contact / 2.8*0.8, flat	
	TP....4	54.02.0320	Connector	1 contact / 2.8*0.8, flat	
	TP....5	54.02.0320	Connector	1 contact / 2.8*0.8, flat	

S T U D E R (00) 89/12/16 HRH CAP. MOT. DRIVE AMP. BOARD PL 1.820.774.25 PAGE 4

IND.	POS.NO.	PART NO.	VALUE	SPECIFICATIONS / EQUIVALENT	MANUF.

Note 1 - Connector,

Case:	Studer Nr.	54.02.0408
	Molex Nr.	03-06-2121
Contact pin:	Studer Nr.	54.02.0406
	Molex Nr.	02-06-0103

Note 2 - Connector,

Case:	Studer Nr.	54.02.0418
	Molex Nr.	03-06-2061
Contact pin:	Studer Nr.	54.02.0406
	Molex Nr.	02-06-0103

Note 3 - For excellent wow and flutter values at 3.75 ips the NPN - respective the PNP - Transistors should be from the same type and manufacturer.

Ce=Ceramic, El=Electrolytic, PETP=Polyester Film, PP=Polypropylen

MANUFACTURER: Ex=Exar, Fe=Ferranti, GI=General Instruments,
ITT=Intermetall, IPS=Integrated Power Semiconductors Ltd.,
MM=Monolitic Memorie Inc., Mot=Motorola,
NS=National Semiconductors, Ph=Philips, Ra=Raytheon,
RCA=Radio Corporation of America, Sie=Siemens, Sig=Signetics,
Sse=Sescosem, Six=Siliconix, SGS=SGS-Ates, St=Studer,
Tf=Telefunken, TI=Texas Instruments, To=Toshiba.

ORIG 89/12/16

S T U D E R (00) 89/12/16 HRH CAP. MOT. DRIVE AMP. BOARD PL 1.820.774.25 PAGE 5

OPTO SENSOR BOARD 1.820.793.82

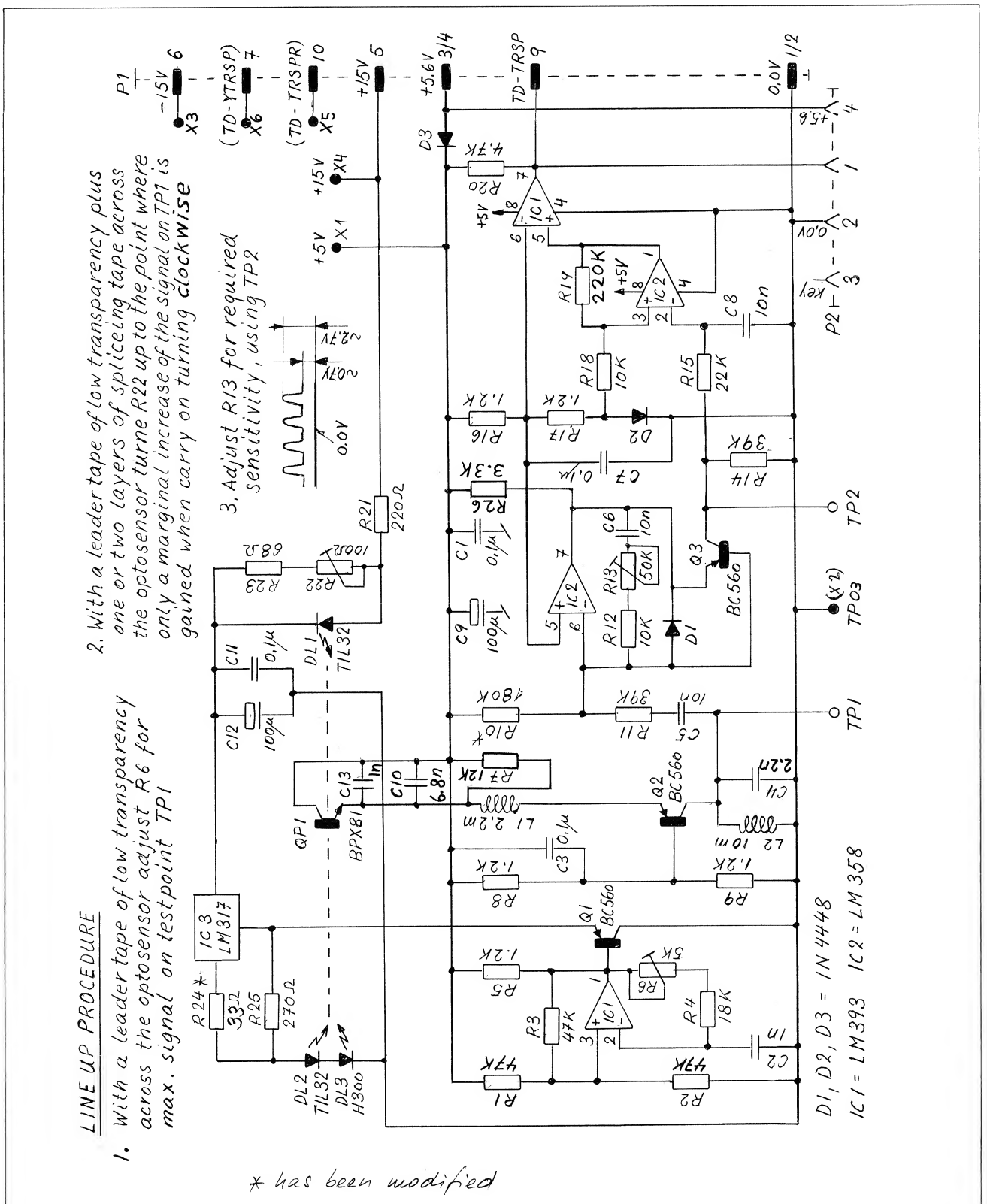

0 8.8.89 Thomsen	1 5.12.89	..	..	..
				PAGE OF
STUDER	OPTOSENSOR A820			1.820.793-82

OPTO SENSOR BOARD 1.820.793.82

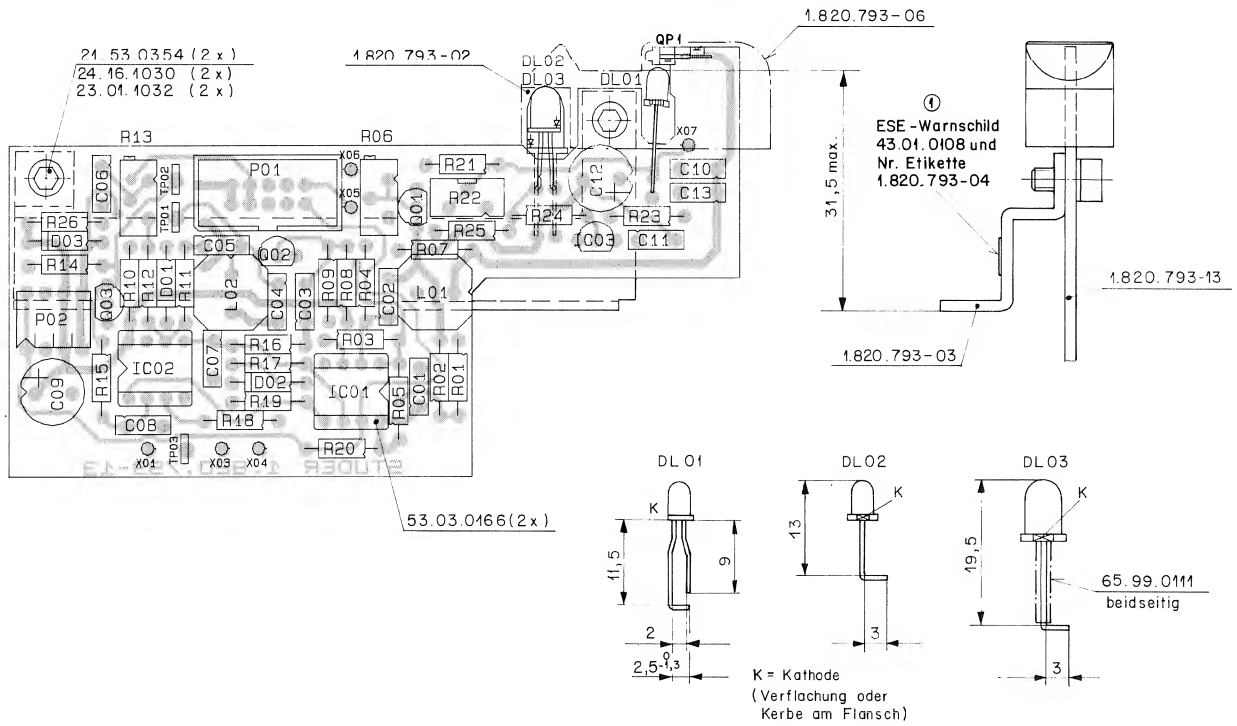

IND.	POS.NO.	PART NO.	VALUE	SPECIFICATIONS / EQUIVALENT	MANUF.
	C.....1	59.06.0104	0.1 uF	10%, 63V , PETP	
	C.....2	59.06.0102	1 nF	10%, 63V , PETP	
	C.....3	59.06.0104	0.1 uF	10%, 63V , PETP	
	C.....4	59.06.5222	2.2 nF	5%, 63V , PETP	
	C.....5	59.06.0103	10 nF	10%, 63V , PETP	
	C.....6	59.06.0103	10 nF	10%, 63V , PEFT	
	C.....7	59.06.0401	0.1 uF	10%, 63V , PETP	
	C.....8	59.06.0103	10 nF	10%, 63V , PETP	
	C.....9	59.22.3101	100 uF	20%, 10V , EL	
	C....10	59.06.5682	6.8 nF	5%, 63V , PETP	
	C....11	59.06.0104	0.1 uF	10%, 63V , PETP	
	C....12	59.22.3101	100 uF	20%, 10V , EL	
	C....13	59.06.0102	1 nF	10%, 63V , PETP	
	D.....1	50.04.0125	1N4448		R-OHM,Fc,ITT,Ph,Tf,Mot
	D.....2	50.04.0125	1N4448		R-OHM,Fc,ITT,Ph,Tf,Mot
	D.....3	50.04.0125	1N4448		R-OHM,Fc,ITT,Ph,Tf,Mot
	DL....1	50.04.2110	OP160SL	LED,IR TIL32	Op,TI
	DL....2	50.04.2110	OP160SL	LED,IR TIL32	Op,TI
	DL....3	50.04.2155	ER300	LED,RED	STY
	IC....1	50.05.0283	LM 393 N	LM 393 P	Tho,NS,TI
	IC....2	50.05.0286	LM 358 M		Mot,NS,SGS,Sig,TI
	IC....3	50.10.0108	LM 317 LZ		Mot,NS
	L.....1	62.02.3222	2.2mH		TDK
	L.....2	62.02.3103	10mH		TDK
	P.....1	54.14.2001	Connector	10 contacts, flat cable	
	P.....2	54.01.0304	Connector	4 contacts, CIS	
	Q.....1	54.03.0496	BC 560		Sie
	Q.....2	54.03.0496	BC 560		Sie
	Q.....3	54.03.0496	BC 560		Sie
	QP....1	50.04.5001	BPX 81		Sie

IND.	POS.NO.	PART NO.	VALUE	SPECIFICATIONS / EQUIVALENT	MANUF.
	R.....1	57.11.3473	47 kOhm	1%	
	R.....2	57.11.3473	47 kOhm	1%	
	R.....3	57.11.3473	47 kOhm	1%	
	R.....4	57.11.3183	18 kOhm	1%	
	R.....5	57.11.3122	1.2 kOhm	1%	
	R.....6	58.05.0502	5 kOhm	10% potentiometer	
	R.....7	57.11.3123	12 kOhm	1%	
	R.....8	57.11.3122	1.2 kOhm	1%	
	R.....9	57.11.3122	1.2 kOhm	1%	
(00)	R....10	57.11.3224	220 kOhm	1%	
(01)	R....10	57.11.3184	180 kOhm	1%	
	R....11	57.11.3393	39 kOhm	1%	
	R....12	57.11.3103	10 Ohm	1%	
	R....13	58.05.0503	50 kOhm	10% Potentiometer	
	R....14	57.11.3393	39 kOhm	1%	
	R....15	57.11.3223	22 kOhm	1%	
	R....16	57.11.3122	1.2 kOhm	1%	
	R....17	57.11.3122	1.2 kOhm	1%	
	R....18	57.11.3103	10 kOhm	1%	
	R....19	57.11.3224	220 kOhm	1%	
	R....20	57.11.3472	4.7 kOhm	1%	
	R....21	57.11.3221	220 Ohm	1%	
	R....22	58.01.9101	100 Ohm	10% Potentiometer	
	R....23	57.11.3680	68 Ohm	1%	
(00)	R....24	57.11.3270	27 Ohm	1%	
(01)	R....24	57.11.3330	33 Ohm	1%	
	R....25	57.11.3271	270 Ohm	1%	
	R....26	57.11.3332	3.3 kOhm	1%	
	TP....1	54.02.0320		test pin	
	TP....2	54.02.0320		test pin	
	TP....3	54.02.0320		test pin	

IND.	POS.NO.	PART NO.	VALUE	SPECIFICATIONS / EQUIVALENT	MANUF.

(01) 05.12.89 Sensitivity correction.

CER=Ceramic, EL=Electrolytic, PETP=Polyester, SAL=Solid Aluminum

Manufacturers: Fc=Fairchild, ITT=Intermetall, Mot=Motorola
N5=National Semiconductors, Op=Optron, Ph=Philips
Ra=Raytheon, See=Seescoem, Sie=Siemens, Sig=Signetics
Sty=Stanley, Tf=Telefunken, Tho=Thomson, TI=Texas Instruments

ORIG 89/08/30 (01) 89/12/05

TAPE DECK COUNTER TIMER 1.820.823.00

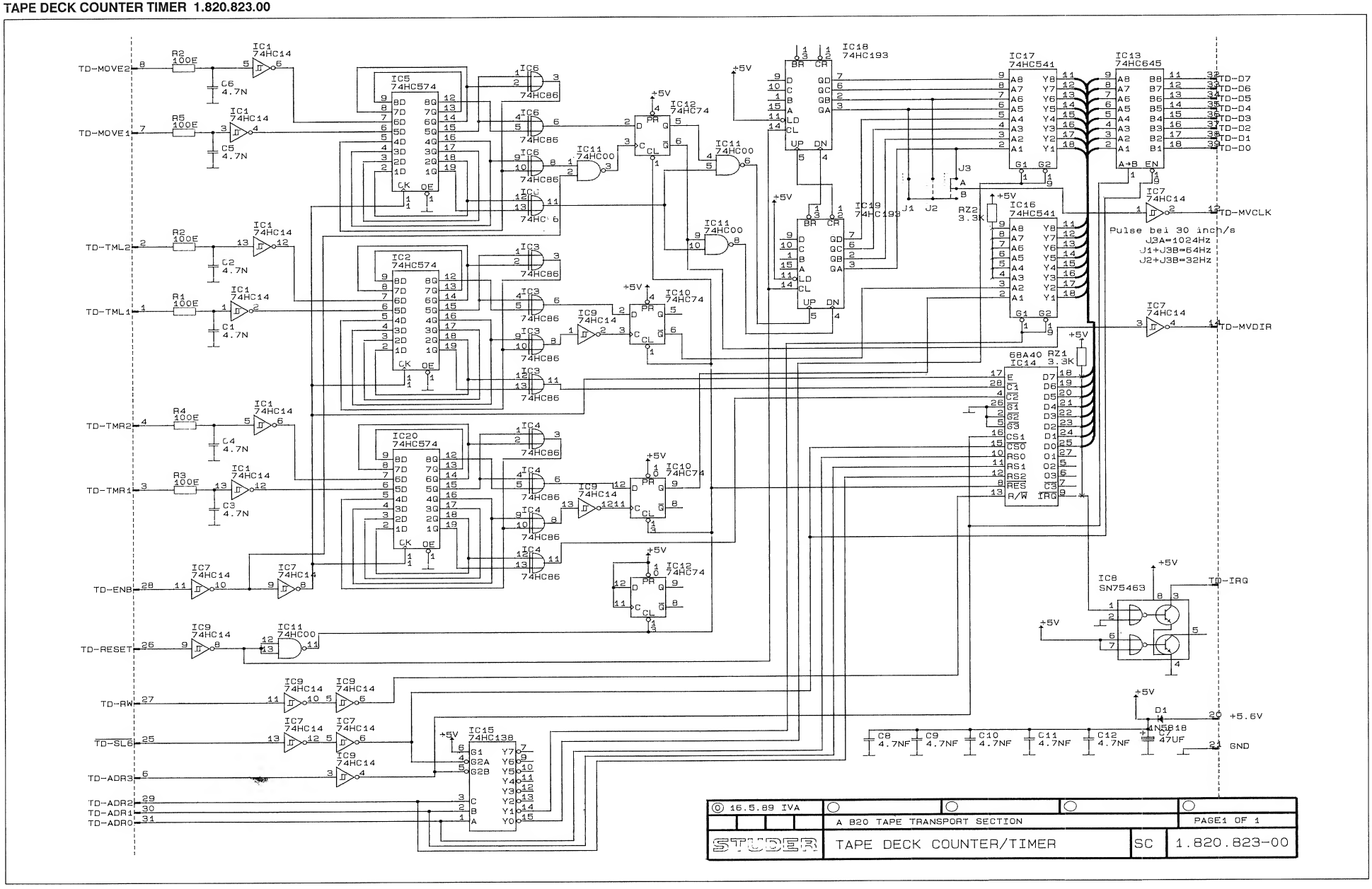

TAPE DECK COUNTER TIMER 1.820.823.00

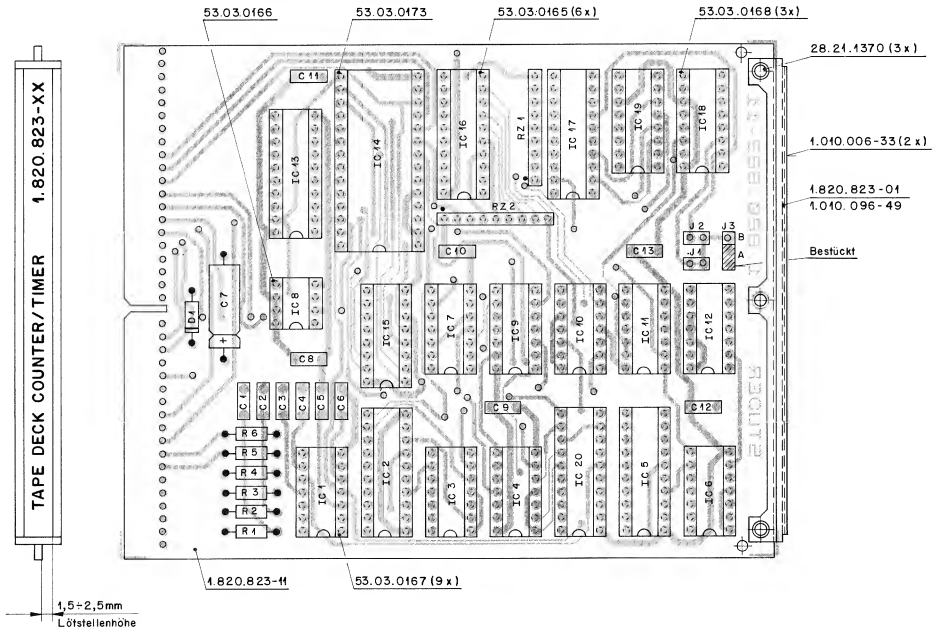

IND.	POS.NO.	PART NO.	VALUE	SPECIFICATIONS / EQUIVALENT	MANUF.
	D.....1	50.04.0512	1N 5818	1N 5819	Mot
	C.....1	59.06.0472	4.7 nF	10%, 63V, PETP	
	C.....2	59.06.0472	4.7 nF	10%, 63V, PETP	
	C.....3	59.06.0472	4.7 nF	10%, 63V, PETP	
	C.....4	59.06.0472	4.7 nF	10%, 63V, PETP	
	C.....5	59.06.0472	4.7 nF	10%, 63V, PETP	
	C.....6	59.06.0472	4.7 nF	10%, 63V, PETP	
	C.....7	59.25.3470	47 nF	16V, El	
	C.....8	59.06.0683	68 nF	10%, 63V, PETP	
	C.....9	59.06.0683	68 nF	10%, 63V, PETP	
	C....10	59.06.0683	68 nF	10%, 63V, PETP	
	C....11	59.06.0683	68 nF	10%, 63V, PETP	
	C....12	59.06.0683	68 nF	10%, 63V, PETP	
	C....13	59.06.0683	68 nF	10%, 63V, PETP	
	IC....1	50.17.1014	74 HC 14	.. 74 HC 14 . Mot,NS,Ph,RCA,TI,To	
	IC....2	50.17.1574	74 HC 574	.. 74 HC 574 . Mot,NS,Ph,RCA,SGS,TI,To	
	IC....3	50.17.1086	74 HC 86	.. 74 HC 86 . Mot,NS,Ph,RCA,SGS,TI,To	
	IC....4	50.17.1086	74 HC 86	.. 74 HC 86 . Mot,NS,Ph,RCA,SGS,TI,To	
	IC....5	50.17.1574	74 HC 574	.. 74 HC 574 . Mot,NS,Ph,RCA,SGS,TI,To	
	IC....6	50.17.1086	74 HC 86	.. 74 HC 86 . Mot,NS,Ph,RCA,SGS,TI,To	
	IC....7	50.17.1014	74 HC 14	.. 74 HC 14 . Mot,NS,Ph,RCA,TI,To	
	IC....8	50.05.0203	SN 75463 P	SN 75463 JG, DS 3613 N NS,TI	
	IC....9	50.17.1014	74 HC 14	.. 74 HC 14 . Mot,NS,Ph,RCA,TI,To	
	IC....10	50.17.1074	74 HC 74	.. 74 HC 74 . Mot,NS,Ph,RCA,SGS,TI,To	
	IC....11	50.17.1000	74 HC 00	.. 74 HC 00 . Mot,NS,Ph,RCA,SGS,TI,To	
	IC....12	50.17.1074	74 HC 74	.. 74 HC 74 . Mot,NS,Ph,RCA,SGS,TI,To	
	IC....13	50.17.1645	74 HC 645	.. 74 HC 645 . Mot,NS,Ph,RCA,SGS,TI,To	
	IC....14	50.16.0113	HD 68A 40P	Hi,Mot	
	IC....15	50.17.1138	74 HC 138	.. 74 HC 138 . Mot,NS,Ph,RCA,SGS,TI,To	
	IC....16	50.17.1541	74 HC 541	.. 74 HC 541 . Mot,NS,Ph,RCA,SGS,TI,To	
	IC....17	50.17.1541	74 HC 541	.. 74 HC 541 . Mot,NS,Ph,RCA,SGS,TI,To	
	IC....18	50.17.1193	74 HC 193	.. 74 HC 193 . Mot,NS,Ph,RCA,SGS,TI,To	
	IC....19	50.17.1193	74 HC 193	.. 74 HC 193 . Mot,NS,Ph,RCA,SGS,TI,To	
	IC....20	50.17.1574	74 HC 574	.. 74 HC 574 . Mot,NS,Ph,RCA,SGS,TI,To	

S T U D E R (00) 88/10/27 BD TAPE DECK COUNTER/TIMER PL 1.820.823.00 PAGE 1

IND.	POS.NO.	PART NO.	VALUE	SPECIFICATIONS / EQUIVALENT	MANUF.
	J.....1			note used	
	J.....2			note used	
	J.....3			see note 1	
	R.....1	57.11.3101	100 Ohm	1%	
	R.....2	57.11.3101	100 Ohm	1%	
	R.....3	57.11.3101	100 Ohm	1%	
	R.....4	57.11.3101	100 Ohm	1%	
	R.....5	57.11.3101	100 Ohm	1%	
	R.....6	57.11.3101	100 Ohm	1%	
	RZ....1	57.88.4332		Network, 8 x 3.3 kOhm, 5%, single line	
	RZ....2	57.88.4332		Network, 8 x 3.3 kOhm, 5%, single line	

Note 1 - Contact pin: Studer Nr. 54.01.0020
Berg Nr. 75 160-102-36
Philips Nr. 2422 025 89303
Bridge: Studer Nr. 54.01.0021
Berg Nr. 65 474-001
Philips Nr. 2422 024 88003

PETP=Polyesterfilm, El=Electrolytic

MANUFACTURER: Hi=Hitachi, Mot=Motorola, NS=National Semiconductors,
Ph=Philips, RCA=RCA Corporation, SGS=SGS/Ates,
TI=Texas Instruments, To=Toshiba.

OSIG 88/10/27

S T U D E R (00) 88/10/27 BD TAPE DECK COUNTER/TIMER PL 1.820.823.00 PAGE 2

MAINS SOFT START BOARD 1.820.830.81

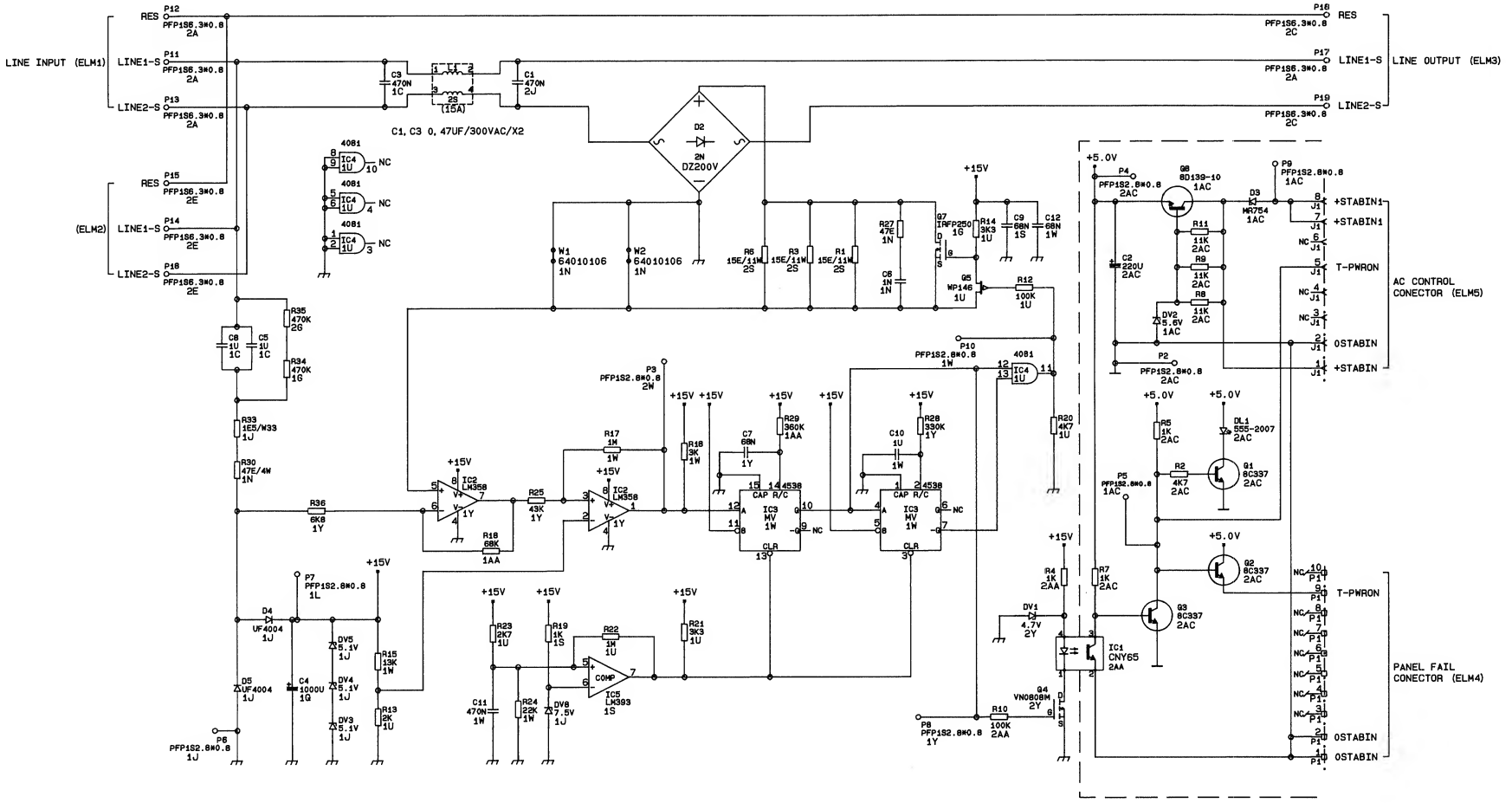

BAUGRUPPE 1.820.830-81 VERWENDET
PCB-LAYOUT 1.820.830-11

0 16.11.89 HRH/GBU				
				PAGE 1 OF 1
STUDER	MAIN SOFT START PCB		SC	1.820.830-81

MAINS SOFT START BOARD 1.820.830.82

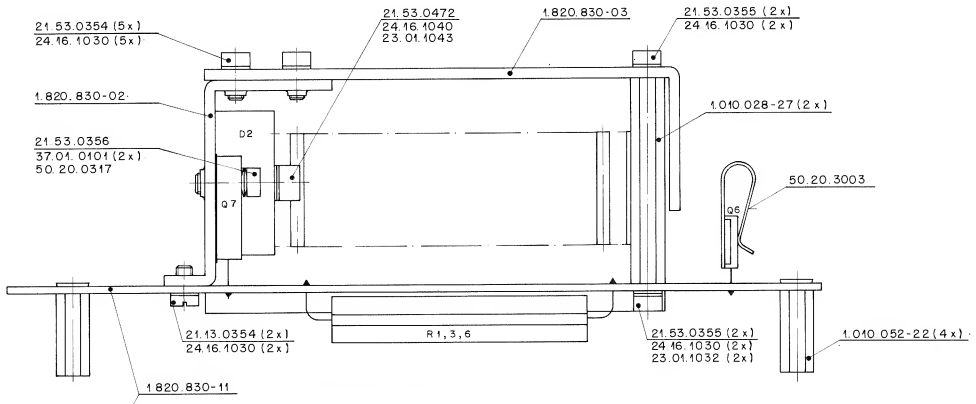

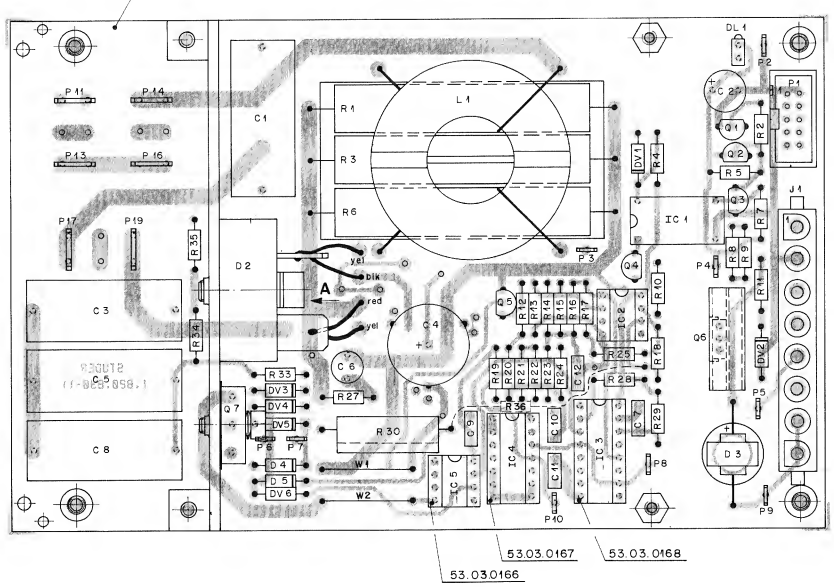

Ansicht von A

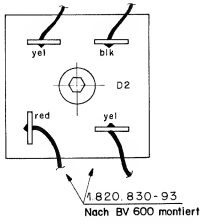

IND.	POS.NO.	PART NO.	VALUE	SPECIFICATIONS / EQUIVALENT	MANUF.
(OO)	C....1	59.31.8105	1 uF	10%, 400V, MPETP	
	C....1	59.14.3474	470 nF	20%, 300V, X2	
	C....2	59.22.3221	220 uF	20%, 10V, El	
(OO)	C....3	59.31.8105	1 uF	10%, 400V, MPETP	
	C....3	59.14.3474	470 nF	20%, 300V, X2	
	C....4	59.22.6102	1000 uF	20%, 40V, El	
(OO)	C....5	59.31.8105	1 uF	10%, 400V, MPETP	
	C....5	59.02.6105	1 uF	5%, 400V, MFC	
	C....6	59.05.2102	1 nF	2.5%, 630V, PP	
	C....7	59.06.0683	68 nF	10%, 63V, PETP	
(OO)	C....8	59.31.8105	1 uF	10%, 400V, MPETP	
	C....8	59.02.6105	1 uF	5%, 400V, MFC	
	C....9	59.06.0683	68 nF	10%, 63V, PETP	
	C....10	59.06.5105	1 uF	5%, 50V, PETP	
	C....11	59.06.5474	470 nF	5%, 63V, PETP	
	C....12	59.06.0683	68 nF	10%, 63V, PETP	
	DL....1	50.04.2107	555-2007	Led,red,dif	Di
	D....2	70.01.0232	KBPC3502	1503-20 200 V / 35 A	IR,Symbol
	D....3	50.04.0518	MR 754		Mot
	D....4	50.04.0138	UF 4004	BYT01-400,UES1106	SGS,The,SI,Un
	D....5	50.04.0138	UF 4004	BYT01-400,UES1106	SGS,The,SI,Un
	DV....1	50.04.1123	4.7 V Z	BZX55-C4V7	ITT,Mot,Ph,Tf,SGS,The
	DV....2	50.04.1108	5.6 V Z	BZX55-C5V6	ITT,Mot,Ph,Tf,SGS,The
	DV....3	50.04.1209	5.1 V Z	BZX85-C5V1	ITT,Mot,Ph,Tf,SGS,The
	DV....4	50.04.1209	5.1 V Z	BZX85-C5V1	ITT,Mot,Ph,Tf,SGS,The
	DV....5	50.04.1209	5.1 V Z	BZX85-C5V1	ITT,Mot,Ph,Tf,SGS,The
(OO)	DV....6	50.04.1114	10 V Z	BZX55-C10	ITT,Mot,Ph,Tf,SGS,The
	DV....6	50.04.1103	7.5 V Z	BZX55-C7V5	ITT,Mot,Ph,Tf,SGS,The
	IC....1	50.04.2148	CNY65		Tf
	IC....2	50.05.0286	LM 358N	LM 358P	Mot,NS,SGS
	IC....3	50.07.1338	MC4538	BCP HEF4070BP, CD4070BE	Mot,NS,Ph
	IC....4	50.07.0081	MC4081BCP	..TC4081BP.	Mot,NS,Ph,RCA,SGS,The,Te
	IC....5	50.05.0283	LM 393P	LM393N, LM393DP	TI,NS,The

S T U D E R (OO) 89/11/16 HRH MAIN SOFT START BOARD PL 1.820.830.81 PAGE 1

IND.	POS.NO.	PART NO.	VALUE	SPECIFICATIONS / EQUIVALENT	MANUF.
	J....1	54.25.0008	8 Cont.	AMP nr. 826051 - 3	
	L....1	62.03.0115		COMMON MODE 15A	
	P....1	54.14.2001	10 cont.	see note 1	
	P....11	54.02.0335	Flatpin	Grothe & Hart nr. 12523 123 014	
	P....12		not used		
	P....13	54.02.0335	Flatpin	Grothe & Hart nr. 12523 123 014	
	P....14	54.02.0335	Flatpin	Grothe & Hart nr. 12523 123 014	
	P....15		not used		
	P....16	54.02.0335	Flatpin	Grothe & Hart nr. 12523 123 014	
	P....17	54.02.0335	Flatpin	Grothe & Hart nr. 12523 123 014	
	P....18		not used		
	P....19	54.02.0335	Flatpin	Grothe & Hart nr. 12523 123 014	
	Q....1	50.03.0516	BC 337 E		Sie
	Q....2	50.03.0516	BC 337 E		Sie
	Q....3	50.03.0516	BC 337 E		Sie
	Q....4	50.03.1505	VN 0808M	ZVN0108	Fe,Six
	Q....5	50.03.0329	WP 146		Six
	Q....6	50.03.0451	BD 139		The,Mot,Ph,SGS,Tf,Te
	Q....7	50.03.1612	IRFP 250		IR
	R....1	57.57.5150	15 Ohm	10%, 11W	
	R....2	57.11.3472	4.7 kOhm	10%	
	R....3	57.57.5150	15 Ohm	10%, 11W	
	R....4	57.11.3102	1 kOhm	10%	
	R....5	57.11.3102	1 kOhm	10%	
	R....6	57.57.5150	15 Ohm	10%, 11W	
	R....7	57.11.3102	1 kOhm	10%	
	R....8	57.11.3113	11 kOhm	2%	
	R....9	57.11.3113	11 kOhm	2%	
	R....10	57.11.3104	100 kOhm	2%	
	R....11	57.11.3113	11 kOhm	2%	
	R....12	57.11.3104	100 kOhm	2%	
	R....13	57.11.3202	2 kOhm	2%	
	R....14	57.11.3332	3.3 kOhm	2%	

S T U D E R (OO) 89/11/16 HRH MAIN SOFT START BOARD PL 1.820.830.81 PAGE 2

IND.	POS.NO.	PART NO.	VALUE	SPECIFICATIONS / EQUIVALENT	MANUF.
	R....15	57.11.3133	13 kOhm	2%	
	R....16	57.11.3302	3 kOhm	2%	
	R....17	57.11.3105	1 MOhm	2%	
	R....18	57.11.3683	68 kOhm	2%	
	R....19	57.11.3102	1 kOhm	2%	
	R....20	57.11.3472	4.7 kOhm	10%	
	R....21	57.11.3332	3.3 kOhm	10%	
	R....22	57.11.3105	1 MOhm	2%	
	R....23	57.11.3272	2.7 kOhm	2%	
	R....24	57.11.3223	22 kOhm	2%	
	R....25	57.11.3433	43 kOhm	2%	
	R....26		not used		
	R....27	57.11.3470	47 Ohm	2%	
	R....28	57.11.3334	330 kOhm	1%	
	R....29	57.11.3364	360 kOhm	1%	
	R....30	57.56.5470	47 Ohm	10%, 4W	
	R....31		not used	replaced by wire bridge	
	R....32		not used	replaced by wire bridge	
	R....33	57.19.0139	1.5 Ohm	5%, Fuse Resistor	
	R....34	57.11.3474	470 kOhm	10%	
	R....35	57.11.3474	470 kOhm	10%	
	R....36	57.11.3682	6.8 kOhm	10%	
	TP....2	54.02.0320	Testpoint		
	TP....3	54.02.0320	Testpoint		
	TP....4	54.02.0320	Testpoint		
	TP....5	54.02.0320	Testpoint		
	TP....6	54.02.0320	Testpoint		
	TP....7	54.02.0320	Testpoint		
	TP....8	54.02.0320	Testpoint		
	TP....9	54.02.0320	Testpoint		
	TP....10	54.02.0320	Testpoint		

S T U D E R (OO) 89/11/16 HRH MAIN SOFT START BOARD PL 1.820.830.81 PAGE 3

IND.	POS.NO.	PART NO.	VALUE	SPECIFICATIONS / EQUIVALENT	MANUF.

Note 1 - Connector,10 contacts:
case: Studer nr. 54.14.2001
Yamaichi nr. FAP-10-08-4055
Burndy nr. BPH 9 910 B00 G5
3M nr. 7610-6002 V2
Panduit nr. 057.010.113

MPETP = Metall Polyesterfilm, PETP = Polyesterfilm, El = Electrolytic,
PP = Polypropylen, MFC=Metalised Polycarbonat.

MANUFACTURER: Di=Dialco, Fe=Ferranti, GI=General Instruments,
IR=International Rectifier, ITT=Intermetall, Mot=Motorola,
NS=National Semiconductors, Ph=Philips, RCA=Radio Corporation of America, SGS=SGS/Ates, Sie=Siemens, Six=Siliconix,
Tf=Telefunken, The=Thomson, TI=Texas Instruments, To=Toshiba,
Un=Unitrode.

ORIS 89/11/16

S T U D E R (OO) 89/11/16 HRH MAIN SOFT START BOARD PL 1.820.830.81 PAGE 4

MAINS SOFT START BOARD 1.820.830.82

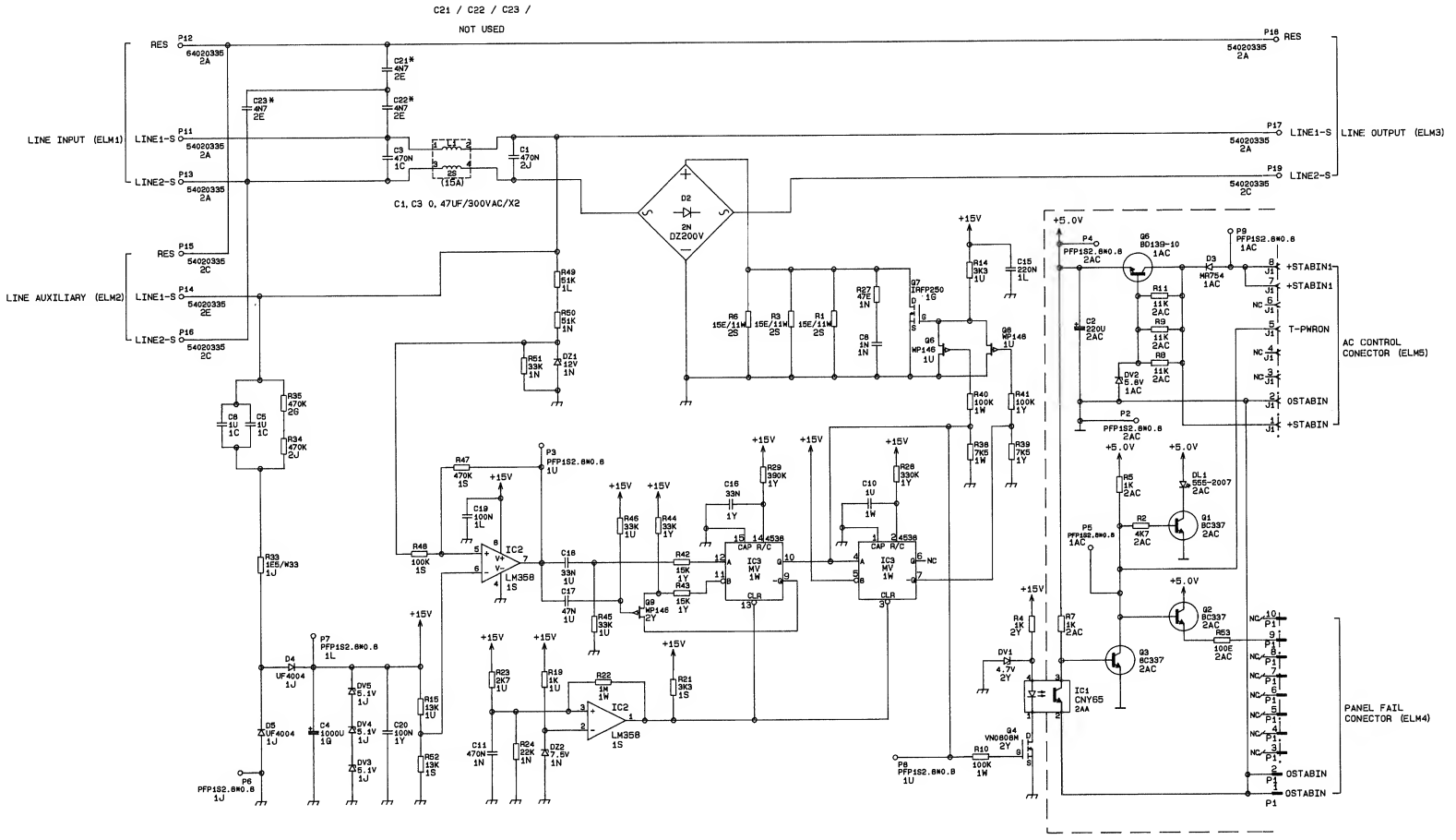

09.05.90 ZW/GBU				PAGE 1 OF 1
STUDER	MAIN SOFT START PCB		SC	1.820.830-82

MAINS SOFT START BOARD 1.820.830.82

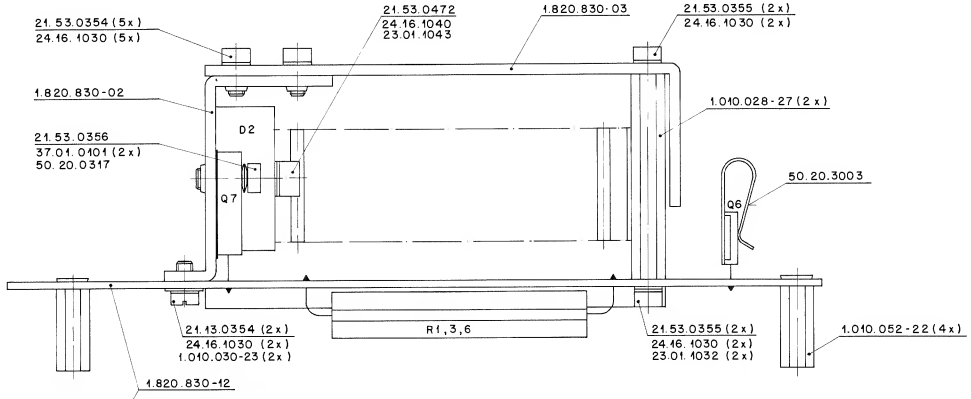

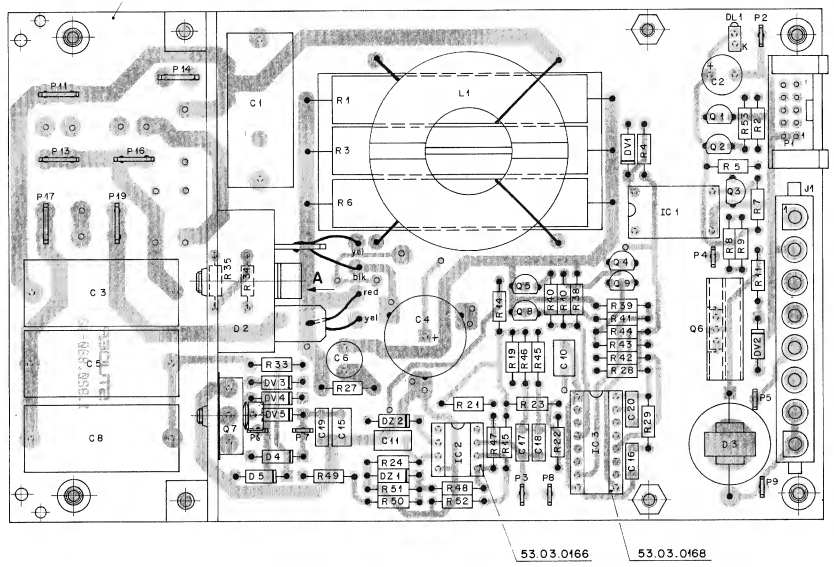

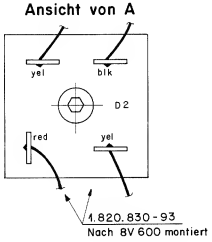

IND.	POS.NO.	PART NO.	VALUE	SPECIFICATIONS / EQUIVALENT	MANUF.
	IC....3	50.07.1538	MC4538	BCP HEF4070BP, CD4070BE	Mot,NS,Ph
	J.....1	54.25.0008	Connector	8 contacts, 12A, AMP	
	L.....1	62.03.0115		Common mode choke 15A	
	MP....1	1.820.830.02		Winkelblech	
	MP....2	1.820.830.03		Deckblech	
	P.....1	54.14.2101	Connector	10 contacts, ribbon-cable, latch	
	P.....2	54.02.0320	Connector	Flat-pin 1P 2.8*0.8 straight	
	P.....3	54.02.0320	Connector	Flat-pin 1P 2.8*0.8 straight	
	P.....4	54.02.0320	Connector	Flat-pin 1P 2.8*0.8 straight	
	P.....5	54.02.0320	Connector	Flat-pin 1P 2.8*0.8 straight	
	P.....6	54.02.0320	Connector	Flat-pin 1P 2.8*0.8 straight	
	P.....7	54.02.0320	Connector	Flat-pin 1P 2.8*0.8 straight	
	P.....8	54.02.0320	Connector	Flat-pin 1P 2.8*0.8 straight	
	P.....9	54.02.0320	Connector	Flat-pin 1P 2.8*0.8 straight	
	P....11	54.02.0335	Connector	Flat-pin 1P 6.3*0.8 straight	
	P....12		not used		
	P....13	54.02.0335	Connector	Flat-pin 1P 6.3*0.8 straight	
	P....14	54.02.0335	Connector	Flat-pin 1P 6.3*0.8 straight	
	P....15		not used		
	P....16	54.02.0335	Connector	Flat-pin 1P 6.3*0.8 straight	
	P....17	54.02.0335	Connector	Flat-pin 1P 6.3*0.8 straight	
	P....18		not used		
	P....19	54.02.0335	Connector	Flat-pin 1P 6.3*0.8 straight	
	PCB...1	1.820.830.12		Empty PCB	
	Q.....1	50.03.0340	BC337	NPN, TO92-1,	Sie
	Q.....2	50.03.0340	BC337	NPN, TO92-1,	Sie
	Q.....3	50.03.0340	BC337	NPN, TO92-1,	Sie
	Q.....4	50.03.1505	VN08QDM	NFET, TO237,	Fa,Six
	Q.....5	50.03.0329	WP146	PFET, TO92-6	Six
	Q.....6	50.03.0451	BD139-10	NPN, TO126-1	Tho,Mot,Ph,SGS,Tf,To
	Q.....7	50.03.1612	IRFP250	NFET, TO247-1,	IR

S T U D E R (00) 90/05/07 HRH MAIN SOFT START PCB PL 1.820.830-82 PAGE 2

IND.	POS.NO.	PART NO.	VALUE	SPECIFICATIONS / EQUIVALENT	MANUF.
	Q.....8	50.03.0329	WP146	PFET, TO92-6	Six
	Q.....9	50.03.0329	WP146	PFET, TO92-6	Six
	R.....1	57.57.5150	15 Ohm	11W, 10%	
	R.....2	57.11.3472	4.7 kOhm	MF, 1%	
	R.....3	57.57.5150	15 Ohm	11W, 10%	
	R.....4	57.11.3102	1 kOhm	MF, 1%	
	R.....5	57.11.3102	1 kOhm	MF, 1%	
	R.....6	57.57.5150	15 Ohm	11W, 10%	
	R.....7	57.11.3102	1 kOhm	MF, 1%	
	R.....8	57.11.3113	11 kOhm	MF, 1%	
	R.....9	57.11.3113	11 kOhm	MF, 1%	
	R....10	57.11.3104	100 kOhm	MF, 1%	
	R....11	57.11.3113	11 kOhm	MF, 1%	
	R....14	57.11.3332	3.3 kOhm	MF, 1%	
	R....15	57.11.3133	13 kOhm	MF, 1%	
	R....19	57.11.3102	1 kOhm	MF, 1%	
	R....21	57.11.3332	3.3 kOhm	MF, 1%	
	R....22	57.11.3105	1 MOhm	MF, 1%	
	R....23	57.11.3272	2.7 kOhm	MF, 1%	
	R....24	57.11.3223	22 kOhm	MF, 1%	
	R....27	57.11.3470	47 Ohm	MF, 1%	
	R....28	57.11.3334	330 kOhm	MF, 1%	
	R....29	57.11.3394	390 kOhm	MF, 1%	
	R....33	57.19.0159	1.5 Ohm	SX, FUSIBLE RESISTOR	
	R....34	57.11.3474	470 kOhm	MF, 1%	
	R....35	57.11.3474	470 kOhm	MF, 1%	
	R....38	57.11.3752	7.5 kOhm	MF, 1%	
	R....39	57.11.3752	7.5 kOhm	MF, 1%	
	R....40	57.11.3104	100 kOhm	MF, 1%	
	R....41	57.11.3104	100 kOhm	MF, 1%	
	R....42	57.11.3153	15 kOhm	MF, 1%	
	R....43	57.11.3153	15 kOhm	MF, 1%	
	R....44	57.11.3333	33 kOhm	MF, 1%	
	R....45	57.11.3333	33 kOhm	MF, 1%	
	R....46	57.11.3333	33 kOhm	MF, 1%	
	R....47	57.11.3474	470 kOhm	MF, 1%	

S T U D E R (00) 90/05/07 HRH MAIN SOFT START PCB PL 1.820.830-82 PAGE 3

IND.	POS.NO.	PART NO.	VALUE	SPECIFICATIONS / EQUIVALENT	MANUF.
	C.....1	59.14.3474	470 nF	300V, 20%,	
	C.....2	59.22.3221	220 nF	10V, 20%,	
	C.....3	59.14.3474	470 nF	300V, 20%,	
	C.....4	59.22.6102	1000 nF	40V, 20%,	
	C.....5	59.02.6105	1 uF	400V, 5%,	
	C.....6	59.05.2102	1 nF	630V, 2.5%,	
	C.....8	59.02.6105	1 uF	400V, 5%,	
	C....10	59.06.5105	1 uF	50V, 5%,	
	C....11	59.06.5474	470 nF	63V, 5%,	
	C....15	59.06.0224	220 nF	63V, 10%,	
	C....16	59.06.5333	33 nF	63V, 5%,	
	C....17	59.06.0473	47 nF	63V, 10%,	
	C....18	59.06.5333	33 nF	63V, 10%,	
	C....19	59.06.0104	100 nF	63V, 10%,	
	C....20	59.06.0104	100 nF	63V, 10%,	
	C....21		not used		
	C....22		not used		
	C....24		not used		
	D.....2	70.01.0232	KBPC3502	35A, 200V	
	D.....3	50.04.0518	HZ754	194.05	
	D.....4	50.04.0138	UF4004	D041	
	D.....5	50.04.0138	UF4004	D041	
	DL....1	50.04.2107	SSS-2007	red, dif	
	DV....1	50.04.1123	Z 4.7V	5%, 0.5W, D035	
	DV....2	50.04.1108	Z 5.6V	5%, 0.5W, D035	
	DV....3	50.04.1209	Z 5.1V	5%, 1.3W, D041	
	DV....4	50.04.1209	Z 5.1V	5%, 1.3W, D041	
	DV....5	50.04.1209	Z 5.1V	5%, 1.3W, D041	
	DZ....1	50.04.1117	Z 12V	5%, 0.5W, D035	
	DZ....2	50.04.1103	Z 7.5V	5%, 0.5W, D035	
	IC....1	50.04.2148	CNY65		Tf
	IC....2	50.05.0286	LM 358N	LM 358P	Mot,NS,SGS

S T U D E R (00) 90/05/07 HRH MAIN SOFT START PCB PL 1.820.830-82 PAGE 1

IND.	POS.NO.	PART NO.	VALUE	SPECIFICATIONS / EQUIVALENT	MANUF.
	R....48	57.11.3104	100 kOhm	MF, 1%	
	R....49	57.11.3513	51 kOhm	MF, 1%	
	R....50	57.11.3513	51 kOhm	MF, 1%	
	R....51	57.11.3333	33 kOhm	MF, 1%	
	R....52	57.11.3133	13 kOhm	MF, 1%	
	R....53	57.11.3101	100 Ohm	MF, 1%	
	XIC...1	53.03.0166		DIL 8-POL	
	XIC...2	53.03.0168		DIL 16-POL	

Note 1 - Connector,10 contacts:
case: Studer nr. 54.14.2001
Yamaichi nr. FAP-10-08-4055
Burndy nr. BPH 9 210 B00 SS
3M nr. 7610-6002 VZ
Panduit nr. 057.010.113

MPETP = Metall Polyesterfilm, PETP = Polyesterfilm, El = Electrolytic,
PP = Polypropylen, MPC=Metalized Polycarbonat.

MANUFACTURER: Di=Dialco, Fa=Ferranti, GI=General Instruments,
IR=International Rectifier, ITT=Intermetall, Mot=Motorola,
NS=National Semiconductors, Ph=Philips, RCA=Radio Corporation,
of America, SGS=SGS/Ates, Sie=Siemens, Six=Silicomix,
Tf=Telefunken, Tho=Thomson, TI=Texas Instruments, To=Toshiba,
Un=Unitrode.

ORIG 90/05/07

S T U D E R (00) 90/05/07 HRH MAIN SOFT START PCB PL 1.820.830-82 PAGE 4

PINCH ROLLER GATE 1.820.831.81

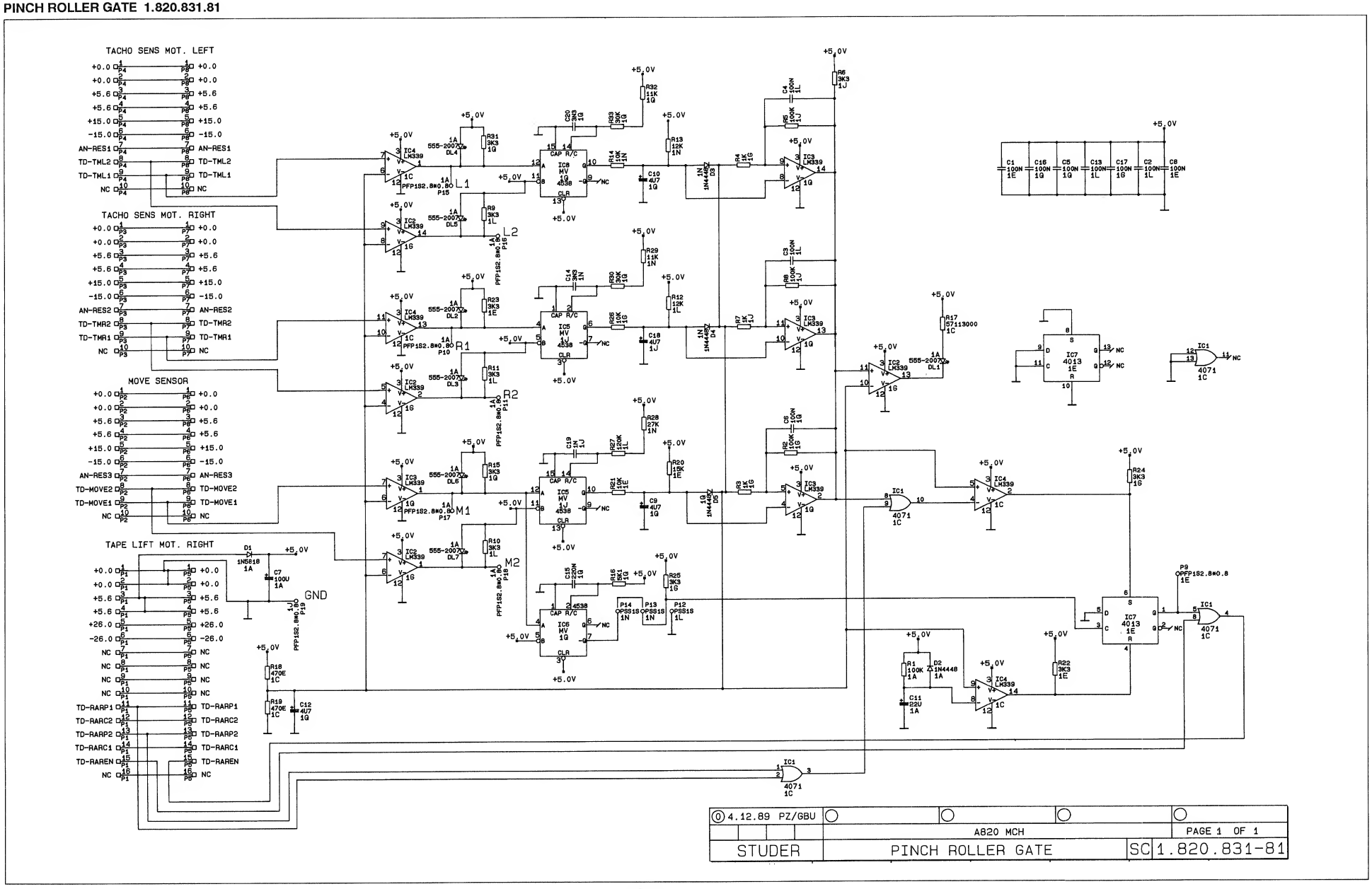

PINCH ROLLER GATE 1.820.831.81

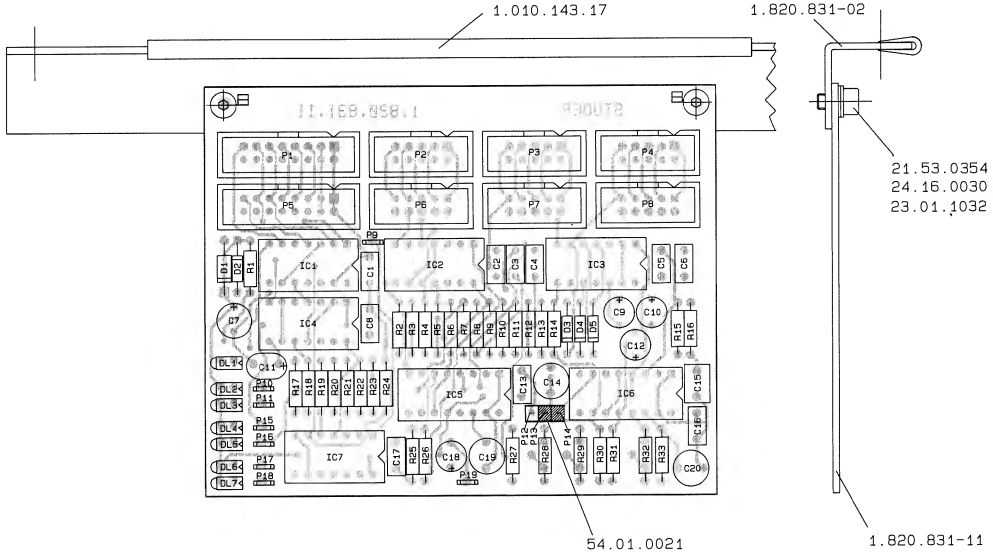

IND.	POS.NO.	PART NO.	VALUE	SPECIFICATIONS / EQUIVALENT	MANUF.
	IC....2	50.11.0104	LM 339	TDB 0139 DF	Mot,NS,SGS
	IC....3	50.11.0104	LM 339	TDB 0139 DF	Mot,NS,SGS
	IC....4	50.11.0104	LM 339	TDB 0139 DF	Mot,NS,SGS
	IC....5	50.07.1538	MC14538BCP	HEF 4538 BF	Mot,Ph
	IC....6	50.07.1538	MC14538BCP	HEF 4538 BF	Mot,Ph
	IC....7	50.07.0013	MC14013BCP	HEF 4013 BF, CD 4013 BE,	Mot,Ph,RCA,SGS
	P.....1	54.14.2002	16 cont.	see note 1	
	P.....2	54.14.2001	10 cont.	see note 2	
	P.....3	54.14.2001	10 cont.	see note 2	
	P.....4	54.14.2001	10 cont.	see note 2	
	P.....5	54.14.2002	16 cont.	see note 1	
	P.....6	54.14.2001	10 cont.	see note 2	
	P.....7	54.14.2001	10 cont.	see note 2	
	P.....8	54.14.2001	10 cont.	see note 2	
	P....9	54.02.0320	Flat-pin	Testpoint	
	P....10	54.02.0320	Flat-pin	Testpoint	
	P....11	54.02.0320	Flat-pin	Testpoint	
	P....12	54.01.0020	Pin-strip	see note 3	
	P....13	54.01.0020	Pin-strip	see note 3	
	P....14	54.01.0020	Pin-strip	see note 3	
	P....15	54.02.0320	Flat-pin	Testpoint	
	P....16	54.02.0320	Flat-pin	Testpoint	
	P....17	54.02.0320	Flat-pin	Testpoint	
	P....18	54.02.0320	Flat-pin	Testpoint	
	P....19	54.02.0320	Flat-pin	Testpoint	
	R.....1	57.11.3104	100 kOhm	2%	
	R.....2	57.11.3104	100 kOhm	2%	
	R.....3	57.11.3102	1 kOhm	2%	
	R.....4	57.11.3102	1 kOhm	2%	
	R.....5	57.11.3104	100 kOhm	2%	
	R.....6	57.11.3332	3.3 kOhm	2%	
	R.....7	57.11.3102	1 kOhm	2%	
	R.....8	57.11.3104	100 kOhm	2%	
	R.....9	57.11.3332	3.3 kOhm	2%	
	R....10	57.11.3332	3.3 kOhm	2%	

IND.	POS.NO.	PART NO.	VALUE	SPECIFICATIONS / EQUIVALENT	MANUF.
	R....11	57.11.3332	3.3 kOhm	2%	
	R....12	57.11.3123	12 kOhm	1%	
	R....13	57.11.3123	12 kOhm	1%	
	R....14	57.11.3103	10 kOhm	1%	
	R....15	57.11.3332	3.3 kOhm	2%	
	R....16	57.11.3512	5.1 kOhm	2%	
	R....17	57.11.3000	0 Ohm		
	R....18	57.11.3471	470 Ohm	1%	
	R....19	57.11.3471	470 Ohm	1%	
	R....20	57.11.3153	15 kOhm	1%	
	R....21	57.11.3103	10 kOhm	1%	
	R....22	57.11.3332	3.3 kOhm	2%	
	R....23	57.11.3332	3.3 kOhm	2%	
	R....24	57.11.3332	3.3 kOhm	2%	
	R....25	57.11.3332	3.3 kOhm	2%	
	R....26	57.11.3103	10 kOhm	1%	
	R....27	57.11.3124	120 kOhm	1%	
	R....28	57.11.3273	27 kOhm	1%	
	R....29	57.11.3113	11 kOhm	1%	
	R....30	57.11.3303	30 kOhm	1%	
	R....31	57.11.3332	3.3 kOhm	2%	
	R....32	57.11.3113	11 kOhm	1%	
	R....33	57.11.3303	30 kOhm	1%	

IND.	POS.NO.	PART NO.	VALUE	SPECIFICATIONS / EQUIVALENT	MANUF.
	C.....1	59.06.0104	100 nF	10%, 63V, PETP	
	C.....2	59.06.0104	100 nF	10%, 63V, PETP	
	C.....3		not used		
	C.....4		not used		
	C.....5	59.06.0104	100 nF	10%, 63V, PETP	
	C.....6		not used		
	C.....7	59.22.3101	100 uF	20%, 25V, El	
	C.....8	59.06.0104	100 nF	10%, 63V, PETP	
	C.....9	59.22.8479	4.7 uF	20%, 63V, El	
	C....10	59.22.8479	4.7 uF	20%, 63V, El	
(00)	C....11	59.06.0224	220 nF	10%, 63V, PETP	
(01)	C....11	59.26.1220	22 uF	20%, 10V, Sal	
	C....12	59.22.8479	4.7 uF	20%, 63V, El	
	C....13	59.06.0104	100 nF	10%, 63V, PETP	
	C....14	59.05.1332	3.3 nF	1%,160V, PF	
	C....15	59.06.0224	220 nF	10%, 63V, PETP	
	C....16	59.06.0104	100 nF	10%, 63V, PETP	
	C....17	59.06.0104	100 nF	10%, 63V, PETP	
	C....18	59.22.8479	4.7 uF	20%, 63V, El	
	C....19	59.05.1102	1 nF	1%,160V, PF	
	C....20	59.05.1332	3.3 nF	1%,160V, PF	
	D.....1	50.04.0512	1N 5818	1N 5819,	Mot
	D.....2	50.04.0125	1N 4448		Fc,ITT,Ph,Sie,Tf
	D.....3	50.04.0125	1N 4448		Fc,ITT,Ph,Sie,Tf
	D.....4	50.04.0125	1N 4448		Fc,ITT,Ph,Sie,Tf
	D.....5	50.04.0125	1N 4448		Fc,ITT,Ph,Sie,Tf
	DL....1	50.04.2107	555-2007	LED, red, dif,	Di
	DL....2	50.04.2107	555-2007	LED, red, dif,	Di
	DL....3	50.04.2107	555-2007	LED, red, dif,	Di
	DL....4	50.04.2107	555-2007	LED, red, dif,	Di
	DL....5	50.04.2107	555-2007	LED, red, dif,	Di
	DL....6	50.04.2107	555-2007	LED, red, dif,	Di
	DL....7	50.04.2107	555-2007	LED, red, dif,	Di
	IC....1	50.07.0022	MC14071BCP	CD 4071 BE, HCF 4071 BE	Mot,RCA,SGS

IND.	POS.NO.	PART NO.	VALUE	SPECIFICATIONS / EQUIVALENT	MANUF.

Note 1 - Connector:
16 contacts, Yamaichi nr. FAP-16-08-40 S5
Burndy nr. BPH 9 B 16 B 00 G5
3M nr. 7616-6002 VZ
Panduit nr. 057.016.113

Note 2 - Connector:
10 contacts, Yamaichi nr. FAP-10-08-40 S5
Burndy nr. BPH 9 B 10 B 00 G5
3M nr. 7610-6002 VZ
Panduit nr. 057.010.113

Note 3 - Jumper switch:
contact pin, Berg nr. 77 311-102-36
Philips nr. 2422 062 43241
Bridge, Studer nr. 54.01.0021
Berg nr. 65 474-001
Philips nr. 2422 024 88003

El=Electrolytic, PETP=Polyesterfilm, PP=Polypropylene,
Sal=Solid Aluminium.

MANUFACTURER: Di=Dialco, Fc=Fairchild, ITT=Intermetall, Mot=Motorola,
NS=National Semiconductors, Ph=Philips, RCA=RCA Corporation,
Sea=Seesosa, SGS=SGS/Ates, Sie=Siemens, Tf=Telefunken.

ORIG 89/12/04

FUSE/SUPPLY FAILURE DETECTOR 1.820.866.00

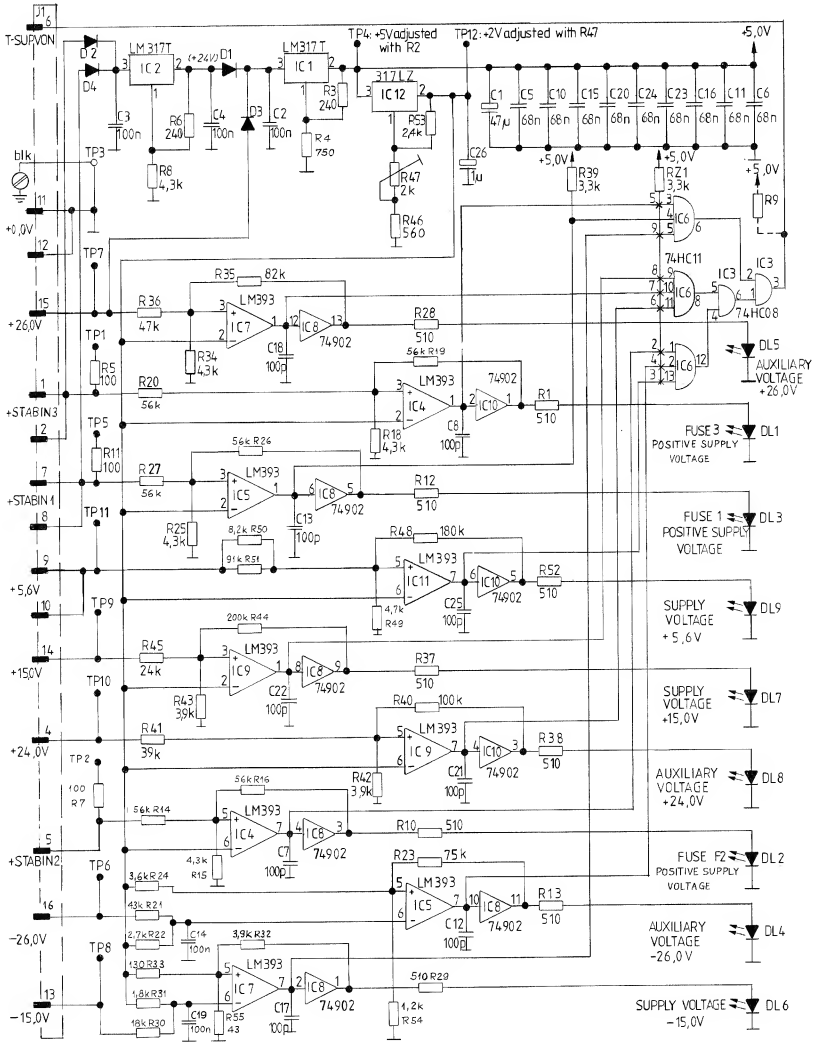

0 7.10.86 Buchegger			
	A 820		PAGE 1 OF 1
STUDER	Fuse / Supply Failure Detector	SC	1.820.866.00

FUSE/SUPPLY FAILURE DETECTOR 1.820.866.00

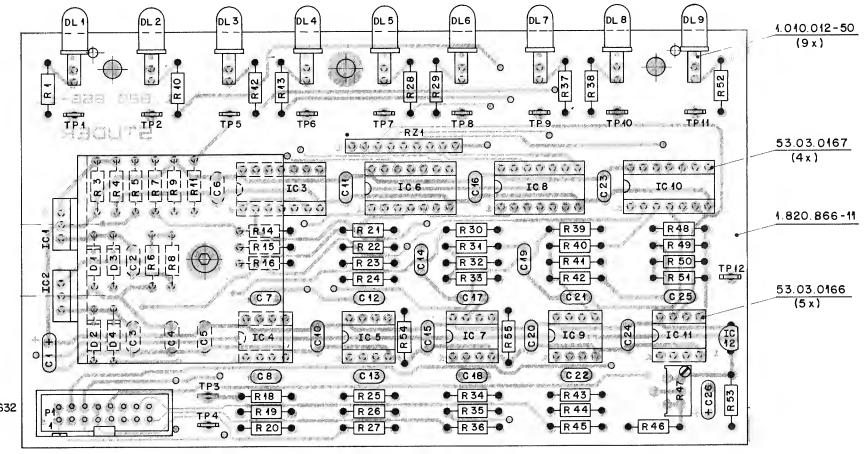

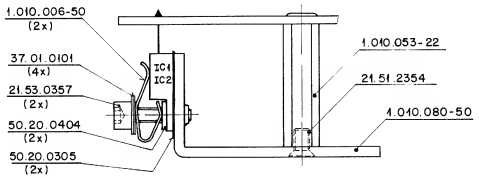

IND.	POS.NO.	PART NO.	VALUE	SPECIFICATIONS / EQUIVALENT	MANUF.
	C....1	59.26.0470	47 uF	20%, 6.3 V, Sal	Ph,Ri
	C....2	59.06.0104	100 nF	10%, PETP	
	C....3	59.06.0104	100 nF	10%, PETP	
	C....4	59.06.0104	100 nF	10%, PETP	
	C....5	59.06.0683	68 nF	20%, PETP	
	C....6	59.06.0683	68 nF	20%, PETP	
	C....7	59.34.4101	100 pF	10%, Cer	
	C....8	59.34.4101	100 pF	10%, Cer	
	C....9		not used		
	C....10	59.06.0683	68 nF	20%, PETP	
	C....11	59.06.0683	68 nF	20%, PETP	
	C....12	59.34.4101	100 pF	10%, Cer	
	C....13	59.34.4101	100 pF	10%, Cer	
	C....14	59.06.0104	100 nF	10%, PETP	
	C....15	59.06.0683	68 nF	20%, PETP	
	C....16	59.06.0683	68 nF	20%, PETP	
	C....17	59.34.4101	100 pF	10%, Cer	
	C....18	59.34.4101	100 pF	10%, Cer	
	C....19	59.06.0104	100 nF	10%, PETP	
	C....20	59.06.0683	68 nF	20%, PETP	
	C....21	59.34.4101	100 pF	10%, Cer	
	C....22	59.34.4101	100 pF	10%, Cer	
	C....23	59.06.0683	68 nF	20%, PETP	
	C....24	59.06.0683	68 nF	20%, PETP	
	C....25	59.34.4101	100 pF	10%, Cer	
	C....26	59.26.9109	1 uF	20%, 6.3 V, Sal	Ph,Ri
	D.....1	50.04.0122	1N 4001	... 1N 4004	GI,Mot
	D.....2	50.04.0122	1N 4001	... 1N 4004	GI,Mot
	D.....3	50.04.0122	1N 4001	... 1N 4004	GI,Mot
	D.....4	50.04.0122	1N 4001	... 1N 4004	GI,Mot
	DL....1	50.04.2113	MV 5453	CM 4-384 B, HLMP-3507	Ma,CM,HP
	DL....2	50.04.2113	MV 5453	CM 4-384 B, HLMP-3507	Ma,CM,HP
	DL....3	50.04.2113	MV 5453	CM 4-384 B, HLMP-3507	Ma,CM,HP
	DL....4	50.04.2113	MV 5453	CM 4-384 B, HLMP-3507	Ma,CM,HP
	DL....5	50.04.2113	MV 5453	CM 4-384 B, HLMP-3507	Ma,CM,HP

S T U D E R (01) 86/12/15 BD FUSE/SUPPLY FAILURE DETECTOR PL 1.820.866.00 PAGE 1

IND.	POS.NO.	PART NO.	VALUE	SPECIFICATIONS / EQUIVALENT	MANUF.
	DL....6	50.04.2113	MV 5453	CM 4-384 B, HLMP-3507	Ma,CM,HP
	DL....7	50.04.2113	MV 5453	CM 4-384 B, HLMP-3507	Ma,CM,HP
	DL....8	50.04.2113	MV 5453	CM 4-384 B, HLMP-3507	Ma,CM,HP
	DL....9	50.04.2113	MV 5453	CM 4-384 B, HLMP-3507	Ma,CM,HP
	IC....1	50.10.0104	LM 317 T	... KC, ... SP	NS,Mot,SGS,Tho,TI
	IC....2	50.10.0104	LM 317 T	... KC, ... SP	NS,Mot,SGS,Tho,TI
	IC....3	50.17.1008	74 HC 08		Ph,Mot,NS,RCA,To,TI
	IC....4	50.05.0283	LM 393 N	LM 393 P	TI,NS
	IC....5	50.05.0283	LM 393 N	LM 393 P	TI,NS
	IC....6	50.17.1011	74 HC 11		Ph,Mot,NS,RCA,To,TI
	IC....7	50.05.0283	LM 393 N	LM 393 P	TI,NS
	IC....8	50.07.0902	74 C902 N		NS
	IC....9	50.05.0283	LM 393 N	LM 393 P	TI,NS
	IC....10	50.07.0902	74 C902 N		NS
	IC....11	50.05.0283	LM 393 N	LM 393 P	TI,NS
	IC....12	50.10.0108	LM 317 LZ		NS/Mot
	P.....1	54.14.2002		see note 1	
	R.....1	57.11.3511	510 Ohm	2%	
	R.....2		not used		
	R.....3	57.11.3241	240 Ohm	2%	
	R.....4	57.11.3751	750 Ohm	2%	
	R.....5	57.19.0101	100 Ohm	10%	
	R.....6	57.11.3241	240 Ohm	2%	
	R.....7	57.19.0101	100 Ohm	10%	
	R.....8	57.11.3432	4.3 kOhm	2%	
	R.....9		not used		
	R....10	57.11.3511	510 Ohm	2%	
	R....11	57.19.0101	100 Ohm	10%	
	R....12	57.11.3511	510 Ohm	2%	
	R....13	57.11.3511	510 Ohm	2%	
	R....14	57.11.3623	62 kOhm	2%	
	R....14	57.11.3563	56 kOhm	2%	
	R....15	57.11.3432	4.3 kOhm	2%	
	R....16	57.11.3913	91 kOhm	2%	

S T U D E R (01) 86/12/15 BD FUSE/SUPPLY FAILURE DETECTOR PL 1.820.866.00 PAGE 2

IND.	POS.NO.	PART NO.	VALUE	SPECIFICATIONS / EQUIVALENT	MANUF.
(01)	R....16	57.11.3563	56 kOhm	2%	
	R....17		not used		
	R....18	57.11.3432	4.3 kOhm	2%	
(00)	R....19	57.11.3913	91 kOhm	2%	
(01)	R....19	57.11.3563	56 kOhm	2%	
(00)	R....20	57.11.3623	62 kOhm	2%	
(01)	R....20	57.11.3563	56 kOhm	2%	
	R....21	57.11.3433	43 kOhm	2%	
	R....22	57.11.3272	2.7 kOhm	2%	
	R....23	57.11.3753	75 kOhm	2%	
	R....24	57.11.3362	3.6 kOhm	2%	
	R....25	57.11.3432	4.3 kOhm	2%	
(00)	R....26	57.11.3913	91 kOhm	2%	
(01)	R....26	57.11.3563	56 kOhm	2%	
(00)	R....27	57.11.3623	62 kOhm	2%	
(01)	R....27	57.11.3563	56 kOhm	2%	
	R....28	57.11.3511	510 Ohm	2%	
	R....29	57.11.3511	510 Ohm	2%	
	R....30	57.11.3183	18 kOhm	1%	
	R....31	57.11.3182	1.8 kOhm	1%	
(00)	R....32	57.11.3682	6.8 kOhm	1%	
(01)	R....32	57.11.3392	3.9 kOhm	1%	
	R....33	57.11.3131	130 Ohm	1%	
	R....34	57.11.3432	4.3 kOhm	2%	
	R....35	57.11.4823	82 kOhm	2%	
	R....36	57.11.4473	47 kOhm	2%	
	R....37	57.11.3511	510 Ohm	2%	
	R....38	57.11.3511	510 Ohm	2%	
(00)	R....39	57.11.3332	3.3 kOhm	10%	
(01)	R....39	57.11.4332	3.3 kOhm	10%	
	R....40	57.11.4104	100 kOhm	2%	
	R....41	57.11.4393	39 kOhm	2%	
	R....42	57.11.3392	3.9 kOhm	2%	
	R....43	57.11.3392	3.9 kOhm	1%	
(00)	R....44	57.11.3184	180 kOhm	1%	
(01)	R....44	57.11.3204	200 kOhm	1%	
	R....45	57.11.3243	24 kOhm	1%	

S T U D E R (01) 86/12/15 BD FUSE/SUPPLY FAILURE DETECTOR PL 1.820.866.00 PAGE 3

IND.	POS.NO.	PART NO.	VALUE	SPECIFICATIONS / EQUIVALENT	MANUF.
	R....46	57.11.4561	560 Ohm	2%	
	R....47	58.05.1202	2 kOhm	see note 2	
	R....48	57.11.3184	180 kOhm	1%	
(00)	R....49	57.11.3432	4.3 kOhm	1%	
(01)	R....49	57.11.3472	4.7 kOhm	1%	
(00)	R....50	57.11.3333	33 kOhm	1%	
(01)	R....50	57.11.3822	8.2 kOhm	1%	
(00)	R....51	57.11.3912	9.1 kOhm	1%	
(01)	R....51	57.11.3913	91 kOhm	1%	
	R....52	57.11.3511	510 Ohm	2%	
	R....53	57.11.3242	2.4 kOhm	2%	
	R....54	57.11.3122	1.2 kOhm	1%	
	R....55	57.11.3430	43 Ohm	1%	
	RZ....1	57.88.4332		see note 3	
	TP....1	54.02.0320		Testpoint	
	TP....2	54.02.0320		Testpoint	
	TP....3	54.02.0320		Testpoint	
	TP....4	54.02.0320		Testpoint	
	TP....5	54.02.0320		Testpoint	
	TP....6	54.02.0320		Testpoint	
	TP....7	54.02.0320		Testpoint	
	TP....8	54.02.0320		Testpoint	
	TP....9	54.02.0320		Testpoint	
	TP....10	54.02.0320		Testpoint	
	TP....11	54.02.0320		Testpoint	
	TP....12	54.02.0320		Testpoint	

S T U D E R (01) 86/12/15 BD FUSE/SUPPLY FAILURE DETECTOR PL 1.820.866.00 PAGE 4

(01) 15.12.86 Improved accuracy of voltage measurement.

Note 1 - Plug, 16 contacts: Yamaichi nr. FAP-16-08/4
Burndy nr. BPH 9 B 16 E00 G5

Note 2 - 2 kOhm Potentiometer: Bourns nr. 3296 Y-1-202
Spectrol nr. 64 Y 202 T 000
Contelec nr. 183 WZ 202
Murata nr. POT 3103 Y - 1 - 202

Note 3 - 8 x 3.3 kOhm Network: Sicovend nr. C09 X 3.3 K J
Ineltro nr. R88 3.3 K 5%

Cer=Ceramic, PETP=Polyesterfilm, Sal=Solid aluminium.

MANUFACTURER: CM=Chicago Miniatur, GI=General Instruments,
HP=Hewlet Packard, ITT=Intermetall, Mot=Motorola,
Ma=Monsanto, NS=National Semiconductors, Ph=Philips,
RCA=RCA Corporation of America, Ri=Rifa, SGS=SGS / Ates,
Si=Siemens, Tho=Thomson CSF, TI=Texas Instuments,
To=Toshiba.

ORIG 86/07/17 (01) 86/12/15

IND.	POS.NO.	PART NO.	VALUE	SPECIFICATIONS / EQUIVALENT	MANUF.

S T U D E R (01) 86/12/15 BD FUSE/SUPPLY FAILURE DETECTOR PL 1.820.866.00 PAGE 5

POWER FAIL SENSE BOARD 1.820.869.00

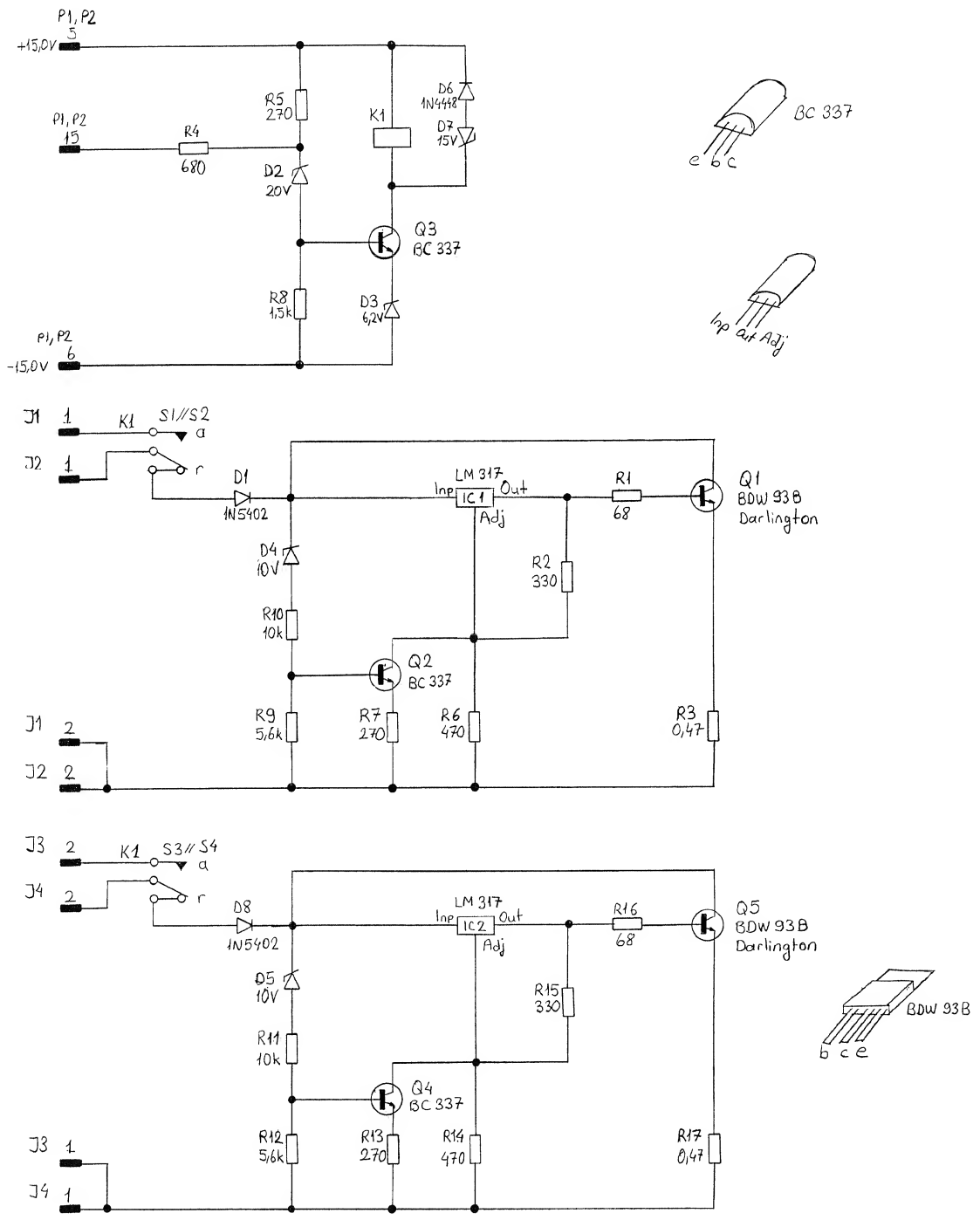

12.2.87 ND				
STUDER	POWER FAIL SENSE BOARD		1.820.869-00	PAGE 1 OF 1

POWER FAIL SENSE BOARD 1.820.869.00

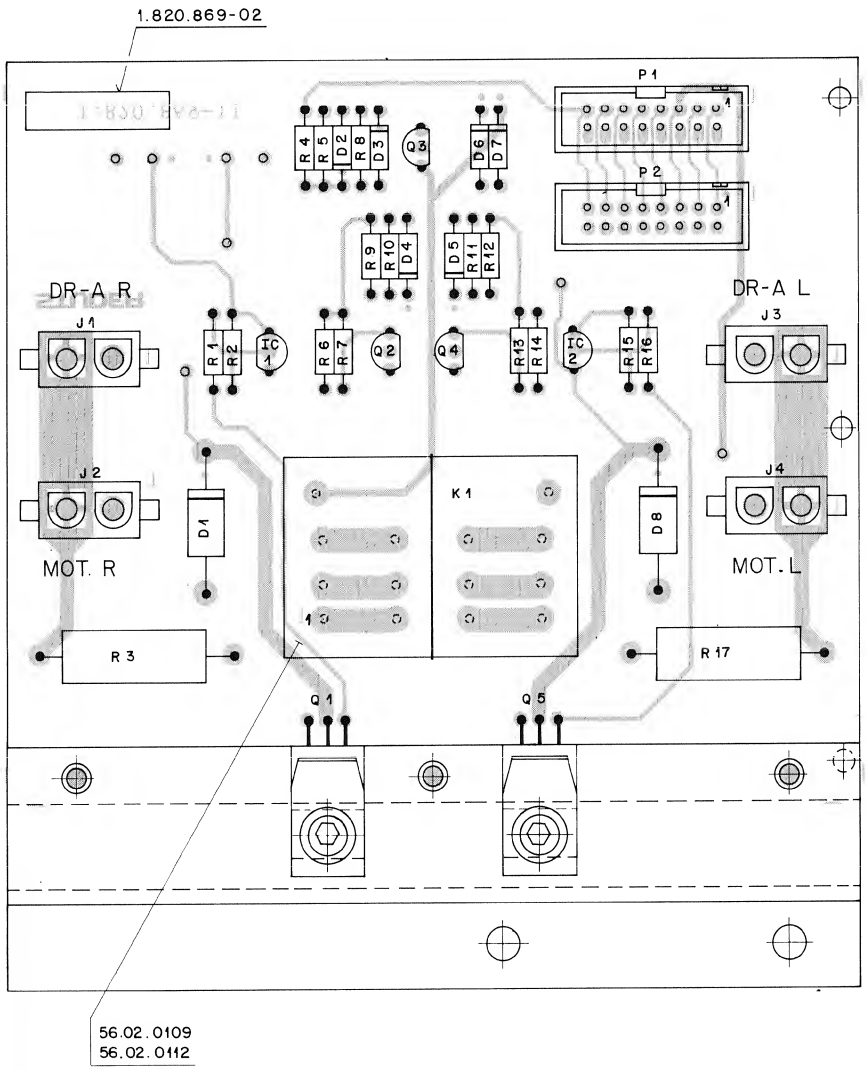

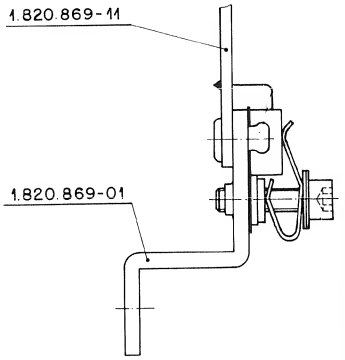

IND.	POS.NO.	PART NO.	VALUE	SPECIFICATIONS / EQUIVALENT	MANUF.
	D.....1	50.04.0507	1N 5402	1N 5403, MR 502RL	GI,Mot
	D.....2	50.04.1109	20 V Z	BZX 55-C20	ITT,Mot,Ph,Tho,Tf
(00)	D.....3	50.04.1118	6.2 V Z	BZX 55-C6V2	ITT,Mot,Ph,Tho,Tf
(01)	D.....3	50.04.1511	6.2 V Z	BZX 85-C6V2	ITT,Mot,Ph,Tf,SGS,Tho
	D.....4	50.04.1114	10 V Z	BZX 55-C10	ITT,Mot,Ph,Tho,Tf
	D.....5	50.04.1114	10 V Z	BZX 55-C10	ITT,Mot,Ph,Tho,Tf
	D.....6	50.04.0125	1N 4448		Fc,ITT,Ph,See,Tf
	D.....7	50.04.1119	15 V Z	BZX 55-C15	ITT,Mot,Ph,Tho,Tf
	D.....8	50.04.0507	1N 5402	1N 5403, MR 502RL	GI,Mot
	IC....1	50.10.0108	LM 317 LZ		Mot,Nat
	IC....2	50.10.0108	LM 317 LZ		Mot,Nat
	J.....1	54.25.0002		see note 1	
	J.....2	54.25.0002		see note 1	
	J.....3	54.25.0002		see note 1	
	J.....4	54.25.0002		see note 1	
	K.....1	56.02.0108	24 V DC	Ly 4	Omron
	P.....1	54.14.2002		see note 2	
	P.....2	54.14.2002		see note 2	
	Q.....1	50.03.0512	BD 899 A	BDW 93 B	Mot,SGS
	Q.....2	50.03.0340	BC 337-25		ITT,NS,Ph,Sie
	Q.....3	50.03.0340	BC 337-25		ITT,NS,Ph,Sie
	Q.....4	50.03.0340	BC 337-25		ITT,NS,Ph,Sie
	Q.....5	50.03.0512	BD 899 A	BDW 93 B	Mot,SGS
	R.....1	57.11.4680	68 Ohm	5%	
	R.....2	57.11.4331	330 Ohm	5%	
	R.....3	57.56.5478	0.47 Ohm	10%, 4 Watt	
	R.....4	57.11.4681	680 Ohm	5%	
	R.....5	57.11.4271	270 Ohm	5%	
	R.....6	57.11.4471	470 Ohm	5%	
	R.....7	57.11.4271	270 Ohm	5%	
	R.....8	57.11.4152	1.5 kOhm	5%	

S T U D E R (01) 89/02/24 BD POWER FAIL SENSE BOARD PL 1.820.869.00 PAGE 1

IND.	POS.NO.	PART NO.	VALUE	SPECIFICATIONS / EQUIVALENT	MANUF.
	R.....9	57.11.4562	5.6 kOhm	5%	
	R....10	57.11.4103	10 kOhm	5%	
	R....11	57.11.4103	10 kOhm	5%	
	R....12	57.11.4562	5.6 kOhm	5%	
	R....13	57.11.4271	270 Ohm	5%	
	R....14	57.11.4471	470 Ohm	5%	
	R....15	57.11.4331	330 Ohm	5%	
	R....16	57.11.4680	68 Ohm	5%	
	R....17	57.56.5478	0.47 Ohm	10%, 4 Watt	

(01) 24.02.89 Improved operating temperature.

Note 1 - Connector, 2 contacts: AMP Nr. 826846-3

Note 2 - Connector,26 contacts: Yamaichi Nr. FAP-16-08-4055
Burndy Nr. BPH 9 B16 B00 GS
3M Nr. 7616-6002 VZ

MANUFACTURER: Fc=Fairchild, GI=General Instruments, ITT=Intermetal,
Mot=Motorola, Nat=National, NS=National Semiconductors,
Ph=Philips, See=Seecoem, SGS=SGS\Atee, Sie=Siemens,
Tf=Telefunken, Tho=Thomson

ORIG 87/04/02 (01) 89/02/24

S T U D E R (01) 89/02/24 BD POWER FAIL SENSE BOARD PL 1.820.869.00 PAGE 2

POWER FAIL SENSE BOARD 1.820.869.81

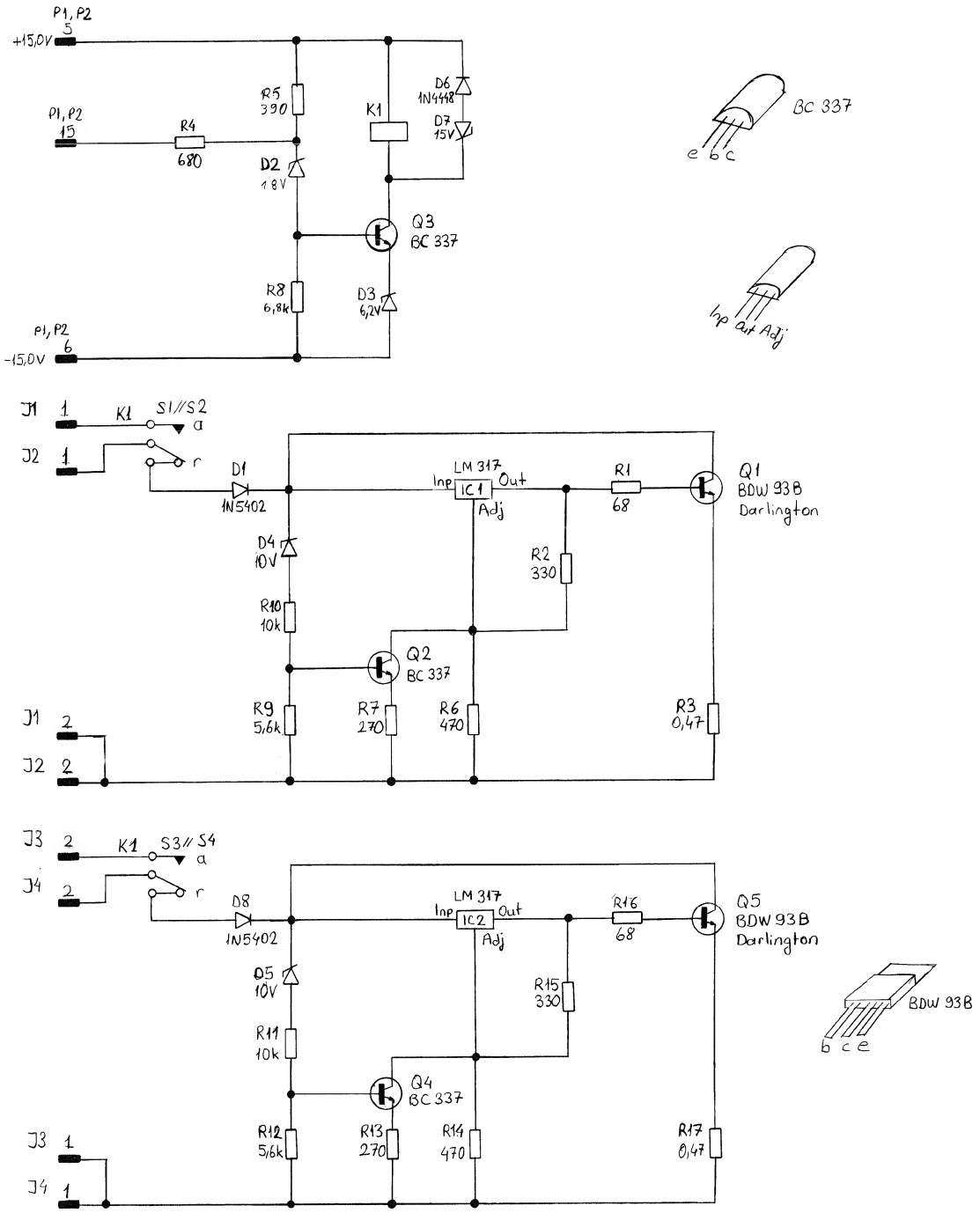

7.6.90 VF				
STUDER	POWER FAIL SENSE BOARD		1.820.869-81	PAGE 1 OF 1

POWER FAIL SENSE BOARD 1.820.869.81

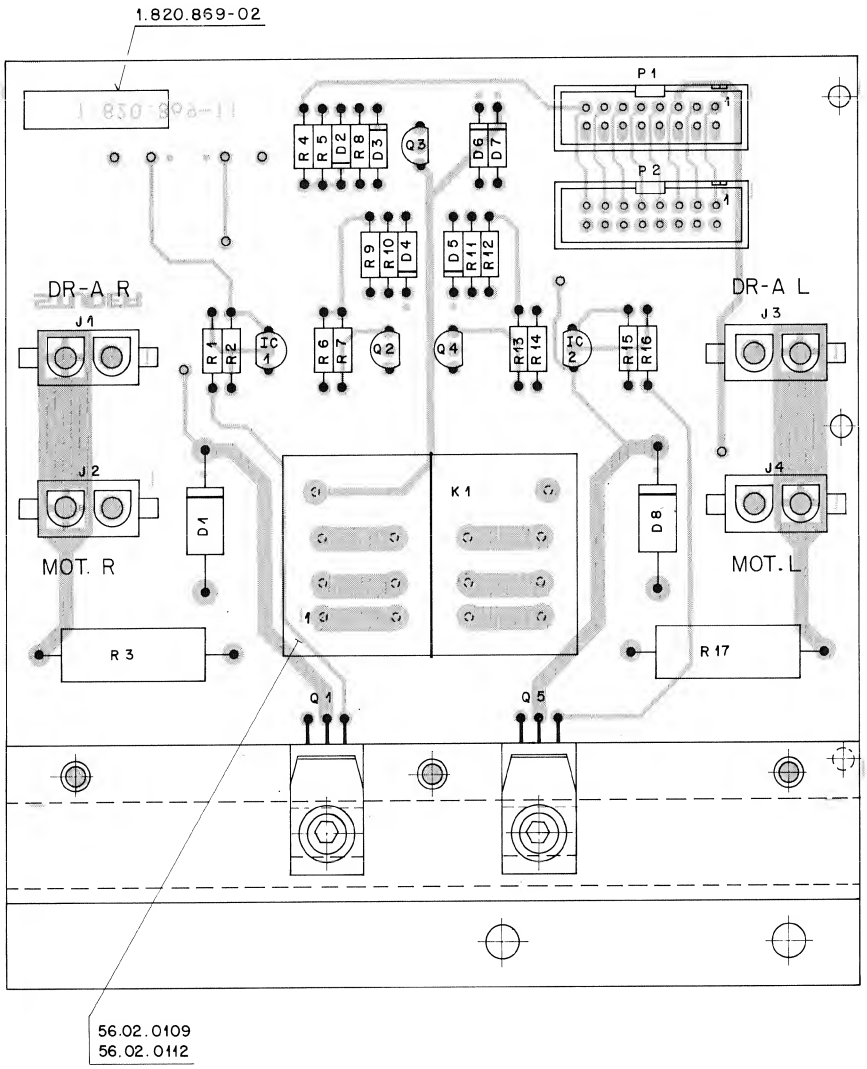

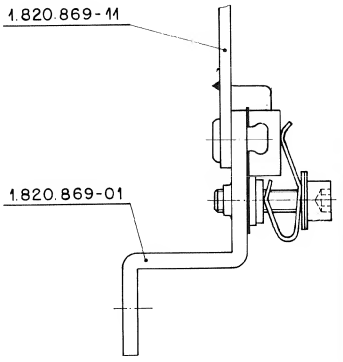

IND.	POS.NO.	PART NO.	VALUE	SPECIFICATIONS / EQUIVALENT	MANUF.
	D.....1	50.04.0507	1N 5402	1N 5403, MR 502RL	GI,Mot
	D.....2	50.04.1222	18 V Z	5%, 1.3 W	ITT,Mot,Ph,Tho,Tf
	D.....3	50.04.1511	6.2 V Z	BZX 85-C6V2	ITT,Mot,Ph,Tf,SGS,Tho
	D.....4	50.04.1114	10 V Z	BZX 55-C10	ITT,Mot,Ph,Tho,Tf
	D.....5	50.04.1114	10 V Z	BZX 55-C10	ITT,Mot,Ph,Tho,Tf
	D.....6	50.04.0125	1N 4448		Fc,ITT,Ph,Sem,Tf
	D.....7	50.04.1119	15 V Z	BZX 55-C15	ITT,Mot,Ph,Tho,Tf
	D.....8	50.04.0507	1N 5402	1N 5403, MR 502RL	GI,Mot
	IC....1	50.10.0108	LM 317 LZ		Mot,Nat
	IC....2	50.10.0108	LM 317 LZ		Mot,Nat
	J.....1	54.25.0002		see note 1	
	J.....2	54.25.0002		see note 1	
	J.....3	54.25.0002		see note 1	
	J.....4	54.25.0002		see note 1	
	K.....1	56.02.0108	24 V DC	Ly 4	Omron
	P.....1	54.14.2002		see note 2	
	P.....2	54.14.2002		see note 2	
	Q.....1	50.03.0512	BD 899 A	BDW 93 B	Mot,SGS
	Q.....2	50.03.0340	BC 337-25		ITT,NS,Ph,Sie
	Q.....3	50.03.0340	BC 337-25		ITT,NS,Ph,Sie
	Q.....4	50.03.0340	BC 337-25		ITT,NS,Ph,Sie
	Q.....5	50.03.0512	BD 899 A	BDW 93 B	Mot,SGS
	R.....1	57.11.3680	68 Ohm	5%	
	R.....2	57.11.3331	330 Ohm	5%	
	R.....3	57.56.5478	0.47 Ohm	10%, 4 Watt	
	R.....4	57.11.3681	680 Ohm	5%	
	R.....5	57.11.3391	390 Ohm	5%	
	R.....6	57.11.3471	470 Ohm	5%	
	R.....7	57.11.3271	270 Ohm	5%	
	R.....8	57.11.3682	6.8 kOhm	5%	
	R.....9	57.11.3562	5.6 kOhm	5%	

S T U D E R (00) 90/06/07 VF POWER FAIL SENSE BOARD PL 1.820.869.81 PAGE 1

IND.	POS.NO.	PART NO.	VALUE	SPECIFICATIONS / EQUIVALENT	MANUF.
	R....10	57.11.3103	10 kOhm	5%	
	R....11	57.11.3103	10 kOhm	5%	
	R....12	57.11.3562	5.6 kOhm	5%	
	R....13	57.11.3271	270 Ohm	5%	
	R....14	57.11.3471	470 Ohm	5%	
	R....15	57.11.3331	330 Ohm	5%	
	R....16	57.11.3680	68 Ohm	5%	
	R....17	57.56.5478	0.47 Ohm	10%, 4 Watt	

Note 1 - Connector, 2 contacts: AMP Nr. 826846-3

Note 2 - Connector,26 contacts: Yamaichi Nr. FAP-16-08-4055
Burndy Nr. BPH 9 B16 B00 G5
3M Nr. 7616-6002 VZ

MANUFACTURER: Fc=Fairchild, GI=General Instruments, ITT=Intermetal,
Mot=Motorola, Nat=National, NS=National Semiconductors,
Ph=Philips, Sem=Semcosem, SGS=SGS\Ates, Sie=Siemens,
Tf=Telefunken, Tho=Thomson

ORIG 90/06/07

S T U D E R (00) 90/06/07 VF POWER FAIL SENSE BOARD PL 1.820.869.81 PAGE 2

BLOCKDIAGRAM STABILIZER AUX, VOLTAGES 1.820.872.82

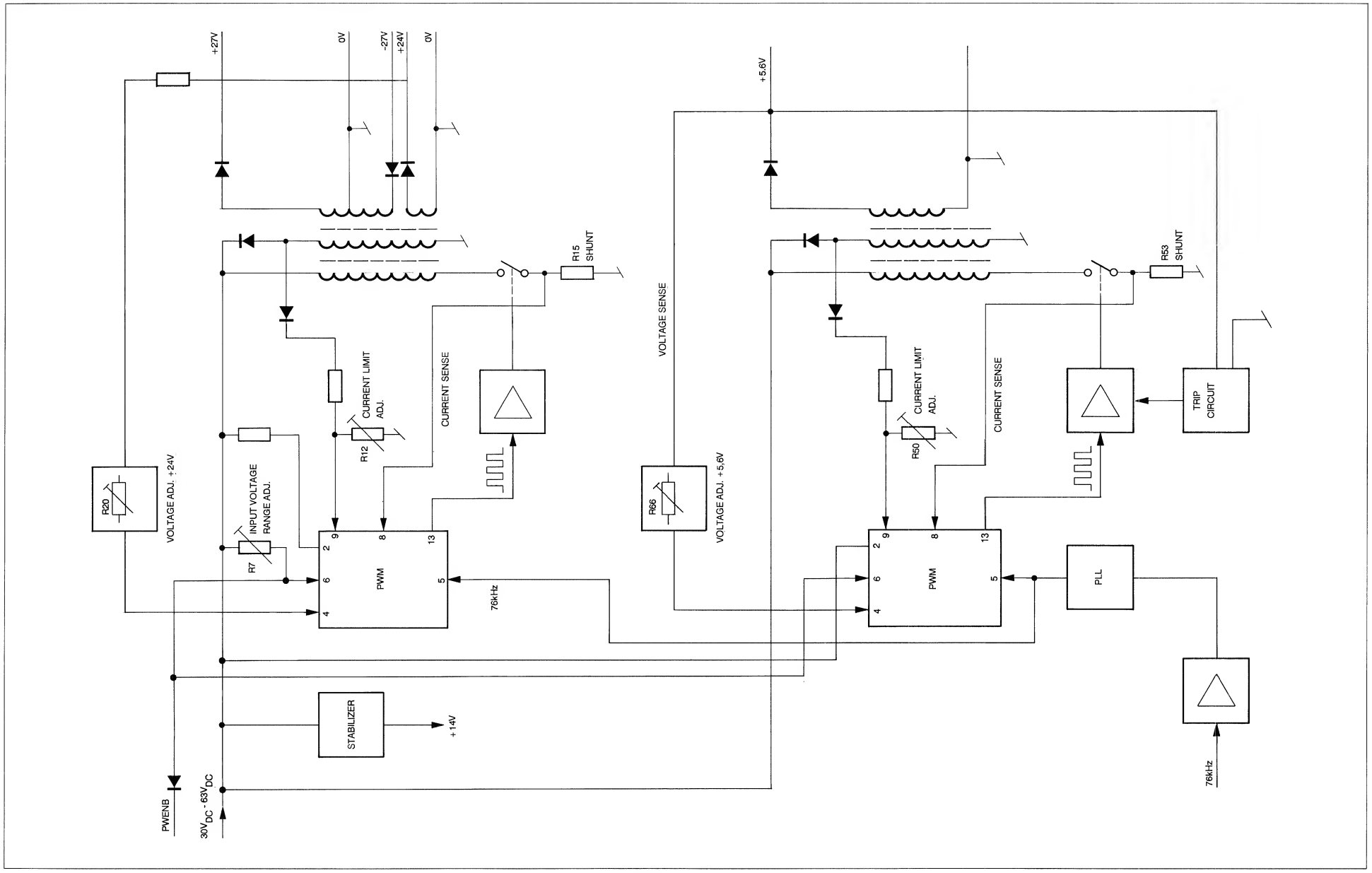

STABILIZER AUX, VOLTAGES 1.820.872.82

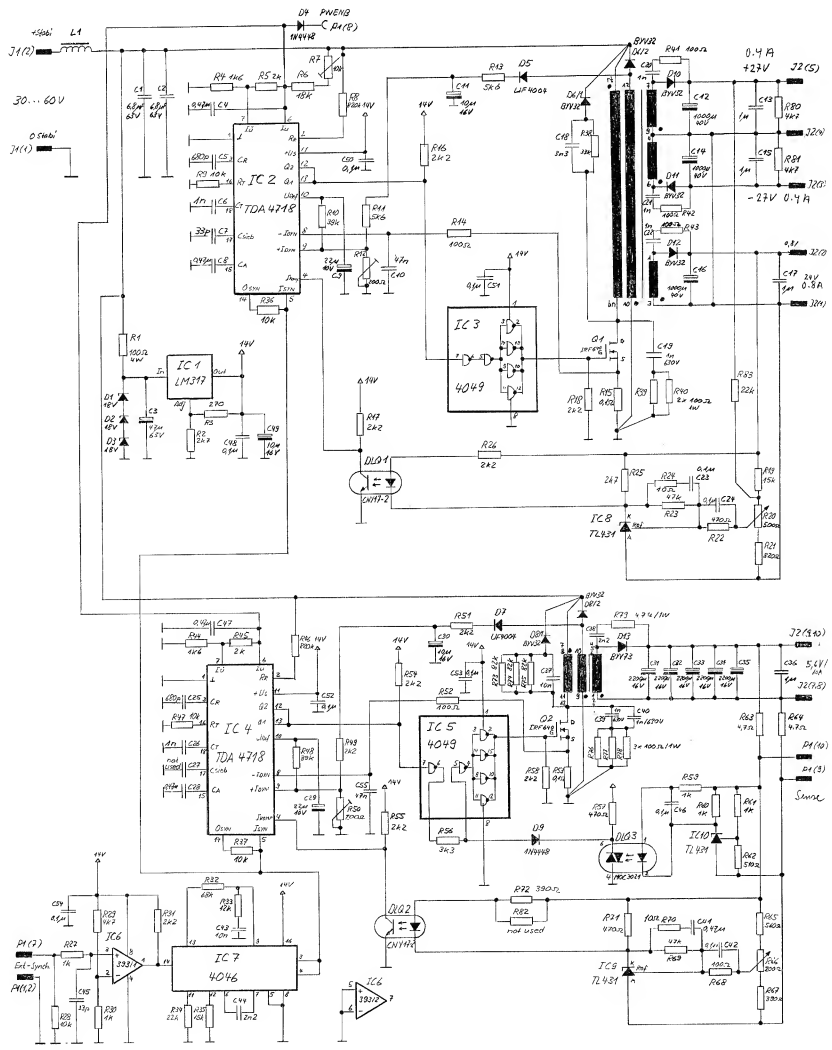

0 10.02.88 Th. Lauenhalt	. .	. .	. .	. .
				PAGE 1 OF 1
STUDER	STABILIZER AUX, VOLTAGES			1.820.872.82

STABILIZER AUX, VOLTAGES 1.820.872.82

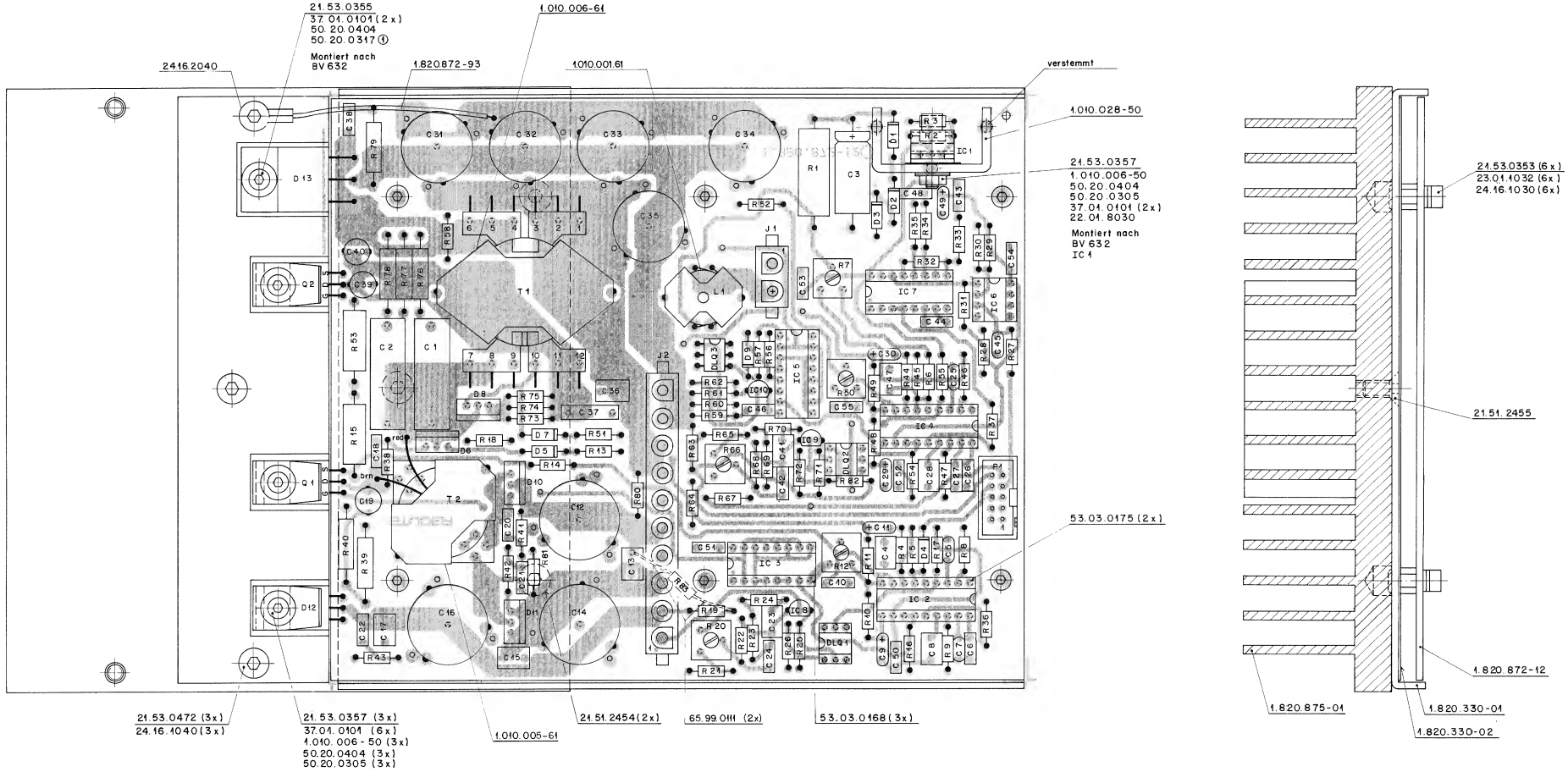

STABILIZER AUX, VOLTAGES 1.820.872.82

IND.	POS.NO.	PART NO.	VALUE	SPECIFICATIONS / EQUIVALENT	MANUF.
	C.....1	59.31.5685	6.8 uF	10%, 63V, MPETP	
	C.....2	59.31.5685	6.8 uF	10%, 63V, MPETP	
	C.....3	59.25.6470	47 uF	20%, 63V, El	
	C.....4	59.06.0474	470 nF	10%, 63V, PETP	
	C.....5	59.32.2681	680 pF	10%, 50V, KER	
	C.....6	59.06.0102	1 nF	10%, 63V, PETP	
	C.....7	59.32.1330	33 pF	10%, 400V, KER	
	C.....8	59.06.0474	470 nF	10%, 50V, PETP	
	C.....9	59.26.1220	22 uF	20%, 10V, Sal	
	C....10	59.06.0473	47 nF	10%, 63V, PETP	
	C....11	59.26.2100	10 uF	20%, 16V, Sal	
	C....12	59.28.4102	1000 uF	20%, 40V, El	
	C....13	59.06.0105	1 uF	10%, 50V, PETP	
	C....14	59.28.4102	1000 uF	20%, 40V, El	
	C....15	59.06.0105	1 uF	10%, 50V, PETP	
	C....16	59.28.4102	1000 uF	20%, 40V, El	
	C....17	59.06.0105	1 uF	10%, 50V, PETP	
	C....18	59.06.0332	3.3 nF	10%, 63V, PETP	
	C....19	59.05.2102	1 nF	2.5%, 630V, PP	
	C....20	59.06.0102	1 nF	10%, 63V, PETP	
	C....21	59.06.0102	1 nF	10%, 63V, PETP	
	C....22	59.06.0102	1 nF	10%, 63V, PETP	
	C....23	59.06.0104	100 nF	10%, 63V, PETP	
	C....24	59.06.0104	100 nF	10%, 63V, PETP	
	C....25	59.32.2681	680 pF	10%, 50V, KER	
	C....26	59.06.0102	1 nF	10%, 63V, PETP	
	C....27			NOT USED	
	C....28	59.06.0474	470 nF	10%, 63V, PETP	
	C....29	59.26.1220	22 uF	20%, 10V, Sal	
	C....30	59.26.2100	10 uF	20%, 16V, Sal	
	C....31	59.28.2222	2200 uF	20%, 16V, El	
	C....32	59.28.2222	2200 uF	20%, 16V, El	
	C....33	59.28.2222	2200 uF	20%, 16V, El	
	C....34	59.28.2222	2200 uF	20%, 16V, El	
	C....35	59.28.2222	2200 uF	20%, 16V, El	
	C....36	59.06.0105	1 uF	10%, 50V, PETP	
	C....37	59.31.7103	10 nF	10%, 160V, PETP	

IND.	POS.NO.	PART NO.	VALUE	SPECIFICATIONS / EQUIVALENT	MANUF.
	C....38	59.06.0222	2.2 nF	10%, 63V, PETP	
	C....39	59.05.2102	1 nF	2.5%, 630V, PP	
	C....40	59.05.2102	1 nF	2.5%, 630V, PP	
	C....41	59.06.0474	470 nF	10%, 63V, PETP	
	C....42	59.06.0104	100 nF	10%, 63V, PETP	
	C....43	59.06.0103	10 nF	10%, 63V, PETP	
	C....44	59.06.0222	2.2 nF	10%, 63V, PETP	
	C....45	59.32.1330	33 pF	10%, 400V, KER	
	C....46	59.06.0104	100 nF	10%, 63V, PETP	
	C....47	59.06.0474	470 nF	10%, 63V, PETP	
	C....48	59.06.0104	100 nF	10%, 63V, PETP	
	C....49	59.26.2100	10 uF	20%, 16V, Sal	
	C....50	59.06.0104	100 nF	10%, 63V, PETP	
	C....51	59.06.0104	100 nF	10%, 63V, PETP	
	C....52	59.06.0104	100 nF	10%, 63V, PETP	
	C....53	59.06.0104	100 nF	10%, 63V, PETP	
	C....54	59.06.0104	100 nF	10%, 63V, PETP	
	C....55	59.06.0473	47 nF	10%, 63V, PETP	
	D.....1	50.04.1222	18 V Z	BZX 85 C 18	ITT,Mot,Ph,Tf,Tho
	D.....2	50.04.1222	18 V Z	BZX 85 C 18	ITT,Mot,Ph,Tf,Tho
	D.....3	50.04.1222	18 V Z	BZX 85 C 18	ITT,Mot,Ph,Tf,Tho
	D.....4	50.04.0125	1N 4448		Fc,ITT,Ph,See,Tf
	D.....5	50.04.0138	UF 4004		
	D.....6	50.04.0517	BYV 32-200		Mot,Ph
	D.....7	50.04.0138	UF 4004		
	D.....8	50.04.0517	BYV 32-200		Mot,Ph
	D.....9	50.04.0125	1N 4448		Fc,ITT,Ph,See,Tf
	D....10	50.04.0517	BYV 32-200		Mot,Ph
	D....11	50.04.0517	BYV 32-200		Mot,Ph
	D....12	50.04.0517	BYV 32-200		Mot,Ph
	D....13	50.04.0520	MBR 3045PT	BYV 73-4S	Mot,Ph
	DLQ...1	50.04.3200	CNY 17-2		Sie
	DLQ...2	50.04.3200	CNY 17-2		Sie
	DLQ...3	50.04.2139	MOC 3021		Mot

IND.	POS.NO.	PART NO.	VALUE	SPECIFICATIONS / EQUIVALENT	MANUF.
	IC....1	50.10.0104	LM 317 SP	...T, ...KC	Mot,NS,SGS,Tho,TI
	IC....2	50.10.0111	TDA 4718 A	Q 67000 - Y639	Sie
	IC....3	50.07.0049	HEF4049BP	TC 4049 BP	Ph,To
	IC....4	50.10.0111	TDA 4718 A	Q 67000 - Y639	Sie
	IC....5	50.07.0049	HEF4049BF	TC 4049 BP	Ph,To
	IC....6	50.05.0283	LM 393 ..		NS,Tho,TI
	IC....7	50.07.0046	MC14046BPC	... 4046 ..	Mot,Ph,RCA
	IC....8	50.10.0106	TL 431 CLP		Mot,TI
	IC....9	50.10.0106	TL 431 CLP		Mot,TI
	IC...10	50.10.0106	TL 431 CLP		Mot,TI
	J.....1	54.25.0002	2 cont.	AMP nr. 826846-3	
	J.....2	54.25.0010	10 cont.	AMP nr. 826852-3	
(00)	L.....1	1.022.295.00		filter coil	St
(01)	L.....1	1.022.295.81		filter coil	St
	P.....1	54.14.2001	10 cont.	see note 1	
	Q.....1	50.03.1510	IFR 640		IR,SIX
	Q.....2	50.03.1510	IFR 640		IR,Six
	R.....1	57.56.5101	100 Ohm	10%, 4 W	
	R.....2	57.11.3272	2.7 kOhm	2%	
	R.....3	57.11.3271	270 Ohm	2%	
	R.....4	57.11.3162	1.6 kOhm	1%	
	R.....5	57.11.3202	2 kOhm	1%	
	R.....6	57.11.3183	18 kOhm	2%	
	R.....7	58.01.8103	10 kOhm	see note 4	
	R.....8	57.11.3824	820 kOhm	2%	
	R.....9	57.11.3103	10 kOhm	2%	
	R....10	57.11.3393	39 kOhm	1%	
	R....11	57.11.3562	5.6 kOhm	2%	
	R....12	58.01.8201	200 Ohm	see note 2	
	R....13	57.11.3562	5.6 kOhm	2%	
	R....14	57.11.3101	100 Ohm	2%	
	R....15	57.56.2050	50 mOhm	5%, 3 W, Low Inductance	

IND.	POS.NO.	PART NO.	VALUE	SPECIFICATIONS / EQUIVALENT	MANUF.
	R....16	57.11.3222	2.2 kOhm	2%	
	R....17	57.11.3222	2.2 kOhm	2%	
	R....18	57.11.3222	2.2 kOhm	2%	
	R....19	57.11.3153	15 kOhm	2%	
	R....20	58.01.8501	500 Ohm	see note 2	
	R....21	57.11.3821	820 Ohm	2%	
	R....22	57.11.3471	470 Ohm	2%	
	R....23	57.11.3473	47 kOhm	2%	
	R....24	57.11.3101	100 Ohm	2%	
	R....25	57.11.3272	2.7 KOhm	2%	
	R....26	57.11.3222	2.2 kOhm	2%	
	R....27	57.11.3102	1 kOhm	2%	
	R....28	57.11.3103	10 kOhm	2%	
	R....29	57.11.3472	4.7 kOhm	2%	
	R....30	57.11.3102	1 kOhm	2%	
	R....31	57.11.3222	2.2 kOhm	2%	
	R....32	57.11.3683	68 kOhm	2%	
	R....33	57.11.3123	12 kOhm	2%	
	R....34	57.11.3223	22 kOhm	2%	
	R....35	57.11.3153	15 kOhm	2%	
	R....36	57.11.3103	10 kOhm	2%	
	R....37	57.11.3103	10 kOhm	2%	
	R....38	57.11.3333	33 kOhm	2%	
	R....39	57.13.4101	100 Ohm	2%	
	R....40	57.13.4101	100 Ohm	2%	
	R....41	57.11.3101	100 Ohm	2%	
	R....42	57.11.3101	100 Ohm	2%	
	R....43	57.11.3101	100 Ohm	2%	
	R....44	57.11.3162	1.6 kOhm	1%	
	R....45	57.11.3202	2 kOhm	1%	
	R....46	57.11.3824	820 kOhm	2%	
	R....47	57.11.3103	10 kOhm	2%	
	R....48	57.11.3393	39 kOhm	2%	
	R....49	57.11.3222	2.2 kOhm	2%	
	R....50	58.01.8201	200 Ohm	see note 2	
	R....51	57.11.3222	2.2 kOhm	2%	
	R....52	57.11.3101	100 Ohm	2%	

IND.	POS.NO.	PART NO.	VALUE	SPECIFICATIONS / EQUIVALENT	MANUF.
	R....53	57.56.2050	50 mOhm	5%, 3 W, Low Inductance	
	R....54	57.11.3222	2.2 kOhm	2%	
	R....55	57.11.3222	2.2 kOhm	2%	
	R....56	57.11.3332	3.3 kOhm	2%	
	R....57	57.11.3823	82 kOhm	2%	
	R....58	57.11.3222	2.2 kOhm	2%	
	R....59	57.11.3102	1 kOhm	2%	
	R....60	57.11.3102	1 kOhm	2%	
	R....61	57.11.3102	1 kOhm	2%	
	R....62	57.11.3511	510 Ohm	2%	
	R....63	57.11.3479	4.7 Ohm	2%	
	R....64	57.11.3479	4.7 Ohm	2%	
	R....65	57.11.3561	560 Ohm	2%	
	R....66	58.01.8201	200 Ohm	see note 2	
	R....67	57.11.3391	390 Ohm	2%	
	R....68	57.11.3101	100 Ohm	2%	
	R....69	57.11.3473	47 kOhm	2%	
	R....70	57.11.3100	10 Ohm	2%	
	R....71	57.11.3471	470 Ohm	2%	
	R....72	57.11.3391	390 Ohm	2%	
	R....73	57.11.3823	82 kOhm	2%	
	R....74	57.11.3823	82 kOhm	2%	
	R....75	57.11.3823	82 kOhm	2%	
	R....76	57.13.4101	100 Ohm	2%	
	R....77	57.13.4101	100 Ohm	2%	
	R....78	57.13.4101	100 Ohm	2%	
	R....79	57.13.4479	4.7 Ohm	2%	
	R....80	57.11.3472	4.7 kOhm	2%	
	R....81	57.11.3472	4.7 kOhm	2%	
	R....82			not used	
	R....83	57.11.3223	22 kOhm	2%	
	T.....1	1.022.291.00		Switching power transformer, 5.6V	St
	T.....2	1.022.292.00		Switching power transformer, AUX	St

IND.	POS.NO.	PART NO.	VALUE	SPECIFICATIONS / EQUIVALENT	MANUF.

(01) 22.02.88 Extended current range.

Note 1 - Connector, 10 contacts: Yamaichi nr. FAP-10-08-40 SS
Burndy nr. BPH 9 B 10 B 00 GS
3M nr. 7610-6002 VZ

Note 2 - Potentiometer, 200 Ohm: Bourns nr. 3386 F-1-201
A. Bradley nr. E 2 B 201
Spectrol nr. 63 M 201 T 010
Murata nr. POT 3104 F-1-201

Note 3 - Potentiometer, 2 kOhm: Bourns nr. 3386 F-1-202
A. Bradley nr. E 2 B 202
Spectrol nr. 63 M 202 T 010
Murata nr. POT 3104 F-1-202

Note 4 - Potentiometer, 10 kOhm: Bourns nr. 3386 F-1-103
A. Bradley nr. E 2 B 103
Spectrol nr. 63 M 103 T 010
Murata nr. POT 3104 F-1-103

El=Electrolytic, MPETP=Metalized Polyesterfilm, PETP=Polyesterfilm,
PP=Polypropylene, Sal=Solid aluminium

MANUFACTURER: Fc=Fairchild, ITT=Intermetall, IR=International Rectifier,
Mot=Motorola, NS=National Semiconductors, Ph=Philips,
RCA=RCA Corp. of America, See=Seecoeen, SGS=SGS/Ates,
Sie=Siemens, Six=Siliconix, St=Studer, Tf=Telefunken,
Tho=Thomson CSF, TI=Texas Instruments, To=Toshiba,
GI=General Instruments.

ORIG 87/11/30 (01) 88/02/22

STABILIZER AUX, VOLTAGES 1.820.872.83

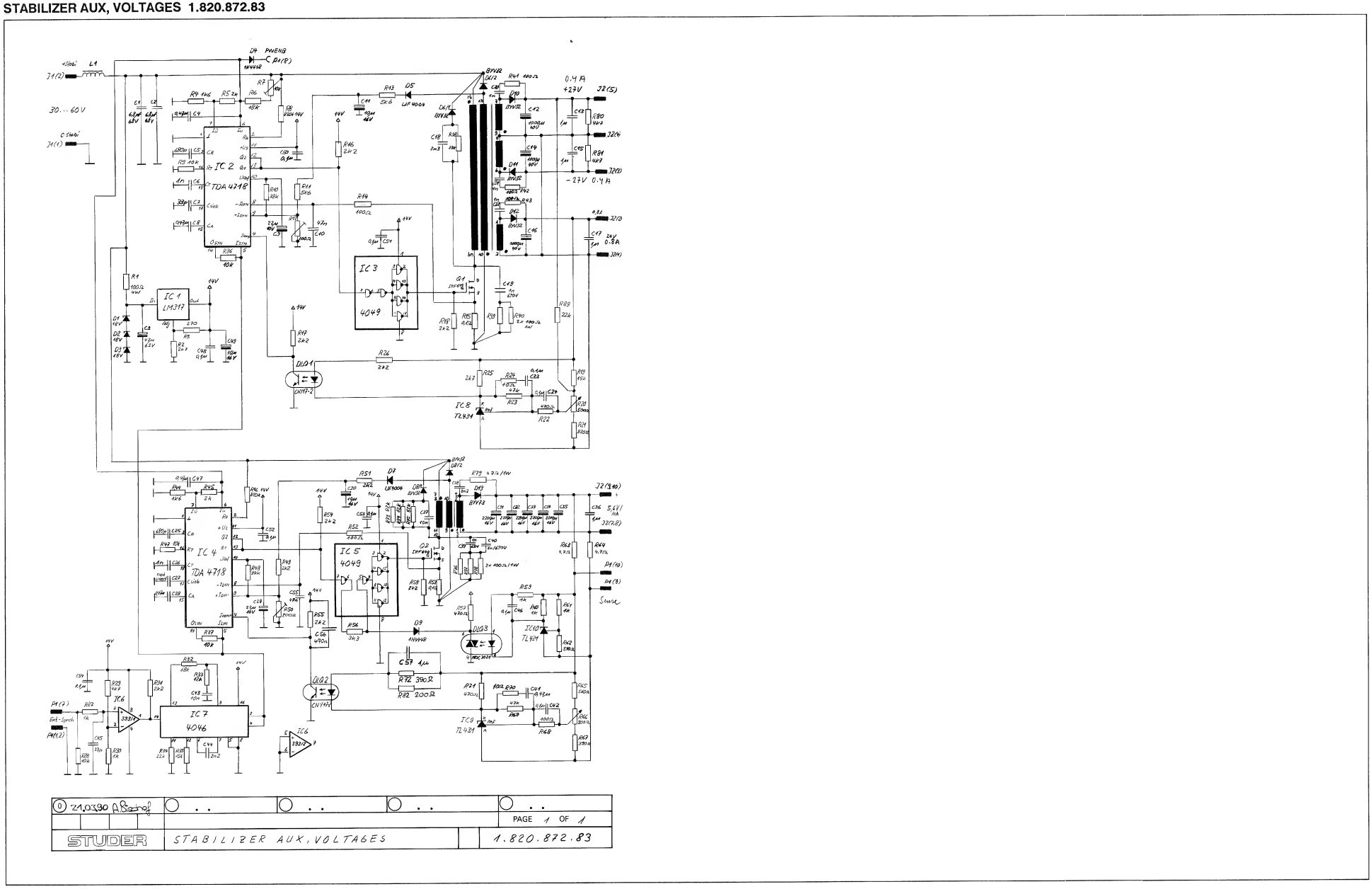

STABILIZER AUX, VOLTAGES 1.820.872.83

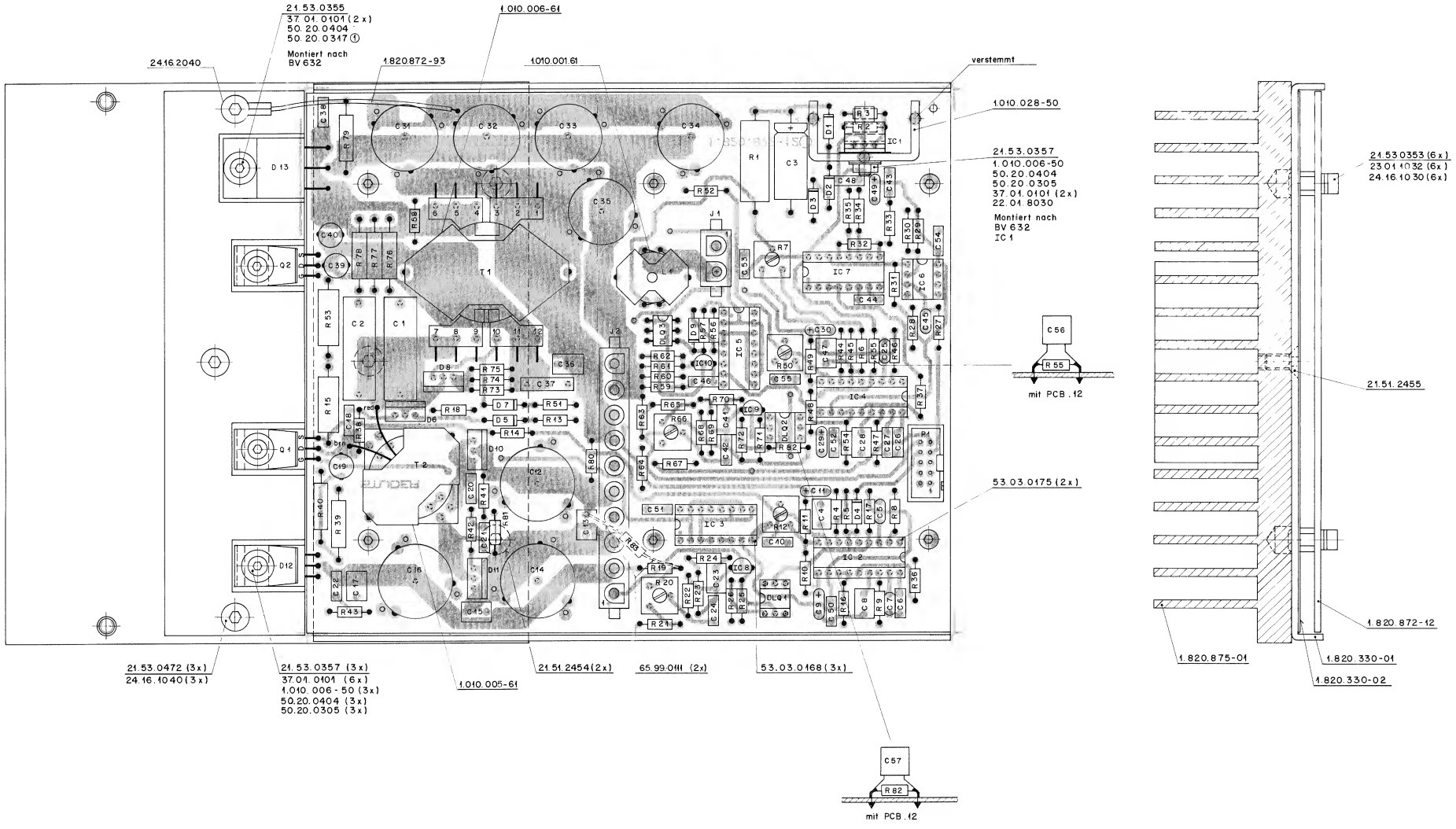

STABILIZER AUX, VOLTAGES 1.820.872.83

IND.	POS.NO.	PART NO.	VALUE	SPECIFICATIONS / EQUIVALENT	MANUF.
	C.....1	59.31.5685	6.8 uF	10%, 63V, MPETP	
	C.....2	59.31.5685	6.8 uF	10%, 63V, MPETP	
	C.....3	59.25.6470	47 uF	20%, 63V, E1	
	C.....4	59.06.0474	470 nF	10%, 63V, PETP	
	C.....5	59.32.2681	680 pF	10%, 50V, KER	
	C.....6	59.06.0102	1 nF	10%, 63V, PETP	
	C.....7	59.32.1330	33 pF	10%, 400V, KER	
	C.....8	59.06.0474	470 nF	10%, 50V, PETP	
	C.....9	59.26.1220	22 uF	20%, 10V, Sal	
	C....10	59.06.0473	47 nF	10%, 63V, PETP	
	C....11	59.26.2100	10 uF	20%, 16V, Sal	
	C....12	59.28.4102	1000 uF	20%, 40V, E1	
	C....13	59.06.0105	1 uF	10%, 50V, PETP	
	C....14	59.28.4102	1000 uF	20%, 40V, E1	
	C....15	59.06.0105	1 uF	10%, 50V, PETP	
	C....16	59.28.4102	1000 uF	20%, 40V, E1	
	C....17	59.06.0105	1 uF	10%, 50V, PETP	
	C....18	59.06.0332	3.3 nF	10%, 63V, PETP	
	C....19	59.05.2102	1 nF	2.5%, 630V, PP	
	C....20	59.06.0102	1 nF	10%, 63V, PETP	
	C....21	59.06.0102	1 nF	10%, 63V, PETP	
	C....22	59.06.0102	1 nF	10%, 63V, PETP	
	C....23	59.06.0104	100 nF	10%, 63V, PETP	
	C....24	59.06.0104	100 nF	10%, 63V, PETP	
	C....25	59.32.2681	680 pF	10%, 50V, KER	
	C....26	59.06.0102	1 nF	10%, 63V, PETP	
	C....27			NOT USED	
	C....28	59.06.0474	470 nF	10%, 63V, PETP	
	C....29	59.26.1220	22 uF	20%, 10V, Sal	
	C....30	59.26.2100	10 uF	20%, 16V, Sal	
	C....31	59.28.2222	2200 uF	20%, 16V, E1	
	C....32	59.28.2222	2200 uF	20%, 16V, E1	
	C....33	59.28.2222	2200 uF	20%, 16V, E1	
	C....34	59.28.2222	2200 uF	20%, 16V, E1	
	C....35	59.28.2222	2200 uF	20%, 16V, E1	
	C....36	59.06.0105	1 uF	10%, 50V, PETP	
	C....37	59.31.7103	10 nF	10%, 160V, PETP	

IND.	POS.NO.	PART NO.	VALUE	SPECIFICATIONS / EQUIVALENT	MANUF.
	C....38	59.06.0222	2.2 nF	10%, 63V, PETP	
	C....39	59.05.2102	1 nF	2.5%, 630V, PP	
	C....40	59.05.2102	1 nF	2.5%, 630V, PP	
	C....41	59.06.0474	470 nF	10%, 63V, PETP	
	C....42	59.06.0104	100 nF	10%, 63V, PETP	
	C....43	59.06.0103	10 nF	10%, 63V, PETP	
	C....44	59.06.0222	2.2 nF	10%, 63V, PETP	
	C....45	59.32.1330	33 pF	10%, 400V, KER	
	C....46	59.06.0104	100 nF	10%, 63V, PETP	
	C....47	59.06.0474	470 nF	10%, 63V, PETP	
	C....48	59.06.0104	100 nF	10%, 63V, PETP	
	C....49	59.26.2100	10 uF	20%, 16V, Sal	
	C....50	59.06.0104	100 nF	10%, 63V, PETP	
	C....51	59.06.0104	100 nF	10%, 63V, PETP	
	C....52	59.06.0104	100 nF	10%, 63V, PETP	
	C....53	59.06.0104	100 nF	10%, 63V, PETP	
	C....54	59.06.0104	100 nF	10%, 63V, PETP	
	C....55	59.06.0473	47 nF	10%, 63V, PETP	
	C....56	59.40.0474	470 nF	10%, 63V, PETP	
	C....57	59.40.0105	1 uF	10%, 63V, PETP	
	D.....1	50.04.1222	18 V Z	BZX 85 C 18	ITT,Mot,Ph,Tf,Tho
	D.....2	50.04.1222	18 V Z	BZX 85 C 18	ITT,Mot,Ph,Tf,Tho
	D.....3	50.04.1222	18 V Z	BZX 85 C 18	ITT,Mot,Ph,Tf,Tho
	D.....4	50.04.0125	1N 4448		Fc,ITT,Ph,Ses,Tf
	D.....5	50.04.0138	UF 4004		
	D.....6	50.04.0517	BYV 32-200		Mot,Ph
	D.....7	50.04.0138	UF 4004		
	D.....8	50.04.0517	BYV 32-200		Mot,Ph
	D.....9	50.04.0125	1N 4448		Fc,ITT,Ph,Ses,Tf
	D....10	50.04.0517	BYV 32-200		Mot,Ph
	D....11	50.04.0517	BYV 32-200		Mot,Ph
	D....12	50.04.0517	BYV 32-200		Mot,Ph
	D....13	50.04.0520	MBR 304SPT	BYV 73-4S	Mot,Ph
	DLQ...1	50.04.3200	CNY 17-2		Sie
	DLQ...2	50.04.3200	CNY 17-2		Sie

IND.	POS.NO.	PART NO.	VALUE	SPECIFICATIONS / EQUIVALENT	MANUF.
	DLQ...3	50.04.2139	MOC 3021		Mot
	IC....1	50.10.0104	LM 317 SP	...T, ...KC	Mot,NS,SGS,Tho,TI
	IC....2	50.10.0111	TDA 4718 A	Q 67000 - Y639	Sie
	IC....3	50.07.0049	HEF4049BP	TC 4049 BP	Ph,To
	IC....4	50.10.0111	TDA 4718 A	Q 67000 - Y639	Sie
	IC....5	50.07.0049	HEF4049BP	TC 4049 BP	Ph,To
	IC....6	50.05.0283	LM 393 ..		NS,Tho,TI
	IC....7	50.07.0046	MC14046BPC	... 4046 ..	Mot,Ph,RCA
	IC....8	50.10.0106	TL 431 CLP		Mot,TI
	IC....9	50.10.0106	TL 431 CLP		Mot,TI
	IC....10	50.10.0106	TL 431 CLP		Mot,TI
	J.....1	54.25.0002	2 cont.	AMP nr. 826846-3	
	J.....2	54.25.0010	10 cont.	AMP nr. 826852-3	
	L.....1	1.022.295.81		filter coil	St
	P.....1	54.14.2101	10 cont.	ses note 1	
	Q.....1	50.03.1510	IFR 640		IR,SIX
	Q.....2	50.03.1510	IFR 640		IR,Six
	R.....1	57.56.5101	100 Ohm	10%, 4 W	
	R.....2	57.11.3272	2.7 kOhm	2%	
	R.....3	57.11.3271	270 Ohm	2%	
	R.....4	57.11.3162	1.6 kOhm	1%	
	R.....5	57.11.3202	2 kOhm	1%	
	R.....6	57.11.3183	18 kOhm	2%	
	R.....7	58.01.8103	10 kOhm	see note 4	
	R.....8	57.11.3824	820 kOhm	2%	
	R.....9	57.11.3103	10 kOhm	2%	
	R....10	57.11.3393	39 kOhm	1%	
	R....11	57.11.3562	5.6 kOhm	2%	
	R....12	58.01.8201	200 Ohm	see note 2	
	R....13	57.11.3562	5.6 kOhm	2%	
	R....14	57.11.3101	100 Ohm	2%	

IND.	POS.NO.	PART NO.	VALUE	SPECIFICATIONS / EQUIVALENT	MANUF.
	R....15	57.56.2050	50 mOhm	5%, 3 W, Low Inductance	
	R....16	57.11.3222	2.2 kOhm	2%	
	R....17	57.11.3222	2.2 kOhm	2%	
	R....18	57.11.3222	2.2 kOhm	2%	
	R....19	57.11.3153	15 kOhm	2%	
	R....20	58.01.8501	500 Ohm	see note 2	
	R....21	57.11.3821	820 Ohm	2%	
	R....22	57.11.3471	470 Ohm	2%	
	R....23	57.11.3473	47 kOhm	2%	
	R....24	57.11.3101	100 Ohm	2%	
	R....25	57.11.3272	2.7 KOhm	2%	
	R....26	57.11.3222	2.2 kOhm	2%	
	R....27	57.11.3102	1 kOhm	2%	
	R....28	57.11.3103	10 kOhm	2%	
	R....29	57.11.3472	4.7 kOhm	2%	
	R....30	57.11.3102	1 kOhm	2%	
	R....31	57.11.3222	2.2 kOhm	2%	
	R....32	57.11.3683	68 kOhm	2%	
	R....33	57.11.3123	12 kOhm	2%	
	R....34	57.11.3223	22 kOhm	2%	
	R....35	57.11.3153	15 kOhm	2%	
	R....36	57.11.3103	10 kOhm	2%	
	R....37	57.11.3103	10 kOhm	2%	
	R....38	57.11.3333	33 kOhm	2%	
	R....39	57.13.4101	100 Ohm	2%	
	R....40	57.13.4101	100 Ohm	2%	
	R....41	57.11.3101	100 Ohm	2%	
	R....42	57.11.3101	100 Ohm	2%	
	R....43	57.11.3101	100 Ohm	2%	
	R....44	57.11.3162	1.6 kOhm	1%	
	R....45	57.11.3202	2 kOhm	1%	
	R....46	57.11.3824	820 kOhm	2%	
	R....47	57.11.3103	10 kOhm	2%	
	R....48	57.11.3393	39 kOhm	2%	
	R....49	57.11.3222	2.2 kOhm	2%	
	R....50	58.01.8201	200 Ohm	see note 2	
	R....51	57.11.3222	2.2 kOhm	2%	

IND.	POS.NO.	PART NO.	VALUE	SPECIFICATIONS / EQUIVALENT	MANUF.
	R....52	57.11.3101	100 Ohm	2%	
	R....53	57.56.2050	50 mOhm	5%, 3 W, Low Inductance	
	R....54	57.11.3222	2.2 kOhm	2%	
	R....55	57.11.3222	2.2 kOhm	2%	
	R....56	57.11.3332	3.3 kOhm	2%	
	R....57	57.11.3823	82 kOhm	2%	
	R....58	57.11.3222	2.2 kOhm	2%	
	R....59	57.11.3102	1 kOhm	2%	
	R....60	57.11.3102	1 kOhm	2%	
	R....61	57.11.3102	1 kOhm	2%	
	R....62	57.11.3511	510 Ohm	2%	
	R....63	57.11.3479	4.7 Ohm	2%	
	R....64	57.11.3479	4.7 Ohm	2%	
	R....65	57.11.3561	560 Ohm	2%	
	R....66	58.01.8201	200 Ohm	see note 2	
	R....67	57.11.3391	390 Ohm	2%	
	R....68	57.11.3101	100 Ohm	2%	
	R....69	57.11.3473	47 kOhm	2%	
	R....70	57.11.3100	10 Ohm	2%	
	R....71	57.11.3471	470 Ohm	2%	
	R....72	57.11.3391	390 Ohm	2%	
	R....73	57.11.3823	82 kOhm	2%	
	R....74	57.11.3823	82 kOhm	2%	
	R....75	57.11.3823	82 kOhm	2%	
	R....76	57.13.4101	100 Ohm	2%	
	R....77	57.13.4101	100 Ohm	2%	
	R....78	57.13.4101	100 Ohm	2%	
	R....79	57.13.4479	4.7 Ohm	2%	
	R....80	57.11.3472	4.7 kOhm	2%	
	R....81	57.11.3472	4.7 kOhm	2%	
	R....82	57.11.3201	200 Ohm	2%	
	R....83	57.11.3223	22 kOhm	2%	
	T.....1	1.022.291.00		Switching power transformer, 5.6V	St
	T.....2	1.022.292.00		Switching power transformer, AUX	St

IND.	POS.NO.	PART NO.	VALUE	SPECIFICATIONS / EQUIVALENT	MANUF.

Notes 1 - Connector, 10 contacts with Interlock: Siemens nr. V 23535 - A2700 - A102; Thomas+ Betts 501 - 1027 - ES

Note 2 - Potentiometer, 200 Ohm: Bourns nr. 3386 F-1-201; A. Bradley nr. E 2 B 201; Spectrol nr. 63 M 201 T 010; Murata nr. POT 3104 F-1-201

Note 3 - Potentiometer, 2 kOhm: Bourns nr. 3386 F-1-202; A. Bradley nr. E 2 B 202; Spectrol nr. 63 M 202 T 010; Murata nr. POT 3104 F-1-202

Note 4 - Potentiometer, 10 kOhm: Bourns nr. 3386 F-1-103; A. Bradley nr. E 2 B 103; Spectrol nr. 63 M 103 T 010; Murata nr. POT 3104 F-1-103

E1=Electrolytic, MPETP=Metalized Polyesterfilm, PETP=Polyesterfilm, PP=Polypropylene, Sal=Solid aluminium

MANUFACTURER: Fc=Fairchild, ITT=Intermetall, IR=International Rectifier, Mot=Motorola, NS=National Semiconductors, Ph=Philips, RCA=RCA Corp. of America, Ses=Sescosem, SGS=SGS/Ates, Sie=Siemens, Six=Siliconix, St=Studer, Tf=Telefunken, Tho=Thomson CSF, TI=Texas Instruments, To=Toshiba, GI=General Instruments.

ORIG 90/02/12

BLOCKDIAGRAM STABILIZER +15V; -15V; +24V 1.820.873.82

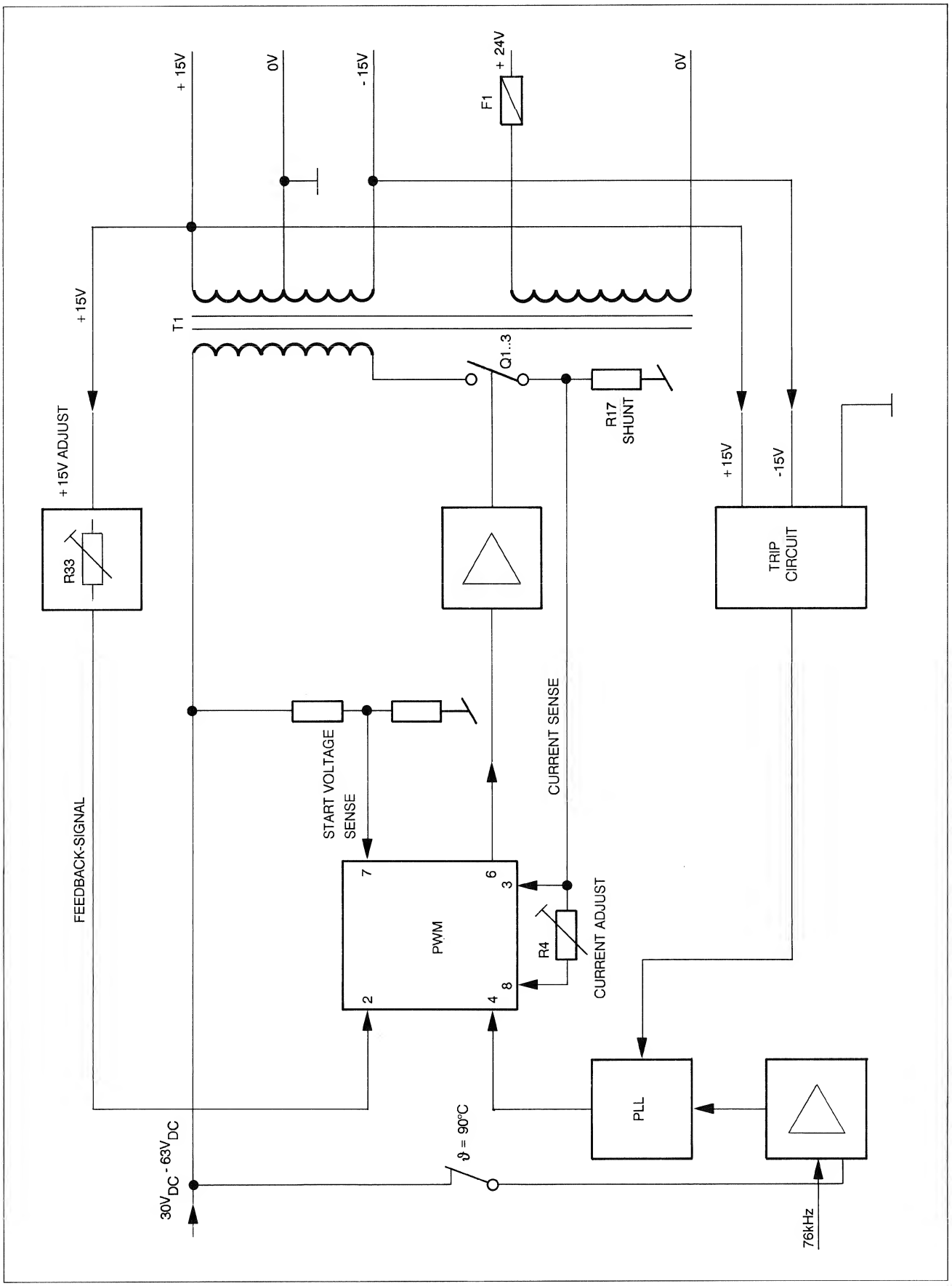

STABILIZER +/-15V 1.820.873.82

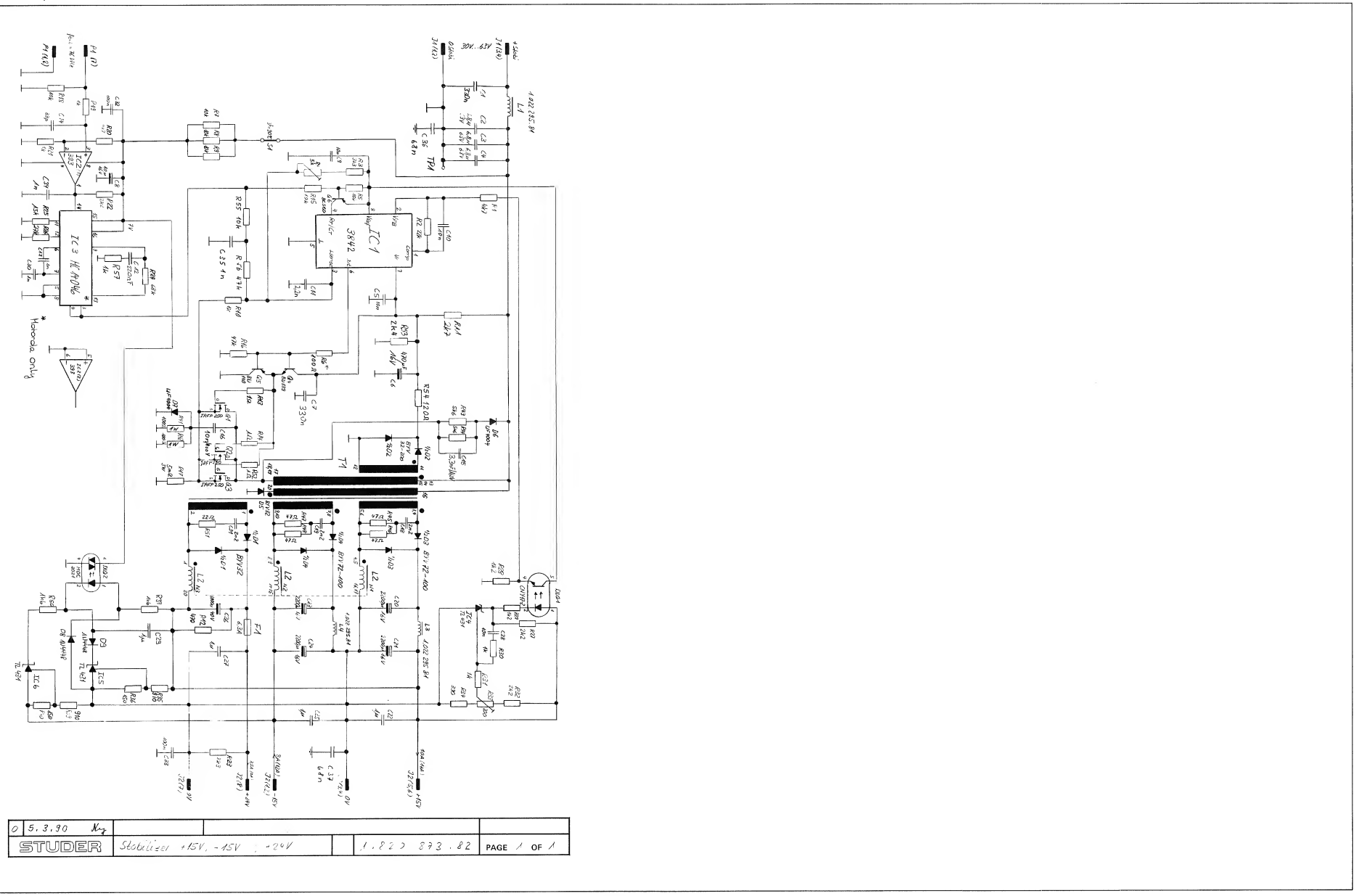

STABILIZER +/-15V 1.820.873.82

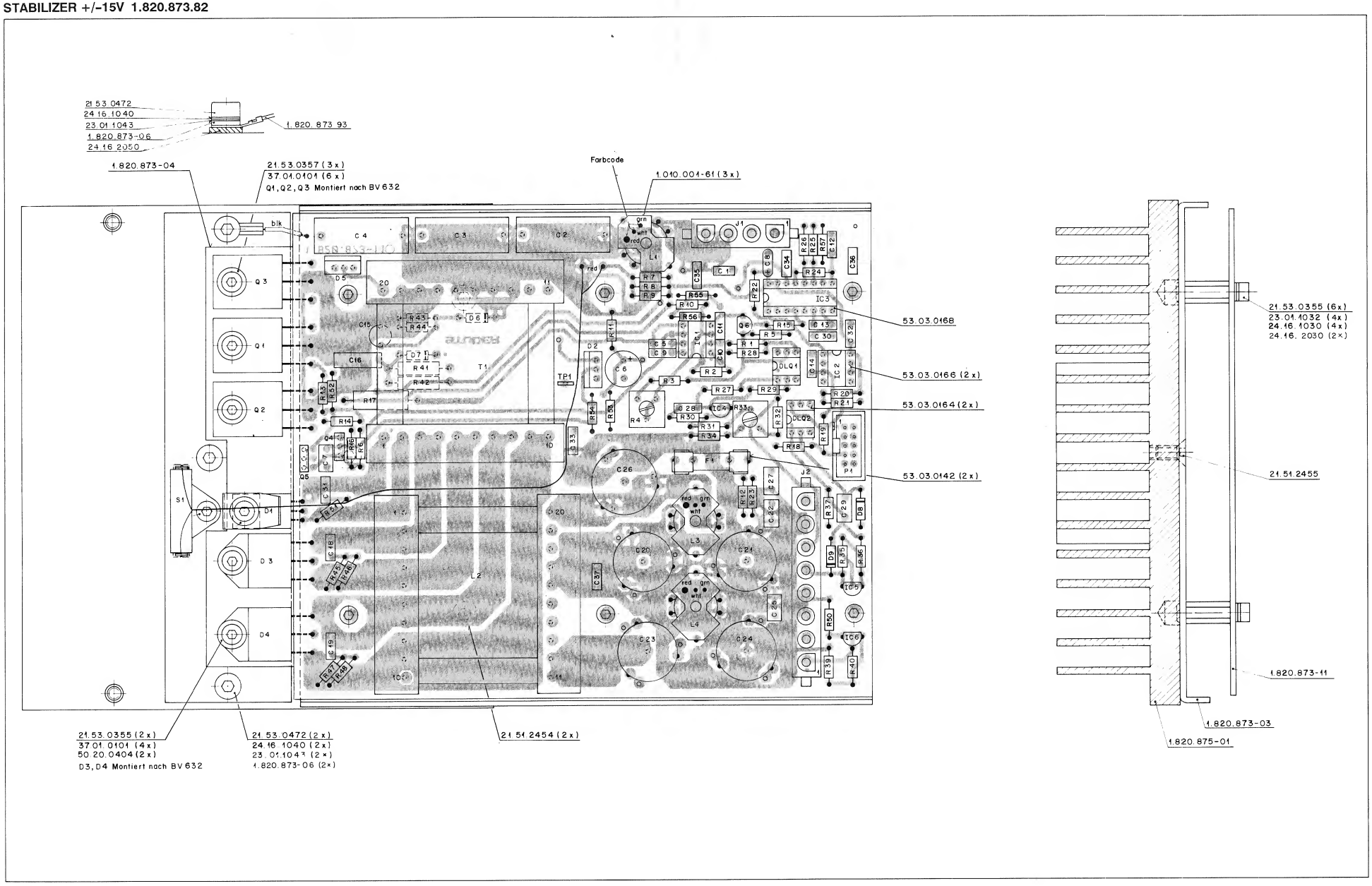

STABILIZER +/-15V 1.820.873.82

IND.	POS.NO.	PART NO.	VALUE	SPECIFICATIONS / EQUIVALENT	MANUF.
	C.....1	59.06.0334	330 nF	10%, 63V, PETP	
	C.....2	59.31.5685	6.8 uF	10%, 63V, MPETP	
	C.....3	59.31.5685	6.8 uF	10%, 63V, MPETP	
	C.....4	59.31.5685	6.8 uF	10%, 63V, MPETP	
	C.....5	59.06.0103	10 nF	10%, 63V, PETP	
	C.....6	59.22.4471	470 uF	20%, 16V, EL	
	C.....7	59.06.0334	330 nF	10%, 63V, PETP	
	C.....8	59.26.2100	10 uF	20%, 16V, Sal	
	C.....9	59.06.0103	10 nF	10%, 63V, PETP	
	C....10	59.06.0103	10 nF	10%, 63V, PETP	
	C....11	59.06.0222	2.2 nF	10%, 63V, PETP	
	C....12	59.06.0224	220 nF	10%, 63V, PETP	
	C....13	59.06.0102	1 nF	10%, 63V, PETP	
	C....14	59.34.2330	33 pF	5%, N150, CER	
	C....15	59.05.2332	3.3 nF	2.5%, 160V, PP	
	C....16	59.05.6103	10 nF	10%, 400V, MPP	
	C....17		not used		
	C....18	59.06.0222	2.2 nF	10%, 63V, PETP	
	C....19	59.06.0222	2.2 nF	10%, 63V, PETP	
	C....20	59.28.2222	2200 uF	10%, 63V, PETP	
	C....21	59.28.2222	2200 uF	10%, 16V, PETP	
	C....22	59.06.0105	1 uF	10%, 50V, PETP	
	C....23	59.28.2222	2200 uF	20%, 16V, El	
	C....24	59.28.2222	2200 uF	20%, 16V, El	
	C....25	59.06.0105	1 uF	10%, 50V, PETP	
	C....26	59.28.4102	1000 uF	20%, 40V, El	
	C....27	59.06.0105	1 uF	10%, 50V, PETP	
	C....28	59.06.0103	10 nF	10%, 63V, PETP	
	C....29	59.06.0105	1 uF	10%, 50V, PETP	
	C....30	59.06.0102	1 nF	10%, 63V, PETP	
	C....31	59.06.0222	2.2 nF	10%, 63V, PETP	
	C....32	59.06.0104	100 nF	10%, 63V, PETP	
	C....33	59.06.0104	100 nF	10%, 63V, PETP	
	C....34	59.32.4102	1 nF	20%, 50V, Cer	
	C....35	59.06.0102	1 nF	10%, 63V, PETP	
	C....36	59.99.0246	68 nF	-20%, 63V, Cer	
	C....37	59.99.0246	68 nF	-20%, 63V, Cer	

S T U D E R (00) 90/03/05 AST STABILIZER +15V, -15V, PL 1.820.873.82 PAGE 1

IND.	POS.NO.	PART NO.	VALUE	SPECIFICATIONS / EQUIVALENT	MANUF.
	D.....1	50.04.0517	BYV 32-200		Ph, Mot
	D.....2	50.04.0517	BYV 32-200		Ph, Mot
	D.....3	50.04.0522	BYV72-100	BYW99P-100	Tho, Ph, Mot
	D.....4	50.04.0522	BYV72-100	BYW99P-100	Tho, Ph, Mot
	D.....5	50.04.0517	BYV 32-200		Ph, Mot
	D.....6	50.04.0138	UF 4004	BYN 01-400	
	D.....7	50.04.0138	UF 4004	BYN 01-400	
	D.....8	50.04.0125	1 N 4448		Fc,ITT,Ph,SES,Tf
	D.....9	50.04.0125	1 N 4448		Fc,ITT,Ph,SES,Tf
	DLQ...1	50.04.3200	CNY17-2		Sie
	DLQ...2	50.04.2139	MOC 3021		Mot
	F.....1	51.01.0125	Fuse 6.3A		
	IC....1	50.10.0114	IP 3842N		Un,SGS
	IC....2	50.05.0283	LM 393		
	IC....3	50.07.1046	MC 14046BE		Mot Only
	IC....4	50.10.0106	TL 431 CL	P	Mot,TI
	IC....5	50.10.0106	TL 431 CL	P	Mot,TI
	IC....6	50.10.0106	TL 431 CL	P	Mot,TI
	J.....1	54.25.0004	4 cont.	AMP nr. 826848-3 or 826848-1	
	J.....2	54.25.0008	8 cont.	AMP nr. 826851-3	
	L.....1	1.022.295.81		Filter coil	St
	L.....2	1.022.606.00		CHOKE +15V/-15V	St
	L.....3	1.022.295.81		Filter coil	St
	L.....4	1.022.295.81		Filter coil	St
	L.....5		not used		
	P.....1	54.14.2001	10 cont.	see note 1	
	Q.....1	50.03.1612	IRF P250		IR
	Q.....2	50.03.1612	IRF P250		IR
	Q.....3	50.03.1612	IRF P250		IR
	Q.....4	50.03.0451	BD 139		any

S T U D E R (00) 90/03/05 AST STABILIZER +15V, -15V, PL 1.820.873.82 PAGE 2

IND.	POS.NO.	PART NO.	VALUE	SPECIFICATIONS / EQUIVALENT	MANUF.
	Q.....5	50.03.0452	BD 140		any
	Q.....6	50.03.0496	BC 560		any
	R.....1	57.11.3472	4.7 kOhm	1%	
	R.....2	57.11.3223	22 kOhm	1%	
	R.....3	57.11.3332	3.3 kOhm	1%	
	R.....4	58.01.8502	5 kOhm	see note 2	
	R.....5	57.11.3103	10 kOhm	1%	
	R.....6	57.11.3101	100 Ohm	1%	
	R.....7	57.11.3103	10 kOhm	1%	
	R.....8	57.11.3103	10 kOhm	1%	
	R.....9	57.11.3103	10 kOhm	1%	
	R....10	57.11.3102	1 kOhm	1%	
	R....11	57.11.3272	2.7 kOhm	1%	
	R....12	57.11.3471	470 Ohm	1%	
	R....13	57.11.3109	1 Ohm	1%	
	R....14	57.11.3109	1 Ohm	1%	
	R....15	57.11.3103	10 kOhm	1%	
	R....16	57.11.3473	47 kOhm	1%	
	R....17	57.56.2005	5 mOhm	5%, 3 W, Low Inductance	
	R....18	57.11.3103	10 kOhm	1%	
	R....19	57.11.3102	1 kOhm	1%	
	R....20	57.11.3472	4.7 kOhm	1%	
	R....21	57.11.3102	1 kOhm	1%	
	R....22	57.11.3222	2.2 kOhm	1%	
	R....23	57.11.3332	3.3 kOhm	1%	
	R....24	57.11.3683	68 kOhm	1%	
	R....25	57.11.3153	15 kOhm	1%	
	R....26	57.11.3273	27 kOhm	1%	
	R....27	57.11.3222	2.2 kOhm	1%	
	R....28	57.11.3122	1.2 kOhm	1%	
	R....29	57.11.3122	1.2 kOhm	1%	
	R....30	57.11.3102	1 kOhm	1%	
	R....31	57.11.3102	1 kOhm	1%	
	R....32	57.11.3222	2.2 kOhm	1%	
	R....33	58.01.8201	200 Ohm	see not 3	
	R....34	57.11.3391	390 Ohm	1%	

S T U D E R (00) 90/03/05 AST STABILIZER +15V, -15V, PL 1.820.873.82 PAGE 3

IND.	POS.NO.	PART NO.	VALUE	SPECIFICATIONS / EQUIVALENT	MANUF.
	R....35	57.11.3911	910 Ohm	1%	
	R....36	57.11.3151	150 Ohm	1%	
	R....37	57.11.3162	1.6 kOhm	1%	
	R....38		not used		
	R....39	57.11.3911	910 Ohm	1%	
	R....40	57.11.3151	150 Ohm	1%	
	R....41	57.13.4101	100 Ohm	2%	
	R....42	57.13.4101	100 Ohm	2%	
	R....43	57.11.3562	5.6 kOhm	1%	
	R....44	57.11.3562	5.6 kOhm	1%	
	R....45	57.11.3470	47 Ohm	1%	
	R....46	57.11.3470	47 Ohm	1%	
	R....47	57.11.3470	47 Ohm	1%	
	R....48	57.11.3470	47 Ohm	1%	
	R....49		not used		
	R....50	57.11.3162	1.6 kOhm	1%	
	R....51	57.11.3220	22 Ohm	1%	
	R....52	57.11.3109	1 Ohm	1%	
	R....53	57.11.3242	2.4 kOhm	1%	
	R....54	57.11.3121	120 Ohm	1%	
	R....55	57.11.3103	10 kOhm	1%	
	R....56	57.11.3473	47 kOhm	1%	
	R....57	57.11.3102	1 kOhm	1%	
	S.....1	55.19.0005		Thermo switch, Tokin nr. OHD 3 - 90 BU	
	T.....1	1.022.299.00		Switching Power Trasformator 2 * 15 V	St
	TP....1	54.02.0320		Test Point	

S T U D E R (00) 90/03/05 AST STABILIZER +15V, -15V, PL 1.820.873.82 PAGE 4

IND.	POS.NO.	PART NO.	VALUE	SPECIFICATIONS / EQUIVALENT	MANUF.

Note 1 - Connector, 10 contacts: Yamaichi nr. FAP-10-08-40 SS
Burndy nr. BPH 9 B 10 B 00 GS
3M nr. 7610-6002 VZ

Note 2 - Potentiometer, 5 kOhm: Bourne nr. 3386 F-1-502
A. Bradley nr. E 2 B 502
Spectrol nr. 63 M 502 T 010
Murata nr. POT 3104 F-1-502

NOTE 3 - Potentiometer, 200 Ohm: Bourne nr. 3386 F-1-201
A. Bradley nr. E 2 B 201
Spectrol nr. 63 M 201 T 010
Murata nr. POT 3104 F-1-201

El=Electrolytic, MPETP=Metalized Polyesterfilm, PETP=Polyesterfilm,
MPP=Metalized Polypropylene, PP=Polypropylene, Sal=Solid aluminium,
Cer=Ceramic.

MANUFACTURER: Fc=Fairchild, ITT=Intermetall, IR=International Rectifier,
Mot=Motorola, NS=National Semiconductors, Ph=Philips,
RCA=RCA Corp. of America, Sse=Sescosem, SGS=SGS/Ates,
Sie=Siemens, Six=Siliconix, St=Studer, Tf=Telefunken,
Tho=Thomson CSF, TI=Texas Instruments, To=Toshiba,
GI=General Instruments, Un=Unitrode.

ORIG 90/03/05

S T U D E R (00) 90/03/05 AST STABILIZER +15V, -15V, PL 1.820.873.82 PAGE 5

SPOOLING MOTOR DRIVE AMPLIFIER 1.820.875.82

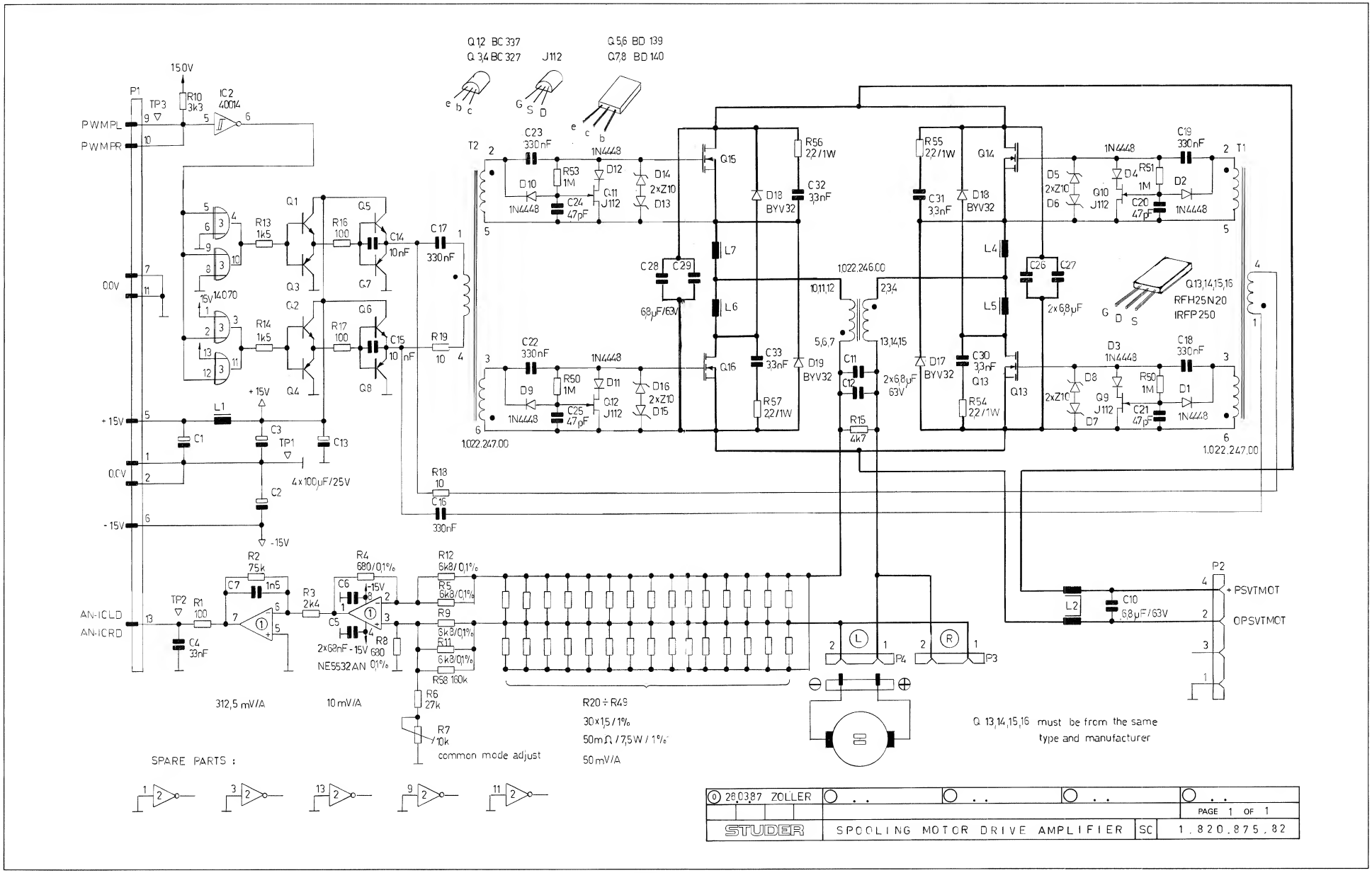

SPOOLING MOTOR DRIVE AMPLIFIER 1.820.875.82

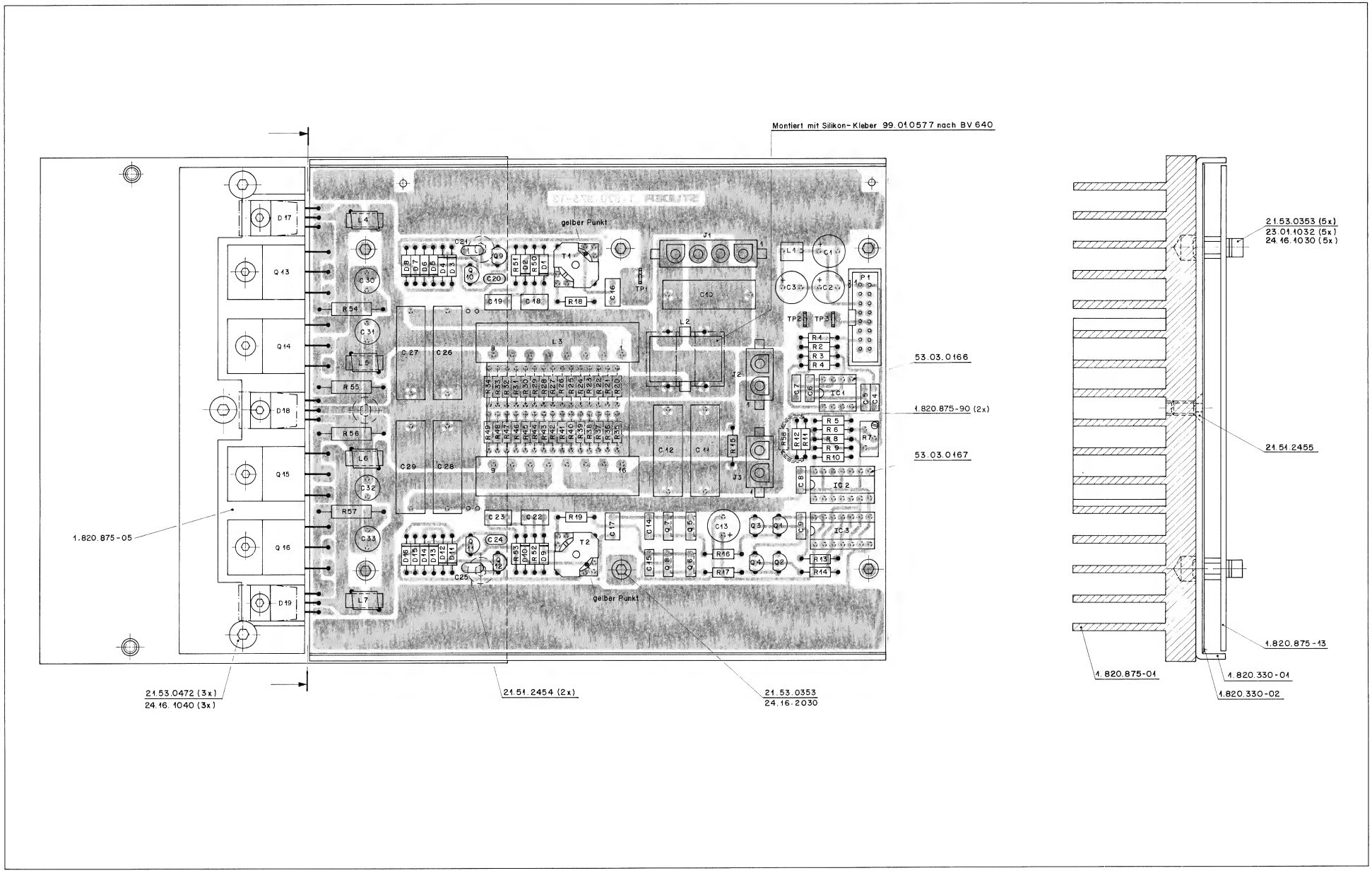

SPOOLING MOTOR DRIVE AMPLIFIER 1.820.875.82

IND.	POS.NO.	PART NO.	VALUE	SPECIFICATIONS / EQUIVALENT	MANUF.
	C.....1	59.22.5101	100 uF	20%, 25V, EL	
	C.....2	59.22.5101	100 uF	20%, 25V, El	
	C.....3	59.22.5101	100 uF	20%, 25V, El	
	C.....4	59.06.0333	33 nF	10%, 63V, PETP	
	C.....5	59.06.0683	68 nF	10%, 63V, PETP	
	C.....6	59.06.0683	68 nF	10%, 63V, PETP	
	C.....7	59.06.0152	1,5 nF	10%, 63V, PETP	
	C.....8	59.06.0683	68 nF	10%, 63V, PETP	
	C.....9	59.06.0683	68 nF	10%, 63V, PETP	
	C....10	59.99.0268	6,8 uF	10%, 63V, PETP	
	C....11	59.99.0268	6,8 uF	10%, 63V, PETP	
	C....12	59.99.0268	6,8 uF	10%, 63V, PETP	
	C....13	59.22.5101	100 uF	20%, 25V, El	
	C....14	59.06.0103	10 nF	10%, 63V, PETP	
	C....15	59.06.0103	10 nF	10%, 63V, PETP	
	C....16	59.06.0334	330 nF	10%, 63V, PETP	
	C....17	59.06.0334	330 nF	10%, 63V, PETP	
	C....18	59.06.0334	330 nF	10%, 63V, PETP	
	C....19	59.06.0334	330 nF	10%, 63V, PETP	
	C....20	59.34.2470	47 pF	5%, N150, CER	
	C....21	59.34.2470	47 pF	5%, N150, CER	
	C....22	59.06.0334	330 nF	10%, 63V, PETP	
	C....23	59.06.0334	330 nF	10%, 63V, PETP	
	C....24	59.34.2470	47 pF	5%, N150, CER	
	C....25	59.34.2470	47 pF	5%, N150, CER	
	C....26	59.99.0268	6,8 uF	10%, 63V, PETP	
	C....27	59.99.0268	6,8 uF	10%, 63V, PETP	
	C....28	59.99.0268	6,8 uF	10%, 63V, PETP	
	C....29	59.99.0268	6,8 uF	10%, 63V, PETP	
	C....30	59.47.2332	3,3 nF	5%, 160V, PP	
	C....31	59.47.2332	3,3 nF	5%, 160V, PP	
	C....32	59.47.2332	3,3 nF	5%, 160V, PP	
	C....33	59.47.2332	3,3 nF	5%, 160V, PP	
	D.....1	50.04.0125	1N 4448		Fc,ITT,Ph,See,Tf
	D.....2	50.04.0125	1N 4448		Fc,ITT,Ph,See,Tf
	D.....3	50.04.0125	1N 4448		Fc,ITT,Ph,See,Tf

IND.	POS.NO.	PART NO.	VALUE	SPECIFICATIONS / EQUIVALENT	MANUF.
	D.....4	50.04.0125	1N 4448		Fc,ITT,Ph,See,Tf
	D.....5	50.04.1216	Z 10V	1,3W	ITT,Mot,Ph,Tf,Tho
	D.....6	50.04.1216	Z 10V	1,3W	ITT,Mot,Ph,Tf,Tho
	D.....7	50.04.1216	Z 10V	1,3W	ITT,Mot,Ph,Tf,Tho
	D.....8	50.04.1216	Z 10V	1,3W	ITT,Mot,Ph,Tf,Tho
	D.....9	50.04.0125	1N 4448		Fc,ITT,Ph,See,Tf
	D....10	50.04.0125	1N 4448		Fc,ITT,Ph,See,Tf
	D....11	50.04.0125	1N 4448		Fc,ITT,Ph,See,Tf
	D....12	50.04.0125	1N 4448		Fc,ITT,Ph,See,Tf
	D....13	50.04.1216	Z 10V	1,3W	ITT,Mot,Ph,Tf,Tho
	D....14	50.04.1216	Z 10V	1,3W	ITT,Mot,Ph,Tf,Tho
	D....15	50.04.1216	Z 10V	1,3W	ITT,Mot,Ph,Tf,Tho
	D....16	50.04.1216	Z 10V	1,3W	ITT,Mot,Ph,Tf,Tho
	D....17	50.04.0517	BYV 32		Mot,Ph
	D....18	50.04.0517	BYV 32		Mot,Ph
	D....19	50.04.0517	BYV 32		Mot,Ph
	IC....1	50.09.0106	NE 5532AN	XR 5532AN	EX,SIG
	IC....2	50.07.0014	MC40106BCP	..14584..	Mot,NS,Ph,RCA,To
	IC....3	50.07.0070	MC14070BCP	HEF4070BP, CD4070BE	Mot,Ph,RCA
	J.....1	54.25.0004	4 POL 16A	see note 1	
	J.....2	54.25.0002	2 POL 16A	see note 2	
	J.....3	54.25.0002	2 POL 16A	see note 2	
	L.....1	62.02.3101	100 uH	Filter coil	TDK
	L.....2	62.99.0112	>1 mH	Filter coil	Tokin
	L.....3	1.022.246.00		Choke coil	St
	L.....4	62.99.0113	1 uH	Filter coil	Vo
	L.....5	62.99.0113	1 uH	Filter coil	Vo
	L.....6	62.99.0113	1 uH	Filter coil	Vo
	L.....7	62.99.0113	1 uH	Filter coil	Vo
	P.....1	54.14.2002	16 cont.	see note 3	
	Q.....1	50.03.0340	BC 337-25		ITT,NS,Ph,Sie
	Q.....2	50.03.0340	BC 337-25		ITT,NS,Ph,Sie

IND.	POS.NO.	PART NO.	VALUE	SPECIFICATIONS / EQUIVALENT	MANUF.
	Q.....3	50.03.0351	BC 327-25		ITT,Ph,Sie
	Q.....4	50.03.0351	BC 327-25		ITT,Ph,Sie
	Q.....5	50.03.0451	BD 139		Mot,Ph,SGS,Tf,To
	Q.....6	50.03.0451	BD 139		Mot,Ph,SGS,Tf,To
	Q.....7	50.03.0452	BD 140		Mot,Ph,SGS,Tf,To
	Q.....8	50.03.0452	BD 140		Mot,Ph,SGS,Tf,To
	Q.....9	50.03.0350	J 112		Mot
	Q....10	50.03.0350	J 112		Mot
	Q....11	50.03.0350	J 112		Mot
	Q....12	50.03.0350	J 112		Mot
(00)	Q....13	50.03.1608	RFH 25N20	see note 4	IR
(01)	Q....13	50.03.1612	IRFP 250	see note 4	IR
(00)	Q....14	50.03.1608	RFH 25N20	see note 4	IR
(01)	Q....14	50.03.1612	IRFP 250	see note 4	IR
(00)	Q....15	50.03.1608	RFH 25N20	see note 4	IR
(01)	Q....15	50.03.1612	IRFP 250	see note 4	IR
(00)	Q....16	50.03.1608	RFH 25N20	see note 4	IR
(01)	Q....16	50.03.1612	IRFP 250	see note 4	IR
	R.....1	57.11.3101	100 Ohm	5%	
	R.....2	57.11.3753	75 kOhm	1%	
	R.....3	57.11.3242	2.4 kOhm	1%	
	R.....4	57.99.0199	680 Ohm	0.1%	
	R.....5	57.99.0250	6.8 kOhm	0.1%	
	R.....6	57.11.3273	27 kOhm	1%	
	R.....7	58.05.1103	10 kOhm	10%	
	R.....8	57.99.0199	680 Ohm	0.1%	
	R.....9	57.99.0250	6.8 kOhm	0.1%	
	R....10	57.11.3332	3.3 kOhm	5%	
	R....11	57.99.0250	6.8 kOhm	0.1%	
	R....12	57.99.0250	6.8 kOhm	0.1%	
	R....13	57.11.3152	1.5 kOhm	5%	
	R....14	57.11.3152	1.5 kOhm	5%	
	R....15	57.11.3472	4.7 kOhm	5%	
	R....16	57.11.3101	100 Ohm	5%	
	R....17	57.11.3101	100 Ohm	5%	
	R....18	57.11.3100	10 Ohm	5%	

IND.	POS.NO.	PART NO.	VALUE	SPECIFICATIONS / EQUIVALENT	MANUF.
	R....19	57.11.3100	10 Ohm	5%	
	R....20	57.11.3159	1.5 Ohm	1%	
	R....21	57.11.3159	1.5 Ohm	1%	
	R....22	57.11.3159	1.5 Ohm	1%	
	R....23	57.11.3159	1.5 Ohm	1%	
	R....24	57.11.3159	1.5 Ohm	1%	
	R....25	57.11.3159	1.5 Ohm	1%	
	R....26	57.11.3159	1.5 Ohm	1%	
	R....27	57.11.3159	1.5 Ohm	1%	
	R....28	57.11.3159	1.5 Ohm	1%	
	R....29	57.11.3159	1.5 Ohm	1%	
	R....30	57.11.3159	1.5 Ohm	1%	
	R....31	57.11.3159	1.5 Ohm	1%	
	R....32	57.11.3159	1.5 Ohm	1%	
	R....33	57.11.3159	1.5 Ohm	1%	
	R....34	57.11.3159	1.5 Ohm	1%	
	R....35	57.11.3159	1.5 Ohm	1%	
	R....36	57.11.3159	1.5 Ohm	1%	
	R....37	57.11.3159	1.5 Ohm	1%	
	R....38	57.11.3159	1.5 Ohm	1%	
	R....39	57.11.3159	1.5 Ohm	1%	
	R....40	57.11.3159	1.5 Ohm	1%	
	R....41	57.11.3159	1.5 Ohm	1%	
	R....42	57.11.3159	1.5 Ohm	1%	
	R....43	57.11.3159	1.5 Ohm	1%	
	R....44	57.11.3159	1.5 Ohm	1%	
	R....45	57.11.3159	1.5 Ohm	1%	
	R....46	57.11.3159	1.5 Ohm	1%	
	R....47	57.11.3159	1.5 Ohm	1%	
	R....48	57.11.3159	1.5 Ohm	1%	
	R....49	57.11.3159	1.5 Ohm	1%	
	R....50	57.11.3105	1.0 MOhm	5%	
	R....51	57.11.3105	1.0 MOhm	5%	
	R....52	57.11.3105	1.0 MOhm	5%	
	R....53	57.11.3105	1.0 MOhm	5%	
	R....54	57.13.4229	2.2 Ohm	5%	
	R....55	57.13.4229	2.2 Ohm	5%	

IND.	POS.NO.	PART NO.	VALUE	SPECIFICATIONS / EQUIVALENT	MANUF.
	R....56	57.13.4229	2.2 Ohm	5%	
	R....57	57.13.4229	2.2 Ohm	5%	
	R....58	57.11.3164	160 kOhm	1%	
	T.....1	1.022.247.00		Impulse transformer	St
	T.....2	1.022.247.00		Impulse transformer	St
	TP....1	54.02.0320		Test point	
	TP....2	54.02.0320		Test point	
	TP....3	54.02.0320		Test point	

(01) 27.02.89 Use of Standard Transistor Type.

Note 1 - Connector 4 contacts:
AMP nr. 826848-3
AMP nr. 826848-1

Note 2 - Connector 2 contacts:
AMP nr. 826846-3

Note 3 - Connector 16 contacts:
Yamaichi nr. FAP-16-08-4055
Burndy nr. BPH 9 B16 B00 GS
3M nr. 7616-6002 VZ

Note 4 - All power transistors must be from the same type and manufacturer.

Manufacturer: Ex=Exar, Fc=Fairchild, IR=International Rectifier, ITT=Intermetal, Mot=Motorola, NS=National Semiconductor, Ph=Philips (incl. Valvo), RCA=Radio Corporation of America, Sea=Seacosem, SGS=SGS/Ates, Sig=Signetics, Sie=Siemens, St=Studer, Tf=Telefunken, Tho=Thomson, To=Toshiba, Vo=Vogt & Co.

ORIG 88/03/28 (01) 89/02/27

BLOCKDIAGRAM STABILIZER 18V/12A PCM-MCH 1.862.600.00

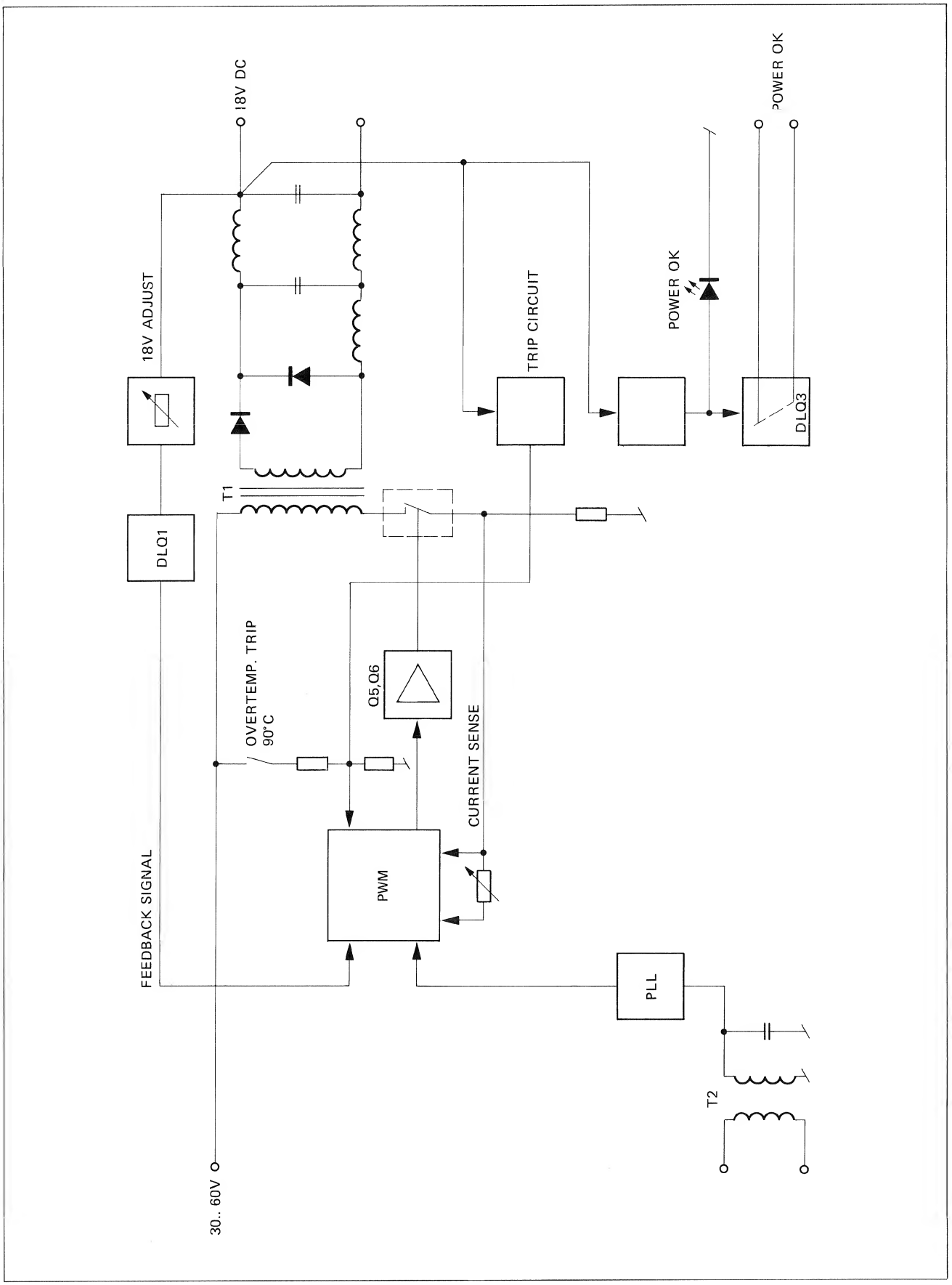

STABILIZER +18V 1.862.600.00

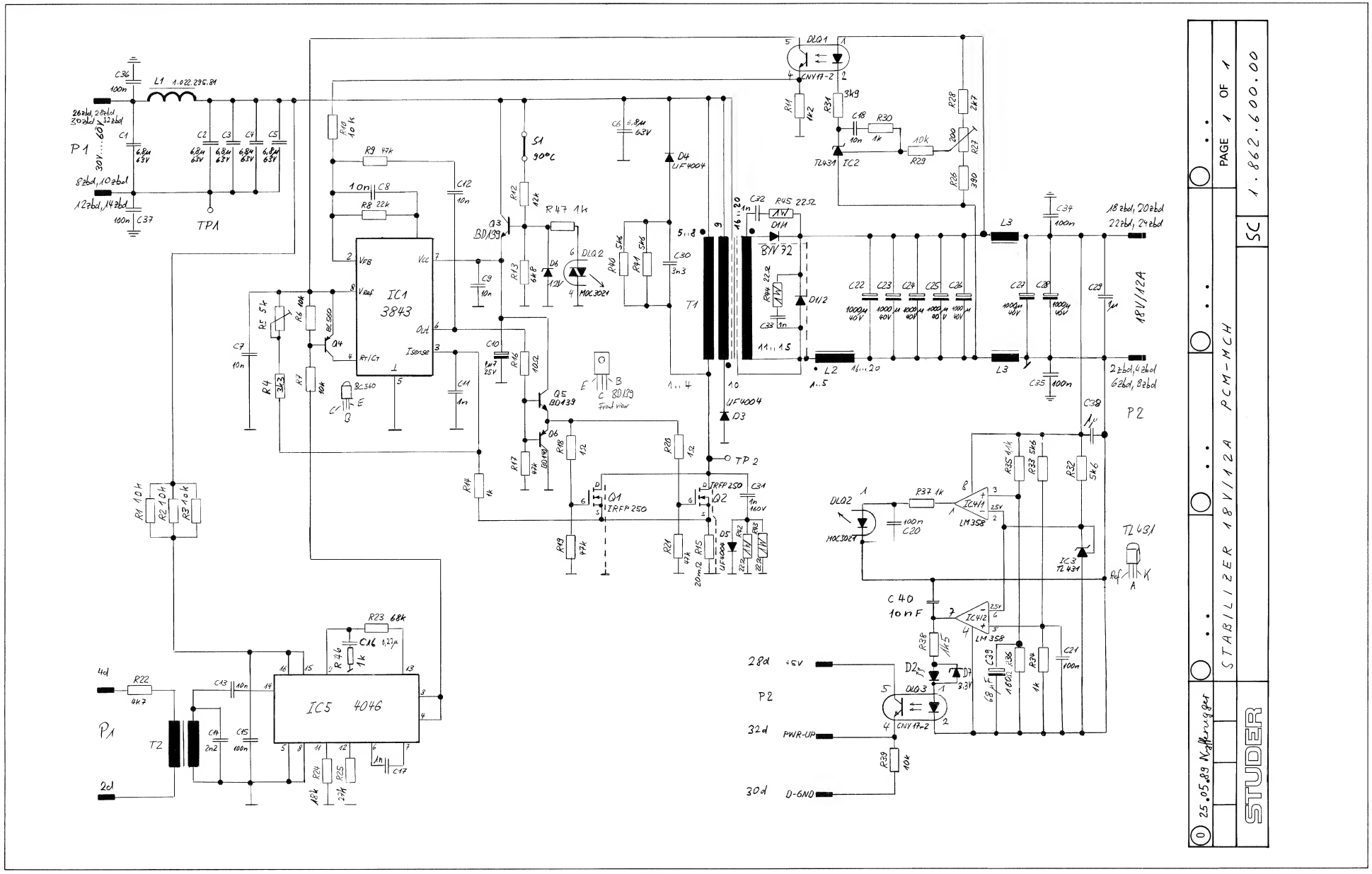

STABILIZER +18V 1.862.600.00

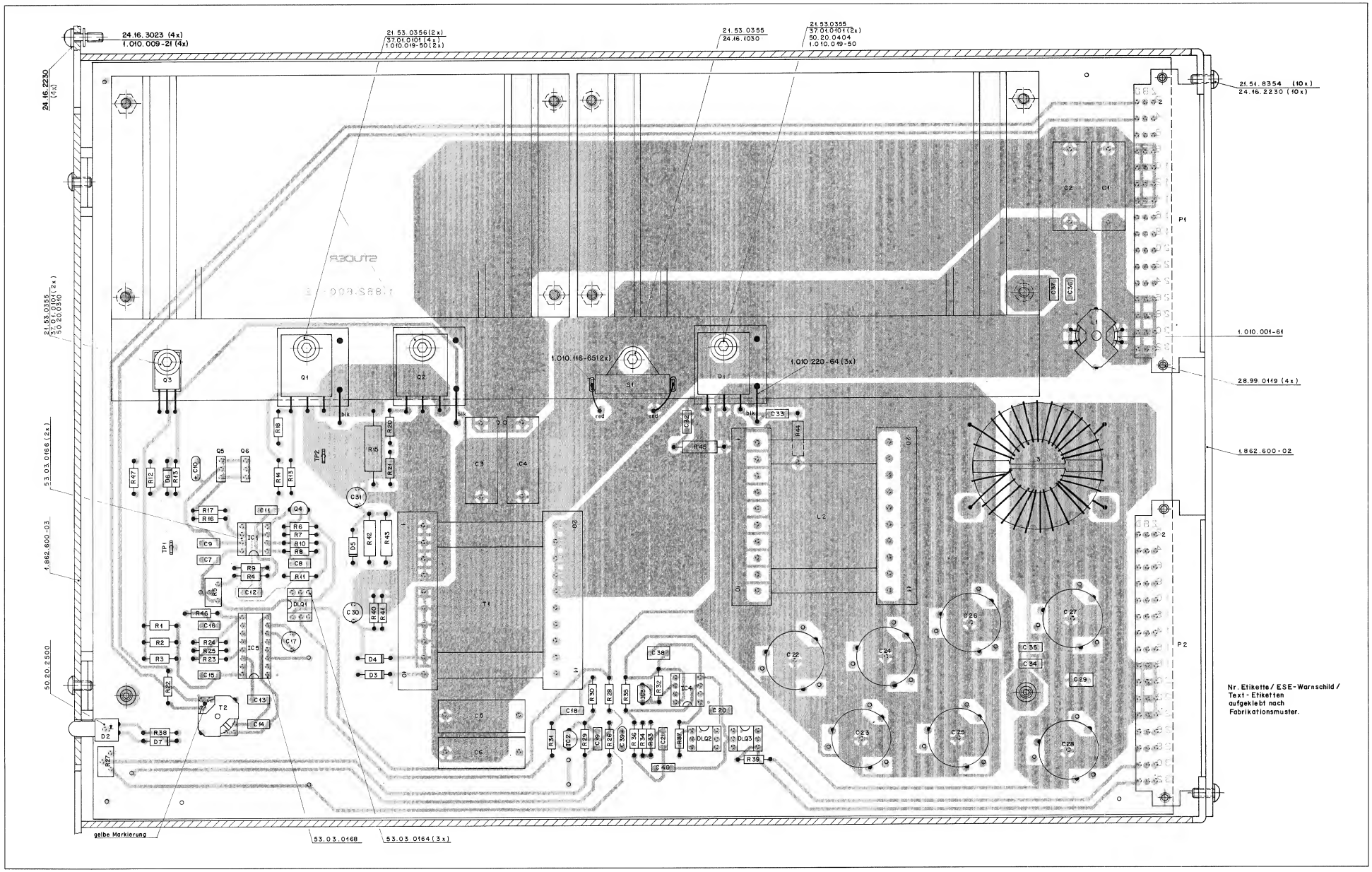

STABILIZER +18V 1.862.600.00

IND.	POS.NO.	PART NO.	VALUE	SPECIFICATIONS / EQUIVALENT	MANUF.
	C.....1	59.31.5685	6.8 uF	10%, 63V, MPETP	
	C.....2	59.31.5685	6.8 uF	10%, 63V, MPETP	
	C.....3	59.31.5685	6.8 uF	10%, 63V, MPETP	
	C.....4	59.31.5685	6.8 uF	10%, 63V, MPETP	
	C.....5	59.31.5685	6.8 uF	10%, 63V, MPETP	
	C.....6	59.31.5685	6.8 uF	10%, 63V, MPETP	
	C.....7	59.06.0103	10 nF	10%, 63V, PETP	
	C.....8	59.06.0103	10 nF	10%, 63V, PETP	
	C.....9	59.06.0103	10 nF	10%, 63V, PETP	
	C....10	59.26.5479	4.7 uF	20%, 25V, Sal	
	C....11	59.06.0102	1 nF	10%, 63V, PETP	
	C....12	59.06.0103	10 nF	10%, 63V, PETP	
	C....13	59.06.0103	10 nF	10%, 63V, PETP	
	C....14	59.06.0222	2.2 nF	10%, 63V, PETP	
	C....15	59.06.0104	100 nF	10%, 63V, PETP	
	C....16	59.06.0224	220 nF	10%, 63V, PETP	
	C....17	59.05.2102	1 nF	2.5%, 630V, PP	
	C....18	59.06.0103	10 nF	10%, 63V, PETP	
	C....19		not used		
	C....20	59.06.0104	100 nF	10%, 63V, PETP	
	C....21	59.06.0104	100 nF	10%, 63V, PETP	
	C....22	59.28.4102	1000 uF	20%, 40V, El	
	C....23	59.28.4102	1000 uF	20%, 40V, El	
	C....24	59.28.4102	1000 uF	20%, 40V, El	
	C....25	59.28.4102	1000 uF	20%, 40V, El	
	C....26	59.28.4102	1000 uF	20%, 40V, El	
	C....27	59.28.4102	1000 uF	20%, 40V, El	
	C....28	59.28.4102	1000 uF	20%, 40V, El	
	C....29	59.06.0105	1 uF	10%, 50V, PETP	
	C....30	59.05.2332	3.3 nF	2.5%, 160V, PP	
	C....31	59.05.2102	1 nF	2.5%, 630V, PP	
	C....32	59.06.0102	1 nF	10%, 63V, PETP	
	C....33	59.06.0102	1 nF	10%, 63V, PETP	
	C....34	59.06.0104	100 nF	10%, 63V, PETP	
	C....35	59.06.0104	100 nF	10%, 63V, PETP	
	C....36	59.06.0104	100 nF	10%, 63V, PETP	
	C....37	59.06.0104	100 nF	10%, 63V, PETP	

IND.	POS.NO.	PART NO.	VALUE	SPECIFICATIONS / EQUIVALENT	MANUF.
	C....38	59.06.0105	1 uF	10%, 50V, PETP	
	C....39	59.26.0680	68 uF	20%, 6.3V, Sal	
	C....40	59.06.0103	10 nF	10%, 63V, PETP	
	D.....1	50.04.0522	BYV 72-100	BYW 99P-100	
	D.....2	50.04.2109	MV 5053		
	D.....3	50.04.0138	UF 4004		
	D.....4	50.04.0138	UF 4004		
	D.....5	50.04.0138	UF 4004		
	D.....6	50.04.1222		18 V Z-Diode	
	D.....7	50.04.1107		3.3V Z-Diode 5% 0.4W	
	DLQ...1	50.04.3200	CNY17-2		
	DLQ...2	50.04.2139	MOC 3021		Mot
	DLQ...3	50.04.3200	CNY17-2		
	IC....1	50.10.0113	IP 3843N	UC 3843N	IPS/Un
	IC....2	50.10.0106	TL 431 CLP		Mot/TI
	IC....3	50.10.0106	TL 431 CLP		Mot/TI
	IC....4	50.05.0286	LM 358N		Mot
	IC....5	50.07.1046	MC14046BPC		Mot only
	L.....1	1.022.295.81		Filter coil	St
	L.....2	1.022.616.00		Choke Coil +18V	St
	L.....3	62.03.0115		Netzfilter >1.0mH, 15A	
	P.....1	54.11.2015		Euro Connector F , 3*16	
	P.....2	54.11.2015		Euro Connector F , 3*16	
	Q.....1	50.03.1612	IRF P250		
	Q.....2	50.03.1612	IRF P250		
	Q.....3	50.03.0451	BD 139		
	Q.....4	50.03.0496	BC 560		
	Q.....5	50.03.0451	BD 139		
	Q.....6	50.03.0452	BD 140		
	R.....1	57.11.3103	10 kOhm	1%	

IND.	POS.NO.	PART NO.	VALUE	SPECIFICATIONS / EQUIVALENT	MANUF.
	R.....2	57.11.3103	10 kOhm	1%	
	R.....3	57.11.3103	10 kOhm	1%	
	R.....4	57.11.3332	3.3 kOhm	1%	
	R.....5	58.01.9502	5 kOhm	see note 1	
	R.....6	57.11.3103	10 kOhm	1%	
	R.....7	57.11.3103	10 kOhm	1%	
	R.....8	57.11.3223	22 kOhm	1%	
	R.....9	57.11.3473	47 kOhm	1%	
	R....10	57.11.3103	10 kOhm	1%	
	R....11	57.11.3122	1.2 kOhm	1%	
	R....12	57.11.3123	12 kOhm	1%	
	R....13	57.11.3682	6.8 kOhm	1%	
	R....14	57.11.3102	1 kOhm	1%	
	R....15	57.56.2020	20 mOhm	5%, 3 W, Low Inductance	
	R....16	57.11.3100	10 Ohm	1%	
	R....17	57.11.3473	47 kOhm	1%	
	R....18	57.11.3109	1 Ohm	1%	
	R....19	57.11.3473	47 kOhm	1%	
	R....20	57.11.3109	1 Ohm	1%	
	R....21	57.11.3473	47 kOhm	1%	
	R....22	57.11.3472	4.7 kOhm	1%	
	R....23	57.11.3683	68 kOhm	1%	
	R....24	57.11.3183	18 kOhm	1%	
	R....25	57.11.3273	27 kOhm	1%	
	R....26	57.11.3391	390 Ohm	1%	
	R....27	58.01.9201	200 Ohm	see note 2	
	R....28	57.11.3272	2.7 kOhm	1%	
	R....29	57.11.3103	10 kOhm	1%	
	R....30	57.11.3102	1 kOhm	1%	
	R....31	57.11.3392	3.9 kOhm	1%	
	R....32	57.11.3562	5.6 kOhm	1%	
	R....33	57.11.3562	5.6 kOhm	1%	
	R....34	57.11.3102	1 kOhm	1%	
	R....35	57.11.3112	1.1 kOhm	1%	
	R....36	57.11.3161	160 Ohm	1%	
	R....37	57.11.3102	1 kOhm	1%	
	R....38	57.11.3152	1.5 kOhm	1%	

IND.	POS.NO.	PART NO.	VALUE	SPECIFICATIONS / EQUIVALENT	MANUF.
	R....39	57.11.3103	10 kOhm	1%	
	R....40	57.11.3562	5.6 kOhm	1%	
	R....41	57.11.3562	5.6 kOhm	1%	
	R....42	57.13.4220	22 Ohm	2%, 1W	
	R....43	57.13.4220	22 Ohm	2%, 1W	
	R....44	57.13.4220	22 Ohm	2%, 1W	
	R....45	57.13.4220	22 Ohm	2%, 1W	
	R....46	57.11.3102	1 kOhm	1%	
(01)	R....47	57.11.3102	1 kOhm	1%	
	S.....1	55.19.0005		Thermo switch, Tokin nr. OHD 3 - 90 BU	
	T.....1	1.022.615.00		Switching power transformer, 18 V	St
	T.....2	1.022.614.00		Synch. Transformer	St
	TP....1	54.02.0320		Test Point	
	TP....2	54.02.0320		Test Point	

Note 1 - Potentiometer, 5 kOhm: Bourns nr. 3386 X-1-502
Spectrol nr. 63 X 502 T 010
Murata nr. POT 3104 X-1-502

NOTE 2 - Potentiometer, 200 Ohm: Bourns nr. 3386 X-1-201
SpectroI nr. 63 X 201 T 010
Murata nr. POT 3104 X-1-201

El=Electrolytic, MPETP=Metalized Polyesterfilm, PETP=Polyesterfilm,
PP=Polypropylene, Sal=Solid aluminium

MANUFACTURER: Fc=FairchiId, ITT=IntermetaII, IR=InternationaI Rectifier,
Mot=Motorola, NS=National Semiconductors, Ph=Philips,
RCA=RCA Corp. of America, Ses=Sescosem, SGS=SGS/Ates,
Sie=Siemens, Six=Siliconix, St=Studer, Tf=Telefunken,
Tho=Thomson CSF, TI=Texas Instruments, To=Toshiba,
GI=General Instruments.

ORIG 89/05/24 (01) 89/11/06

BLOCKDIAGRAM STABILIZER 5V/30A PCM-MCH 1.862.601.00

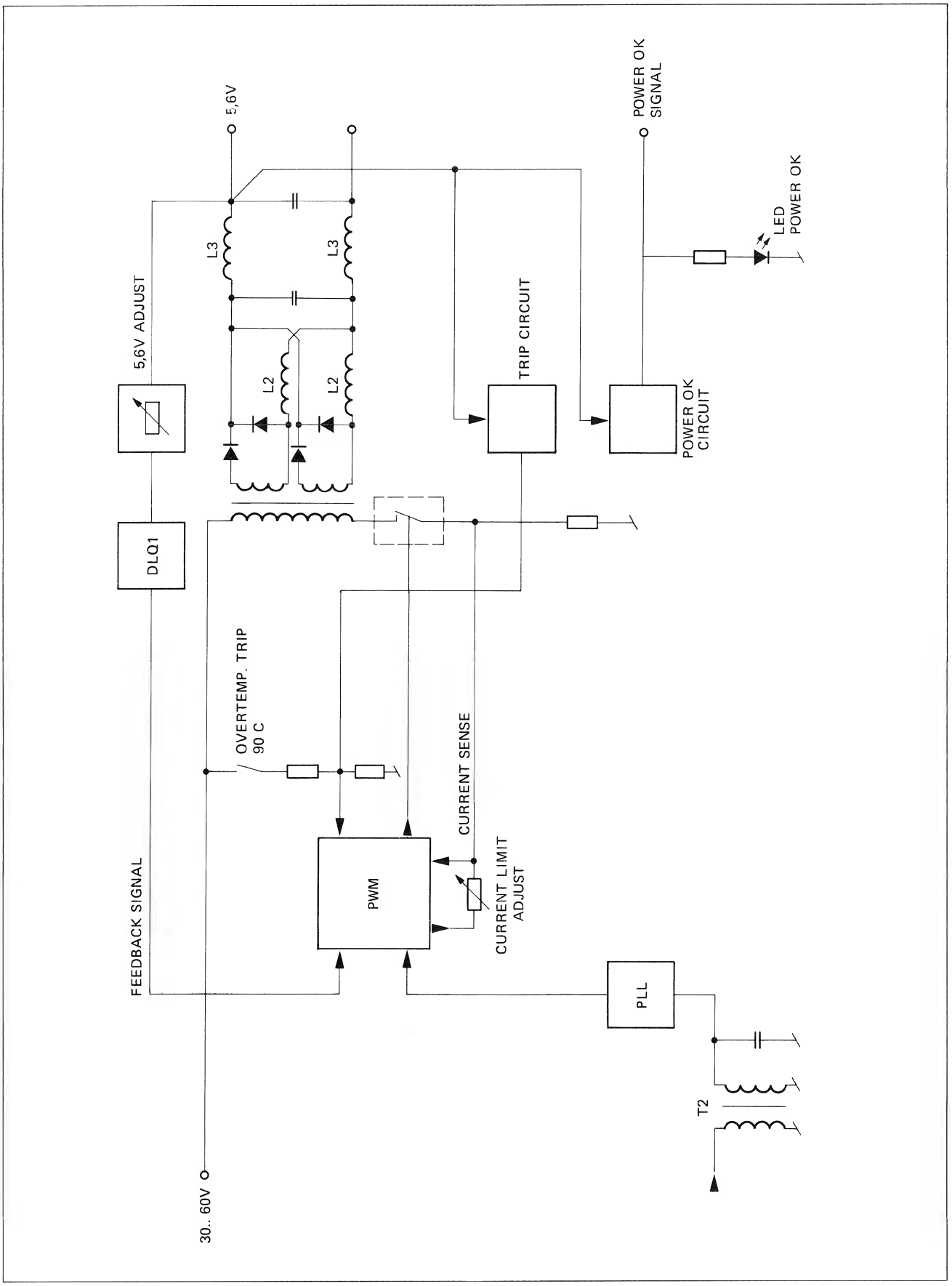

STABILIZER +5V 1.862.601.00

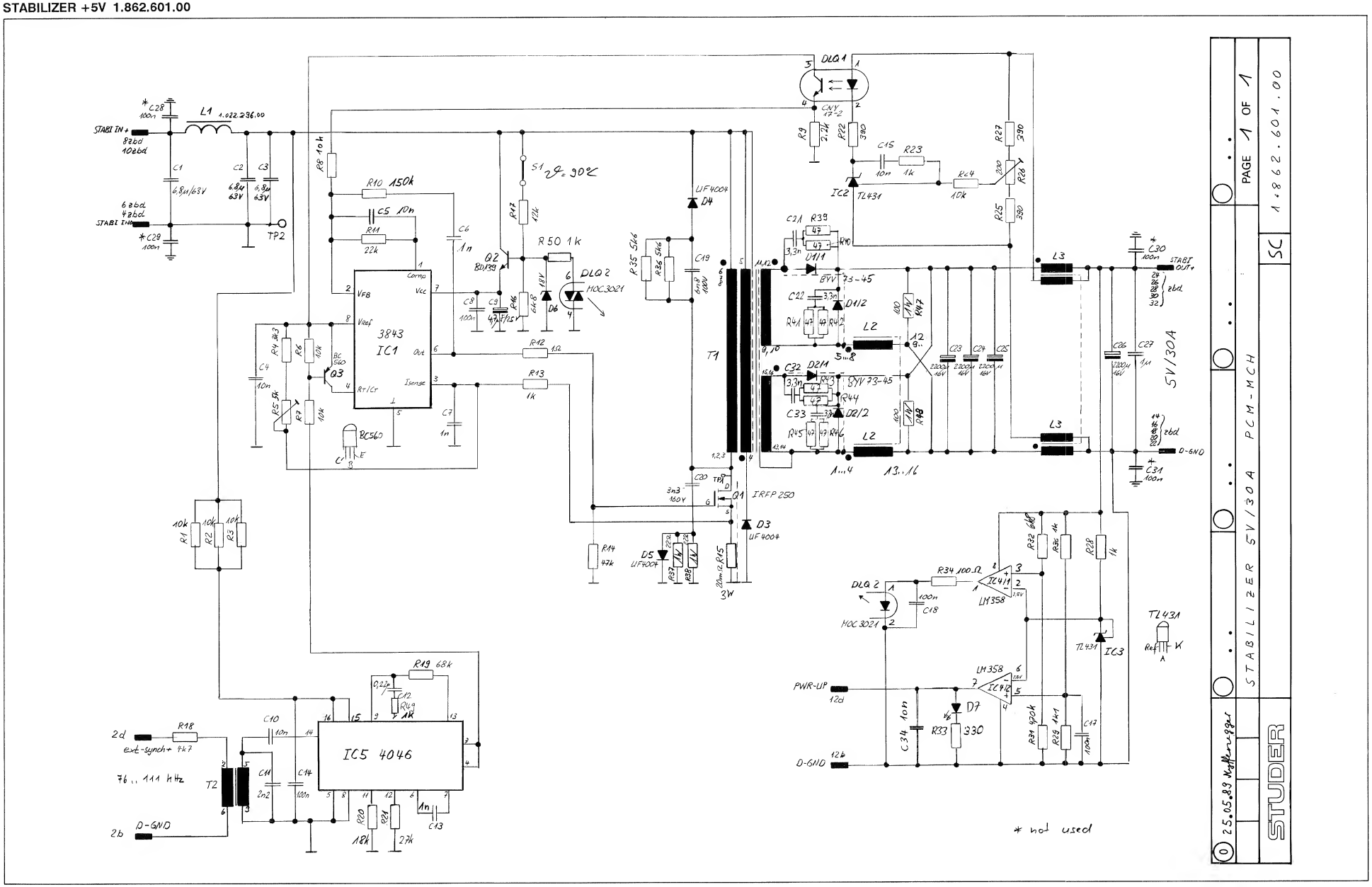

STABILIZER +5V 1.862.601.00

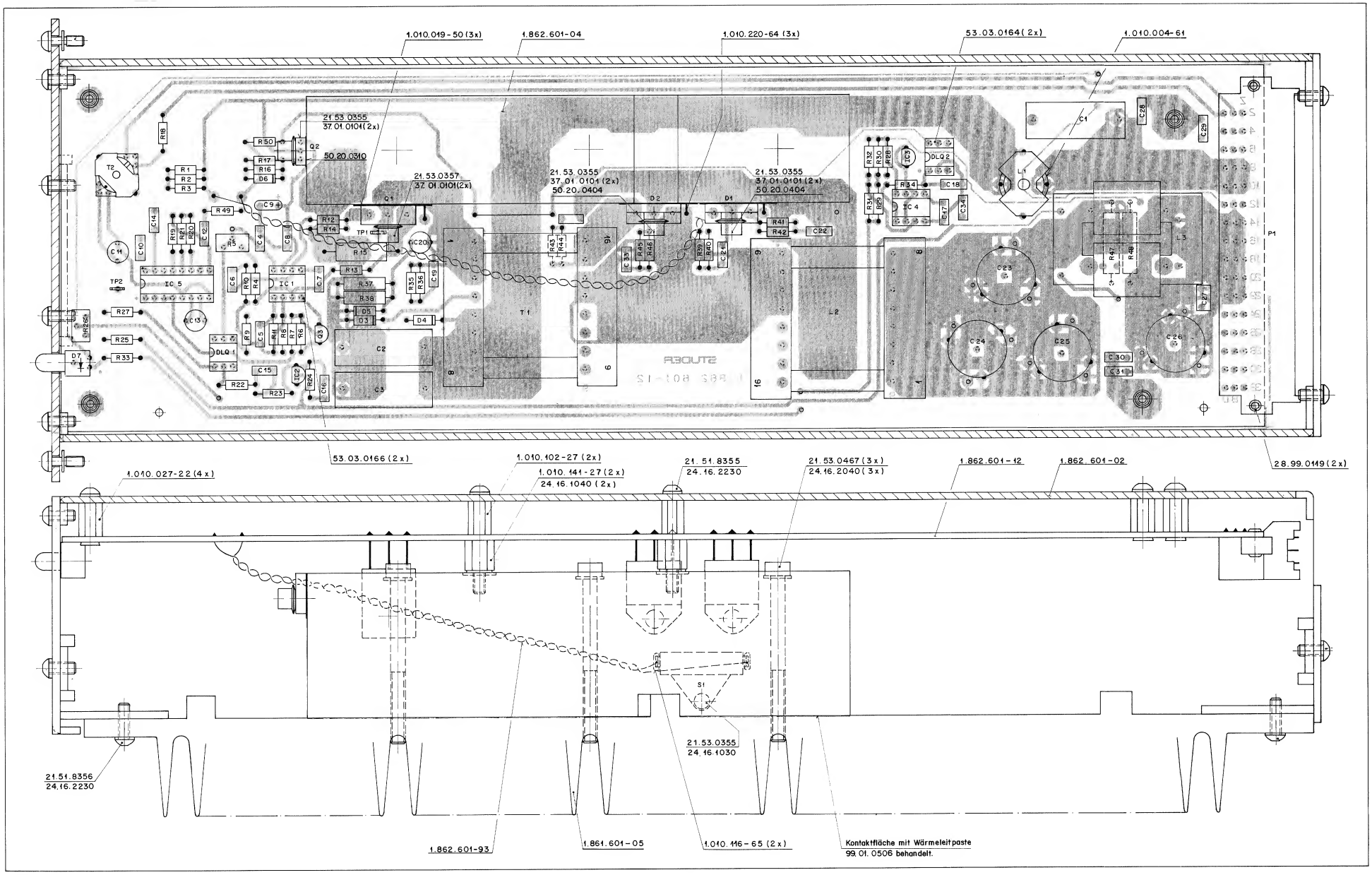

STABILIZER +5V 1.862.601.00

IND.	POS.NO.	PART NO.	VALUE	SPECIFICATIONS / EQUIVALENT	MANUF.
	C.....1	59.31.5685	6.8 uF	10%, 63V, MPETP	
	C.....2	59.31.5685	6.8 uF	10%, 63V, MPETP	
	C.....3	59.31.5685	6.8 uF	10%, 63V, MPETP	
	C.....4	59.06.0103	10 nF	10%, 63V, PETP	
	C.....5	59.06.0103	10 nF	10%, 63V, PETP	
	C.....6	59.06.0102	1 nF	10%, 63V, PETP	
	C.....7	59.06.0102	1 nF	10%, 63V, PETP	
	C.....8	59.06.0104	100 nF	10%, 63V, PETP	
	C.....9	59.26.5479	4.7 uF	20%, 25V, Sal	
	C....10	59.06.0103	10 nF	10%, 63V, PETP	
	C....11	59.05.2222	2.2 nF	2.5%, 160V, PP	
	C....12	59.06.0224	220 nF	10%, 63V, PETP	
	C....13	59.05.2102	1 nF	2.5%, 630V, PP	
	C....14	59.06.0104	100 nF	10%, 63V, PETP	
	C....15	59.06.0103	10 nF	10%, 63V, PETP	
	C....16		not used		
	C....17	59.06.0104	100 nF	10%, 63V, PETP	
	C....18	59.06.0104	100 nF	10%, 63V, PETP	
	C....19	59.06.0682	6.8 nF	10%, 63V, PETP	
	C....20	59.05.2332	3.3 nF	2.5%, 160V, PP	
	C....21	59.06.0332	3.3 nF	10%, 63V, PETP	
	C....22	59.06.0332	3.3 nF	10%, 63V, PETP	
	C....23	59.28.2222	2200 uF	20%, 16V, El	
	C....24	59.28.2222	2200 uF	20%, 16V, El	
	C....25	59.28.2222	2200 uF	20%, 16V, El	
	C....26	59.28.2222	2200 uF	20%, 16V, El	
	C....27	59.06.0105	1 uF	10%, 50V, PETP	
	C....28		not used		
	C....29		not used		
	C....30		not used		
	C....31		not used		
	C....32	59.06.0332	3.3 nF	10%, 63V, PETP	
	C....33	59.06.0332	3.3 nF	10%, 63V, PETP	
	C....34	59.06.0103	10 nF	10%, 63V, PETP	
	D.....1	50.04.0520	BYV 73-45,	MBR 3045PT	Mot,Ph
	D.....2	50.04.0520	BYV 73-45,	MBR 3045PT	Mot,Ph

IND.	POS.NO.	PART NO.	VALUE	SPECIFICATIONS / EQUIVALENT	MANUF.
	D.....3	50.04.0138	UF 4004		
	D.....4	50.04.0138	UF 4004		
	D.....5	50.04.0138	UF 4004		
	D.....6	50.04.1222		18V Z-Diode	
	D.....7	50.04.2109	MV 5053		
	DLG...1	50.04.3200	CNY17-2		
	DLG...2	50.04.2139	MOC 3021		Mot
	IC....1	50.10.0113	IP 3843N	UC 3843N	IPS,Un
	IC....2	50.10.0106	TL 431 CLP		Mot,TI
	IC....3	50.10.0106	TL 431 CLP		Mot,TI
	IC....4	50.05.0286	LM 358N		Mot
	IC....5	50.07.1046	MC14046BPC	...	Mot only
	L.....1	1.022.296.00		Filter coil	St
	L.....2	1.022.611.00		Choke +5V	St
	L.....3	1.022.612.00		Common Mode Choke +5V	St
	P.....1	54.11.2015		Euro Connector F, 3*16,	
	Q.....1	50.03.1612	IRF P250		IR,Un,Sa
	Q.....2	50.03.0451	BD 139		any
	Q.....3	50.03.0496	BC 560		any
	R.....1	57.11.3103	10 kOhm	1%	
	R.....2	57.11.3103	10 kOhm	1%	
	R.....3	57.11.3103	10 kOhm	1%	
	R.....4	57.11.3332	3.3 kOhm	1%	
	R.....5	58.01.9502	5 kOhm	10%, see note 1	
	R.....6	57.11.3103	10 kOhm	1%	
	R.....7	57.11.3103	10 kOhm	1%	
	R.....8	57.11.3103	10 kOhm	1%	
	R.....9	57.11.3222	2.2 kOhm	1%	
	R....10	57.11.3154	150 kOhm	1%	
	R....11	57.11.3223	22 kOhm	1%	
	R....12	57.11.3109	1 Ohm	1%	

IND.	POS.NO.	PART NO.	VALUE	SPECIFICATIONS / EQUIVALENT	MANUF.
	R....13	57.11.3102	1 kOhm	1%	
	R....14	57.11.3473	47 kOhm	1%	
	R....15	57.56.2020	20 mOhm	5%, 3 W, Low Inductance	
	R....16	57.11.3682	6.8 kOhm	1%	
	R....17	57.11.3123	12 kOhm	1%	
	R....18	57.11.3472	4.7 kOhm	1%	
	R....19	57.11.3683	68 kOhm	1%	
	R....20	57.11.3183	18 kOhm	1%	
	R....21	57.11.3273	27 kOhm	1%	
	R....22	57.11.3391	390 Ohm	1%	
	R....23	57.11.3102	1 kOhm	1%	
	R....24	57.11.3103	10 kOhm	1%	
	R....25	57.11.3391	390 Ohm	1%	
	R....26	58.01.9201	200 Ohm	10%, see note 2	
	R....27	57.11.3391	390 Ohm	1%	
	R....28	57.11.3102	1 kOhm	1%	
	R....29	57.11.3102	1 kOhm	1%	
	R....30	57.11.3102	1 kOhm	1%	
	R....31	57.11.3472	4.7 kOhm	1%	
	R....32	57.11.3682	6.8 kOhm	1%	
	R....33	57.11.3331	330 Ohm	1%	
	R....34	57.11.3101	100 Ohm	1%	
	R....35	57.11.3562	5k6 kOhm	1%	
	R....36	57.11.3562	5k6 kOhm	1%	
	R....37	57.13.4220	22 Ohm	2% 1W	
	R....38	57.13.4220	22 Ohm	2% 1W	
	R....39	57.11.3470	47 Ohm	1%	
	R....40	57.11.3470	47 Ohm	1%	
	R....41	57.11.3470	47 Ohm	1%	
	R....42	57.11.3470	47 Ohm	1%	
	R....43	57.11.3470	47 Ohm	1%	
	R....44	57.11.3470	47 Ohm	1%	
	R....45	57.11.3470	47 Ohm	1%	
	R....46	57.11.3470	47 Ohm	1%	
	R....47	57.13.4101	100 Ohm	2% 1W	
	R....48	57.13.4101	100 Ohm	2% 1W	
	R....49	57.11.3102	1 kOhm	1%	

IND.	POS.NO.	PART NO.	VALUE	SPECIFICATIONS / EQUIVALENT	MANUF.
(01)	R....50	57.11.3102	1 kOhm	1%	
	S.....1	55.19.0005		Thermo switch, Tokin nr. OHD 3 - 90 BU	
	T.....1	1.022.613.00		Switching power transformer +5 V	St
	T.....2	1.022.614.00		Synch. Transformer	St
	TP....1	54.02.0320		Test point	
	TP....2	54.02.0320		Test point	

Note 1 - Potentiometer, 5 kOhm: Bourns nr. 3386 X-1-502
Spectrol nr. 63 X 502 T 010
Murata nr. POT 3104 X-1-502

NOTE 2 - Potentiometer, 200 Ohm: Bourns nr. 3386 X-1-201
Spectrol nr. 63 X 201 T 010
Murata nr. POT 3104 X-1-201

El=Electrolytic, MPETP=Metalized Polyesterfilm, PETP=Polyesterfilm,
PP=Polypropylene, Sal=Solid aluminium

MANUFACTURER: Fc=Fairchild, ITT=Intermetall, IR=International Rectifier,
Mot=Motorola, NS=National Semiconductors, Ph=Philips,
RCA=RCA Corp. of America, Sem=Semcosem, SGS=SGS/Ates,
Sie=Siemens, Six=Siliconix, St=Studer, Tf=Telefunken,
Tho=Thomson CSF, TI=Texas Instruments, To=Toshiba,
GI=General Instruments.

ORIG 89/05/23 (01) 89/11/06

BLOCKDIAGRAM POWER SUPPLY 1.862.620.81

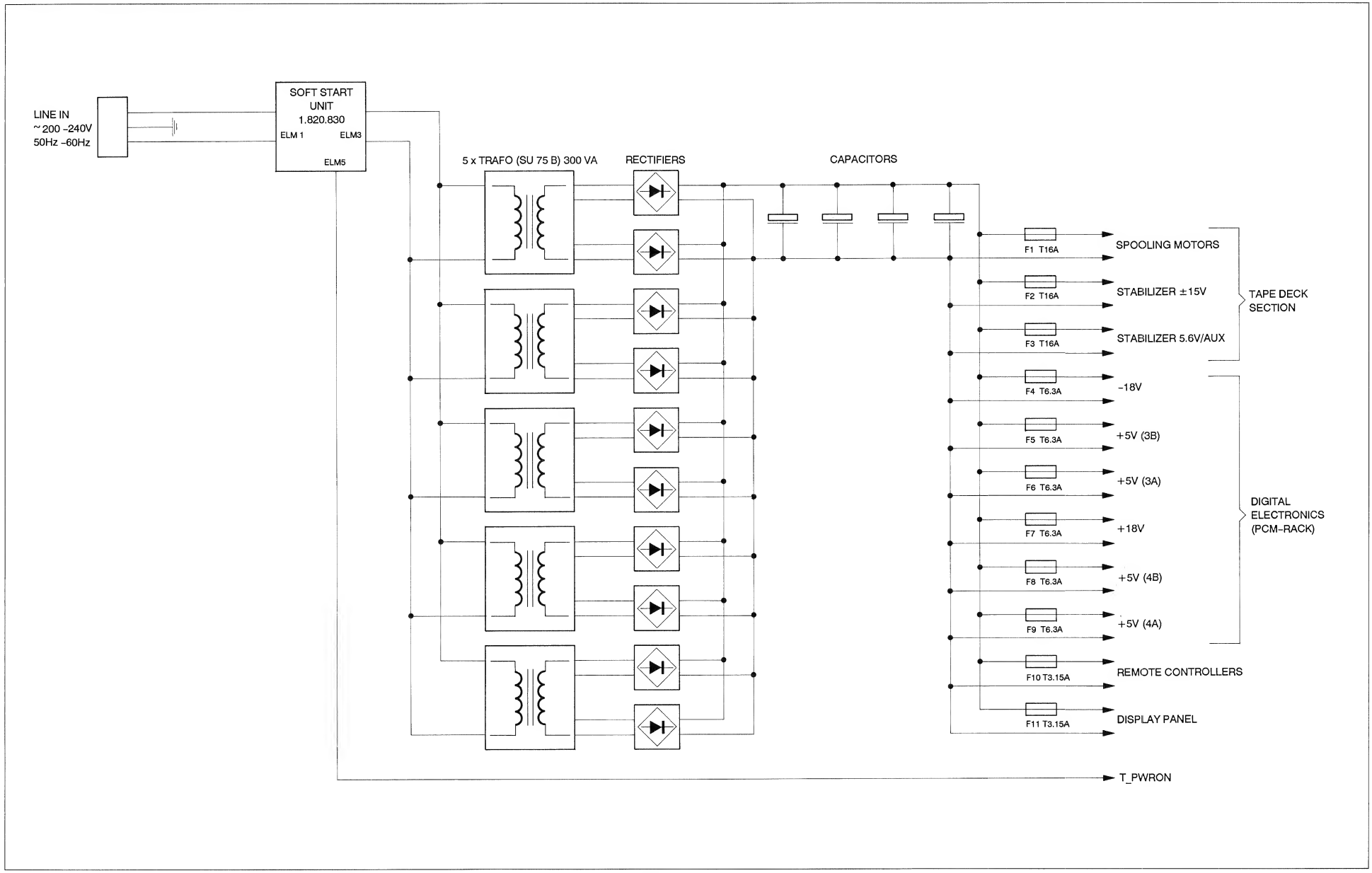

POWER SUPPLY 1.862.620.81

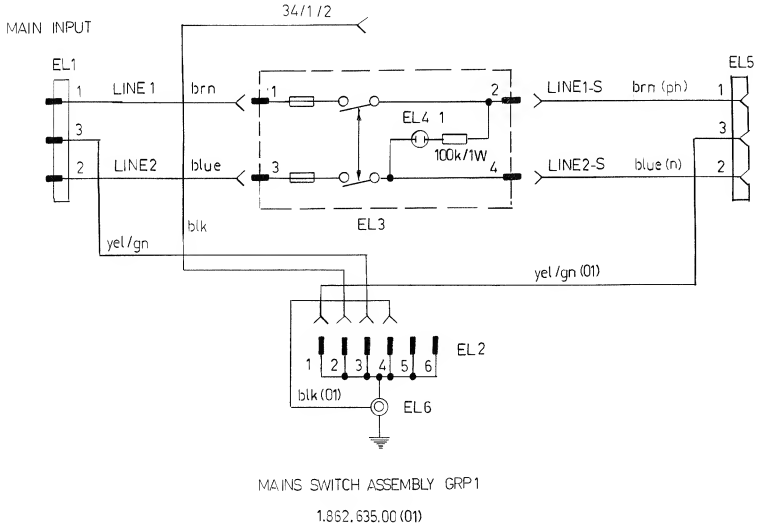

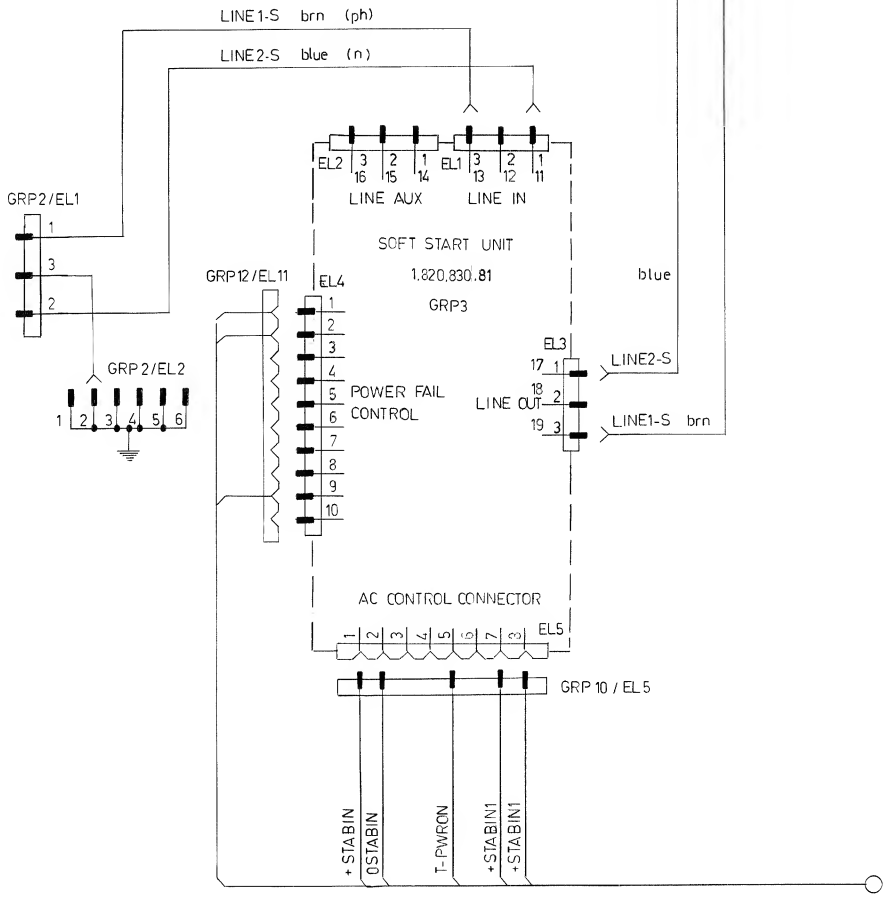

0 12.07.90 HAESSIG				PAGE 1 OF 3
	D 820 MCH			
STUDER	POWER SUPPLY	SC	1.862.620.81	

POWER SUPPLY 1.862.620.81

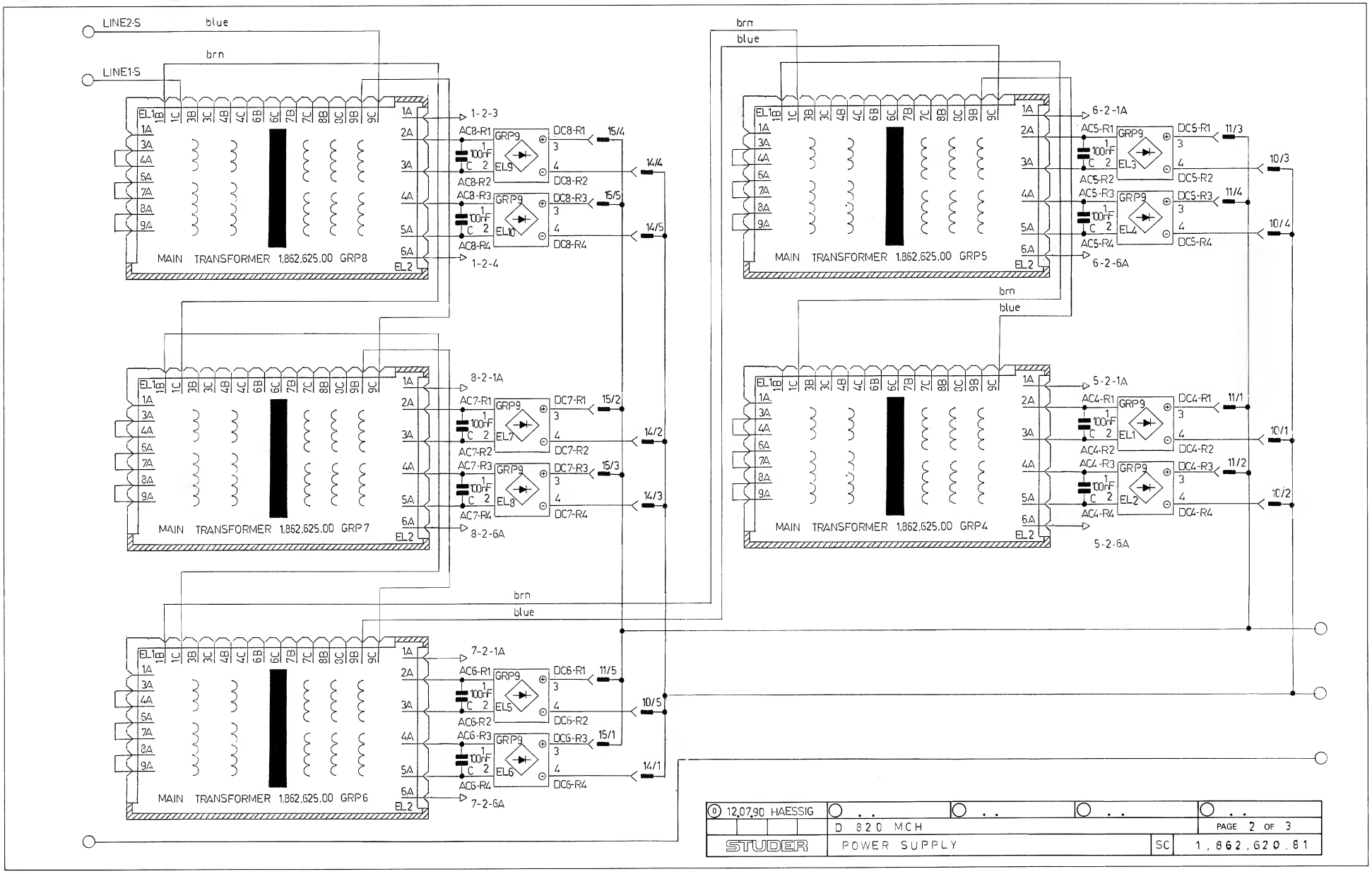

POWER SUPPLY 1.862.620.81

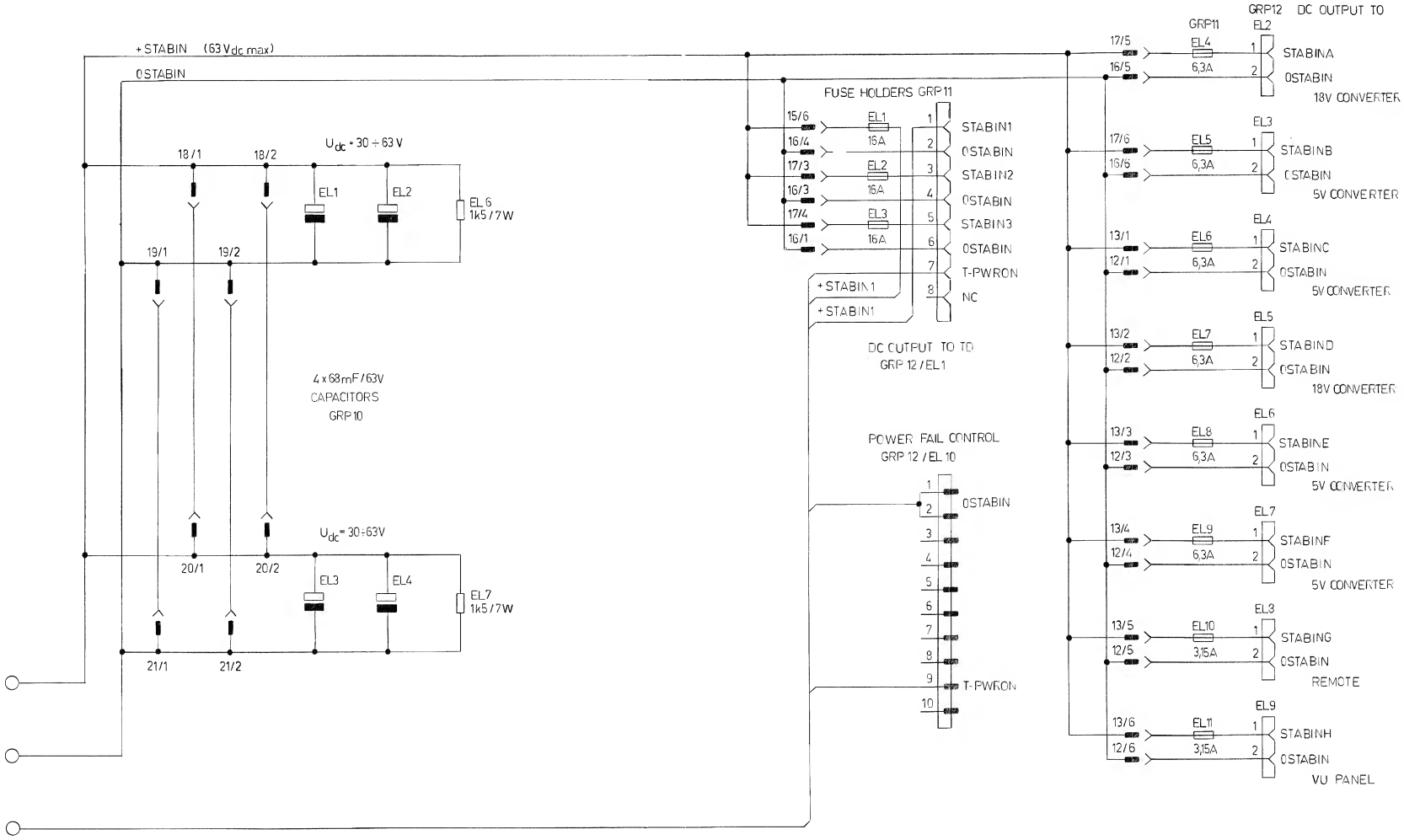

POWER SUPPLY 1.862.620.81

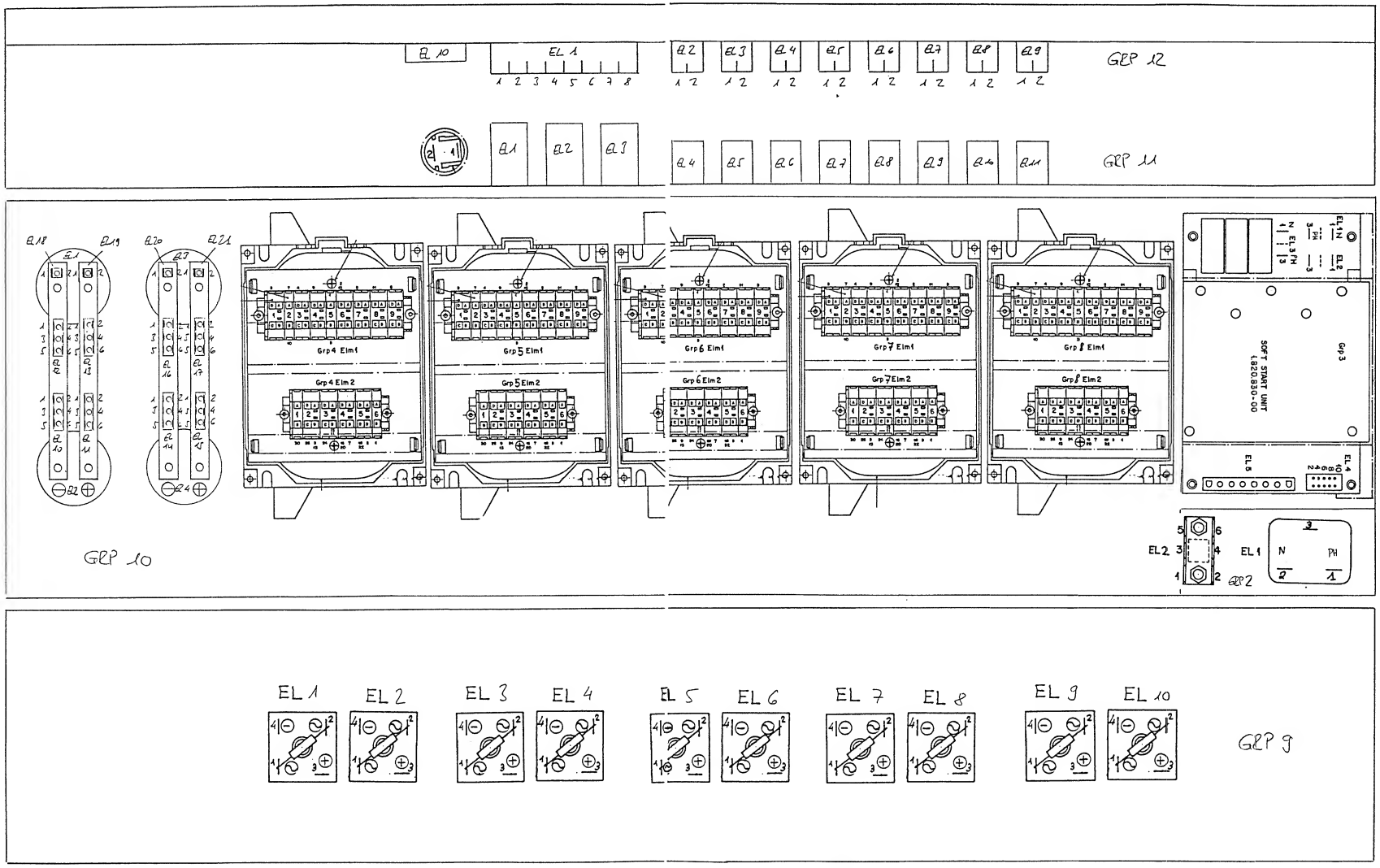

BASIS BOARD TAPE DECK 1.862.701.00

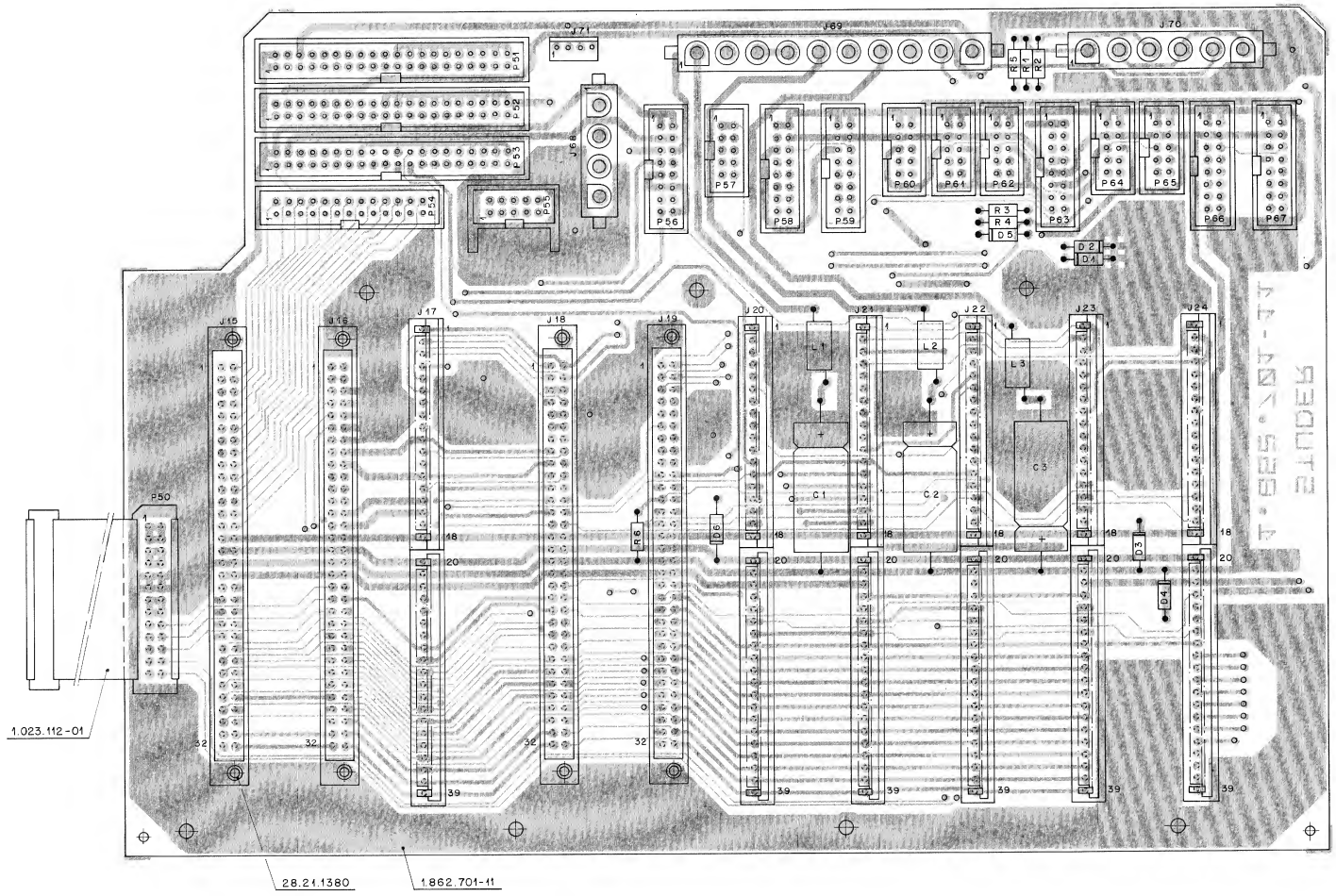

IND.	POS.NO.	PART NO.	VALUE	SPECIFICATIONS / EQUIVALENT	MANUF.
	C.....1	59.25.1102	1000 uF	-10%, 6.3V, El	
	C.....2	59.25.3102	1000 uF	-10%, 16V, El	
	C.....3	59.25.3102	1000 uF	-10%, 16V, El	
	D.....1	50.04.0122	1N 4001	...1N 4004	GI,Mot,ITT
	D.....2	50.04.0122	1N 4001	...1N 4004	GI,Mot,ITT
	D.....3	50.04.0122	1N 4001	...1N 4004	GI,Mot,ITT
	D.....4	50.04.0122	1N 4001	...1N 4004	GI,Mot,ITT
	D.....5	50.04.0125	1N 4148		Fc,ITT,Ph,SES,Tf
	D.....6	50.04.1503	7.5 V Z	BZX 85 C 7V5	ITT,Mot,Ph,Tf,SES,Tho
	J....15	54.11.2005	Connector	2 x 32 Euro Print	
	J....16	54.11.2005	Connector	2 x 32 Euro Print	
	J....17	54.10.2015	Connector	18 + 20 Contacts, see note 1	
	J....18	54.11.2005	Connector	2 x 32 Euro Print	
	J....19	54.11.2005	Connector	2 x 32 Euro Print	
	J....20	54.10.2015	Connector	18 + 20 Contacts, see note 1	
	J....21	54.10.2015	Connector	18 + 20 Contacts, see note 1	
	J....22	54.10.2015	Connector	18 + 20 Contacts, see note 1	
	J....23	54.10.2015	Connector	18 + 20 Contacts, see note 1	
	J....24	54.10.2015	Connector	18 + 20 Contacts, see note 1	
	J....68	54.25.0004	Connector	4 Contacts	AMP
	J....69	54.25.0010	Connector	10 Contacts	AMP
	J....70	54.25.0006	Connector	6 Contacts	AMP
	J....71	54.99.0213	Connector	4 Contacts	AMP
	L.....1	62.01.0115	HF Coil		Ph
	L.....2	62.01.0115	HF Coil		Ph
	L.....3	62.01.0115	HF Coil		Ph
	P....50	1.023.112.01	Cable	26 Contacts, Flat Cable	
	P....51	54.14.2004	Connector	40 Contacts, Flat Cable	
	P....52	54.14.2004	Connector	40 Contacts, Flat Cable	
	P....53	54.14.2004	Connector	40 Contacts, Flat Cable	
	P....54	54.14.2003	Connector	26 Contacts, Flat Cable	
	P....55	54.14.2101	Connector	10 Contacts, Latch, Flat Cable	
	P....56	54.14.2002	Connector	16 Contacts, Flat Cable	

S T U D E R (00) 89/04/21 IVA BASIS BOARD TAPE DECK PL 1.862.701.00 PAGE 1

IND.	POS.NO.	PART NO.	VALUE	SPECIFICATIONS / EQUIVALENT	MANUF.
	P....57	54.14.2001	Connector	10 Contacts, Flat Cable	
	P....58	54.14.2002	Connector	16 Contacts, Flat Cable	
	P....59	54.14.2002	Connector	16 Contacts, Flat Cable	
	P....60	54.14.2001	Connector	10 Contacts, Flat Cable	
	P....61	54.14.2001	Connector	10 Contacts, Flat Cable	
	P....62	54.14.2001	Connector	10 Contacts, Flat Cable	
	P....63	54.14.2002	Connector	16 Contacts, Flat Cable	
	P....64	54.14.2001	Connector	10 Contacts, Flat Cable	
	P....65	54.14.2001	Connector	10 Contacts, Flat Cable	
	P....66	54.14.2002	Connector	16 Contacts, Flat Cable	
	P....67	54.14.2002	Connector	16 Contacts, Flat Cable	
	R.....1	57.19.0101	100 Ohm	1%	
	R.....2	57.19.0101	100 Ohm	1%	
	R.....3	57.19.0101	100 Ohm	1%	
	R.....4	57.11.3332	3.3 kOhm	1%	
	R.....5	57.11.3273	27 kOhm	1%	
	R.....6	57.11.3182	1.8 kOhm	1%	

Note 1 = 2 connectors:
18 contacts, Studer nr. 54.10.2015
Burndy nr. SC5B 18 50 19 V1 K9
20 contacts, Studer nr. 54.10.2026
Burndy nr. SC5B 20 50 V1 K9

El=Electrolytic

MANUFACTURER: Fc=Fairchild, GI=General Instruments, ITT=Intermetall,
Mot=Motorola, Ph=Philips, SES=Semcosem, SGS=SGS/Ates,
Tf=Telefunken, Tho=Thomson.

ORIG 89/04/21

S T U D E R (00) 89/04/21 IVA BASIS BOARD TAPE DECK PL 1.862.701.00 PAGE 2

CAPSTAN PHASE CONTROL BOARD 1.862.714.00

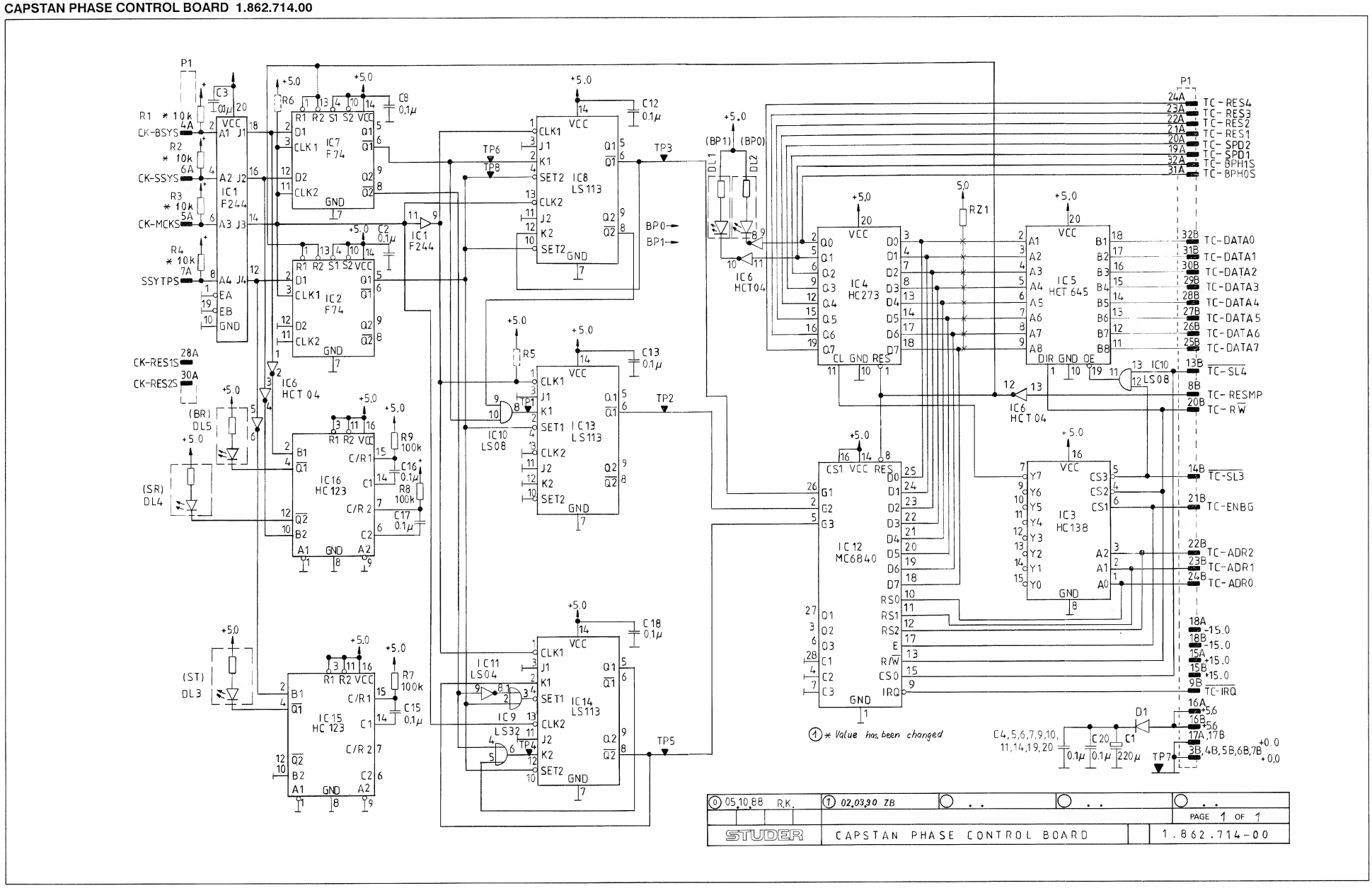

CAPSTAN PHASE CONTROL BOARD 1.862.714.00

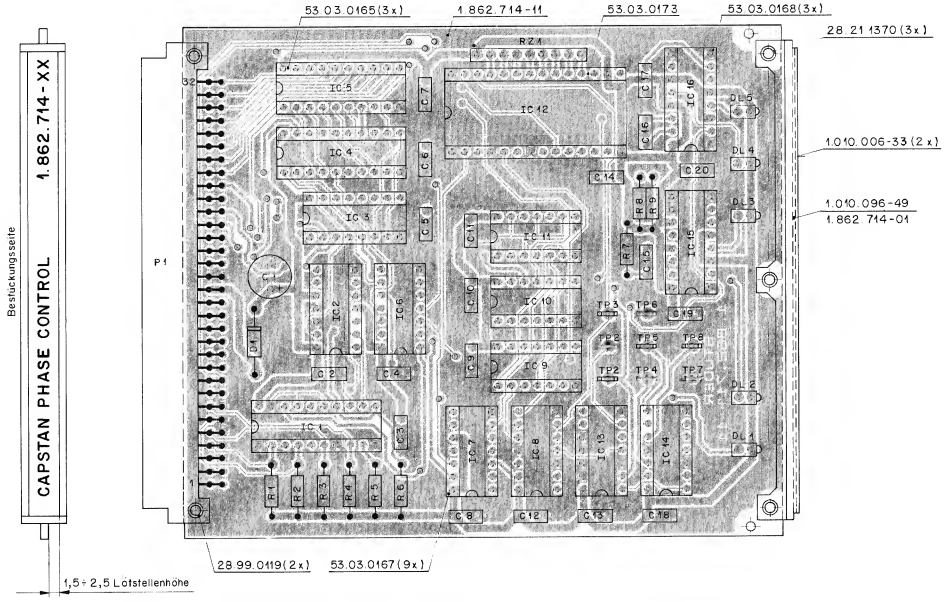

IND.	POS.NO.	PART NO.	VALUL	SPECIFICATIONS / EQUIVALENT	MANUF.
	C....1	59.22.3221	220 uF	10V , El	
	C....2	59.06.0104	100 nF	10%, 63V , PETP	
	C....3	59.06.0104	100 nF	10%, 63V , PETP	
	C....4		not used		
	C....5	59.06.0104	100 nF	10%, 63V , PETP	
	C....6		not used		
	C....7	59.06.0104	100 nF	10%, 63V , PETP	
	C....8	59.06.0104	100 nF	10%, 63V , PETP	
	C....9	59.06.0104	100 nF	10%, 63V , PETP	
	C....10		not used		
	C....11		not used		
	C....12	59.06.0104	100 nF	10%, 63V , PETP	
	C....13		not used		
	C....14		not used		
	C....15	59.06.0104	100 nF	10%, 63V , PETP	
	C....16	59.06.0104	100 nF	10%, 63V , PETP	
	C....17	59.06.0104	100 nF	10%, 63V , PETP	
	C....18	59.06.0104	100 nF	10%, 63V , PETP	
	C....19	59.06.0104	100 nF	10%, 63V , PETP	
	C....20		not used		
	D.....1	50.04.0512	1N 5818	1N 5819	Mot
	DL....1	50.04.2107	555-2007		Di
	DL....2	50.04.2107	555-2007		Di
	DL....3	50.04.2107	555-2007		Di
	DL....4	50.04.2107	555-2007		Di
	DL....5	50.04.2107	555-2007		Di
	IC....1	50.21.0244	74 F244 PC	N 74 F 244 PC	Fc,Sig
	IC....2	50.21.0074	74 F 74 PC	MC 74 F 74 N	Fc,Mot
	IC....3	50.17.1138	CD74HC138E	.. 74 HC 138 .	Mot,NS,Ph,RCA,SGS,Tho,TI,To
	IC....4	50.17.1273	CD74HC273E	.. 74 HC 273 .	Mot,NS,Ph,RCA,SGS,Tho,TI,To
	IC....5	50.17.0645		SN 74 HCT 645 N	TI
	IC....6	50.17.0004	CD74HCT04E	.. 74 HCT 04 .	Mot,NS,Ph,RCA,SGS,Tho,Te
	IC....7	50.21.0074	74 F 74 PC	MC 74 F 74 N	Fc,Mot
	IC....8	50.06.0113	N74LS113N	SN 74 LS 113 N	Sig,TI

S T U D E R (01) 90/03/02 BBT CAPSTAN PHASE CONTROL BOARD PL 1.862.714.00 PAGE 1

IND.	POS.NO.	PART NO.	VALUE	SPECIFICATIONS / EQUIVALENT	MANUF.
	IC....9	50.06.0032	74LS 32PC	.. 74 LS 32 .	Fc,NS,Sig,TI
	IC...10	50.06.0008	N74LS 08N	.. 74 LS 08 .	NS,Sig,TI
	IC...11	50.06.0004	74LS 04PC	.. 74 LS 04 .	Fc,NS,Sig,TI
	IC...12	50.16.0113	MC 68A40 P	HD 68 A 40 P	Hi,Mot
	IC...13	50.06.0113	N74LS113N	SN 74 LS 113 N	Sig,TI
	IC...14	50.06.0113	N74LS113N	SN 74 LS 113 N	Sig,TI
	IC...15	50.17.1123	CD74HC123E	.. 74 HC 123 .	NS,Ph,RCA,SGS,Tho,To
	IC...16	50.17.1123	CD74HC123E	.. 74 HC 123 .	NS,Ph,RCA,SGS,Tho,Te
	P.....1	54.11.2004	Connector	EURO 2 * 32, PRINT	
(00)	R.....1	57.11.3221	220 Ohm	1%	
(01)	R.....1	57.11.3103	10 kOhm	10%	
(00)	R.....2	57.11.3221	220 Ohm	1%	
(01)	R.....2	57.11.3103	10 kOhm	10%	
(00)	R.....3	57.11.3221	220 Ohm	1%	
(01)	R.....3	57.11.3103	10 kOhm	10%	
(00)	R.....4	57.11.3221	220 Ohm	1%	
(01)	R.....4	57.11.3103	10 kOhm	10%	
	R.....5		not used		
	R.....6		not used		
	R.....7	57.11.3104	100 kOhm	1%	
	R.....8	57.11.3104	100 kOhm	1%	
	R.....9	57.11.3104	100 kOhm	1%	
	RZ....1	57.88.4103	8*10 kOhm	SIP 9	
	TP....1	54.02.0320	Testpoint		
	TP....2	54.02.0320	Testpoint		
	TP....3	54.02.0320	Testpoint		
	TP....4	54.02.0320	Testpoint		
	TP....5	54.02.0320	Testpoint		
	TP....6	54.02.0320	Testpoint		
	TP....7	54.02.0320	Testpoint		
	TP....8	54.02.0320	Testpoint		

S T U D E R (01) 90/03/02 BBT CAPSTAN PHASE CONTROL BOARD PL 1.862.714.00 PAGE 2

IND.	POS.NO.	PART NO.	VALUE	SPECIFICATIONS / EQUIVALENT	MANUF.

(01) 02.03.90 Value of pull-up resistors R1 to R4 increased, because of driver overload.

El=Electrolytic, PETP=Polyesterfilm

MANUFACTURER: Di=Dialco, Fc=Fairchild, Hi=Hitachi, Mot=Motorola, NS=National Semiconductors, Ph=Philips, RCA=Radio Corporation of America, SGS=SGS/Ates, Sig=Signetics, Tho=Thomson, TI=Texas Instruments, To=Toshiba.

ORIG 89/05/10 (01) 90/03/02

S T U D E R (01) 90/03/02 BBT CAPSTAN PHASE CONTROL BOARD PL 1.862.714.00 PAGE 3

CONVERTER RS422/TTL 1.862.715.00

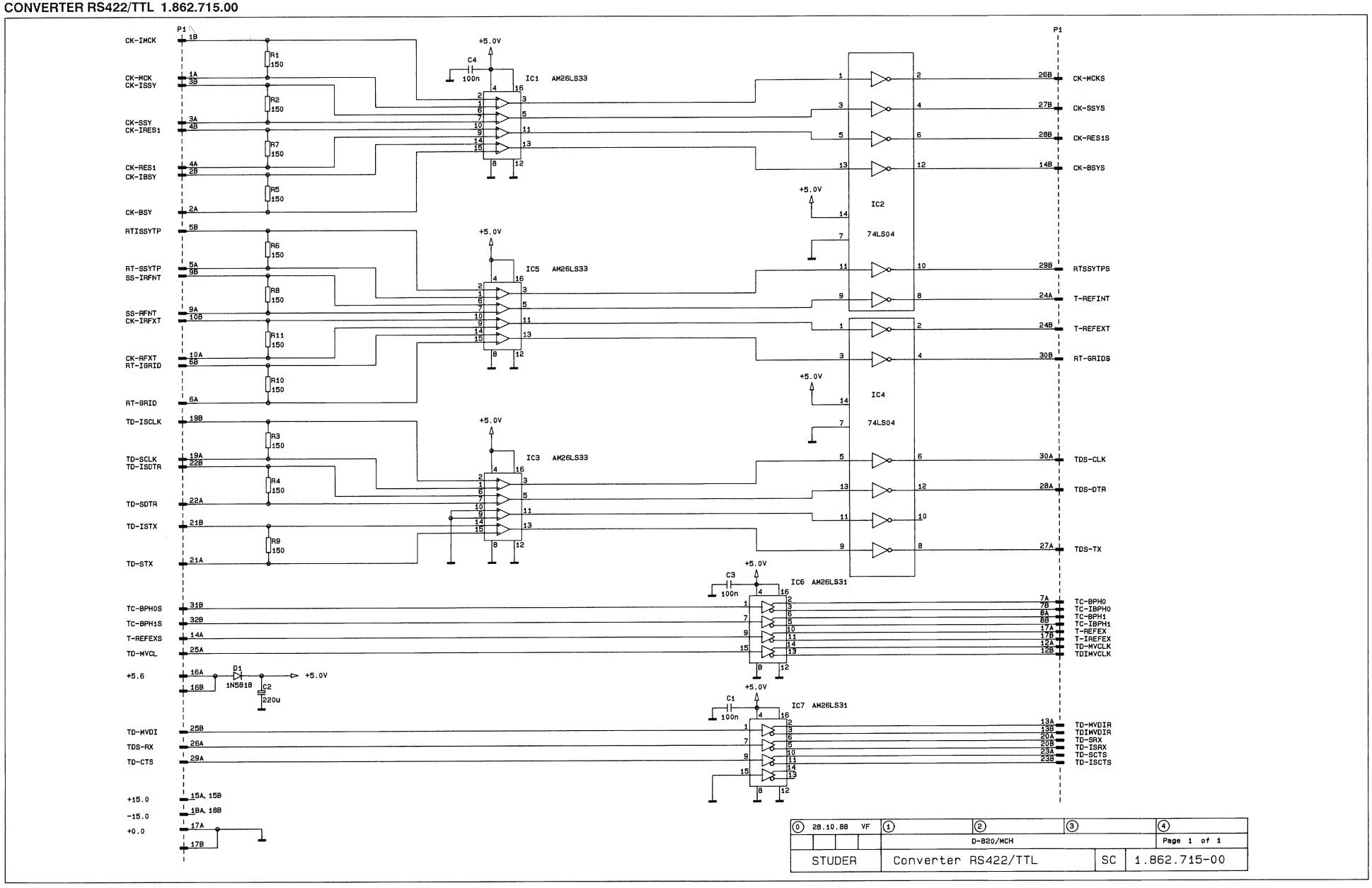

CONVERTER RS422/TTL 1.862.715.00

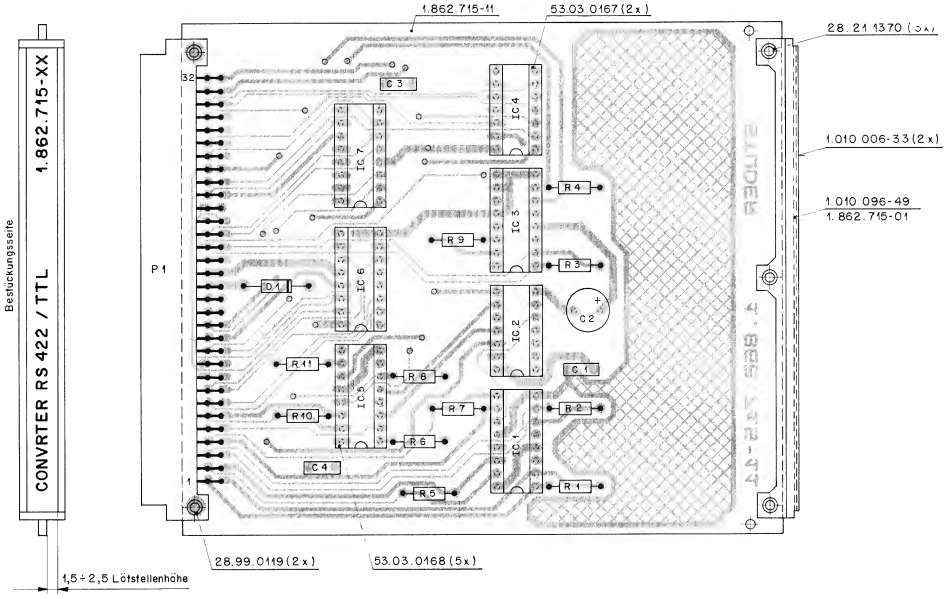

IND.	POS.NO.	PART NO.	VALUE	SPECIFICATIONS / EQUIVALENT	MANUF.
	C.....1	59.06.0104	100 uF	10%, 63V , PETP	
	C.....2	59.41.3221	220 uF	-20%, 10V , El	
	C.....3	59.06.0104	100 uF	10%, 63V , PETP	
	C.....4	59.06.0104	100 uF	10%, 63V , PETP	
	D.....1	50.04.0512	1N 5818	1N 5819	Mot
	IC....1	50.15.0109	AM26LS33CN	AM 26 LS 33 PC	AMD,NS
	IC....2	50.06.0004	74 LS 04PC	.. 74 LS 04 .	Fc,NS,Sig,Ti
	IC....3	50.15.0109	AM26LS33CN	AM 26 LS 33 PC	AMD,NS
	IC....4	50.06.0004	74 LS 04PC	.. 74 LS 04 .	Fc,NS,Sig,Ti
	IC....5	50.15.0109	AM26LS33CN	AM 26 LS 33 PC	AMD,NS
	IC....6	50.15.0108	AM26LS31CN	AM 26 LS 31 PC	AMD,Mot,TI
	IC....7	50.15.0108	AM26LS31CN	AM 26 LS 31 PC	AMD,Mot,TI
	P.....1	54.11.2004	Connector	EURO 2 x 32, PRINT	
	R.....1	57.11.3151	150 Ohm	1%	
	R.....2	57.11.3151	150 Ohm	1%	
	R.....3	57.11.3151	150 Ohm	1%	
	R.....4	57.11.3151	150 Ohm	1%	
	R.....5	57.11.3151	150 Ohm	1%	
	R.....6	57.11.3151	150 Ohm	1%	
	R.....7	57.11.3151	150 Ohm	1%	
	R.....8	57.11.3151	150 Ohm	1%	
	R.....9	57.11.3151	150 Ohm	1%	
	R....10	57.11.3151	150 Ohm	1%	
	R....11	57.11.3151	150 Ohm	1%	

S T U D E R (00) 89/05/10 IVA CONVERTER RS422 / TTL PL 1.862.715.00 PAGE 1

IND.	POS.NO.	PART NO.	VALUE	SPECIFICATIONS / EQUIVALENT	MANUF.

El=Electrolytic, PETP=Polyesterfilm

MANUFACTURER: AMD=Advanced Micro Devices, Fc=Fairchild, Mot=Motorola,
NS=National Semiconductors, Sig=Signetics,
TI=Texas Instruments.

ORIG 89/05/10

S T U D E R (00) 89/05/10 IVA CONVERTER RS422 / TTL PL 1.862.715.00 PAGE 2

DISTRIBUTION BOARD TD 1.862.744.00

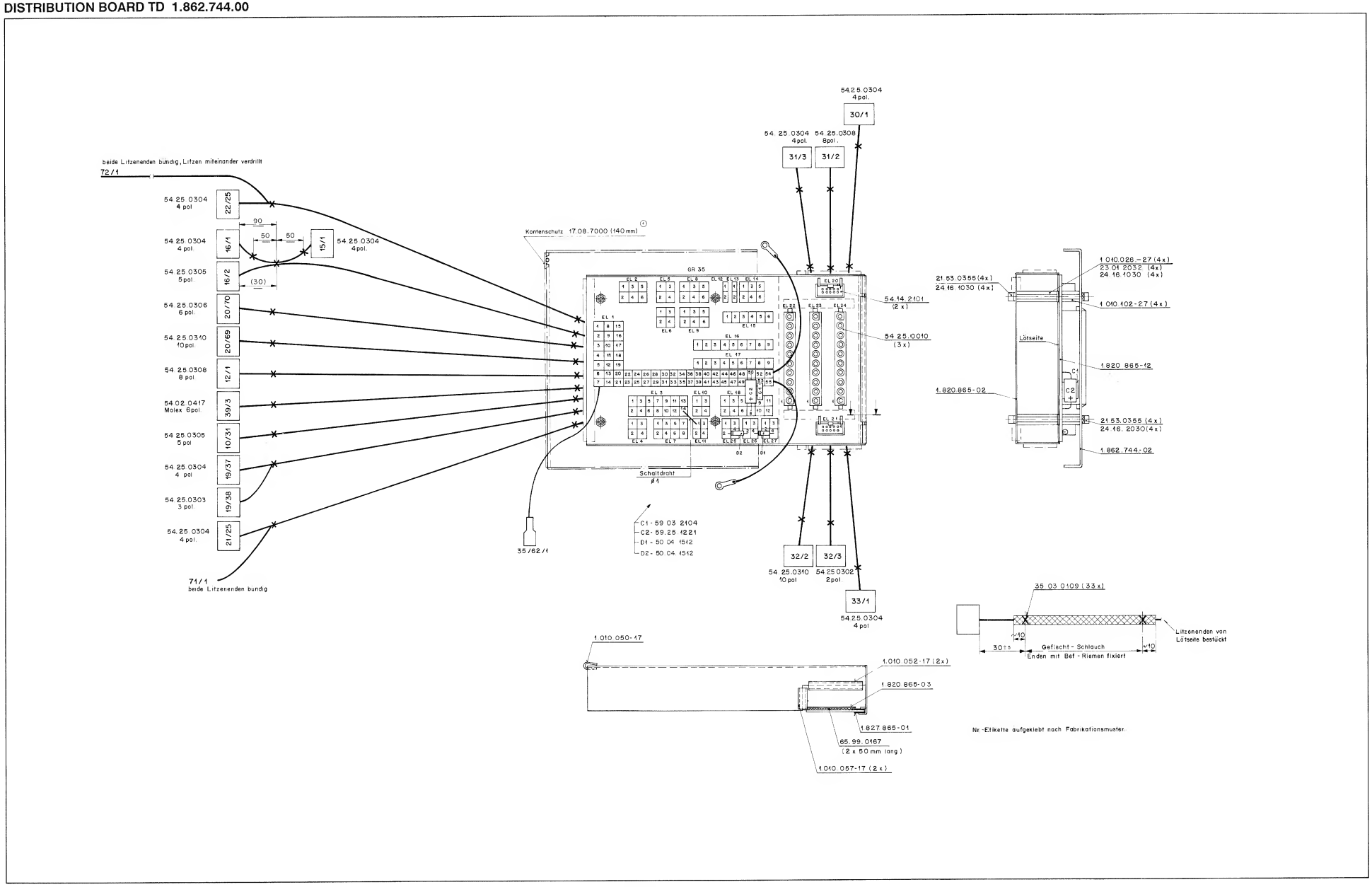

CAPSTAN CONTROL UNIT 1.862.764.20

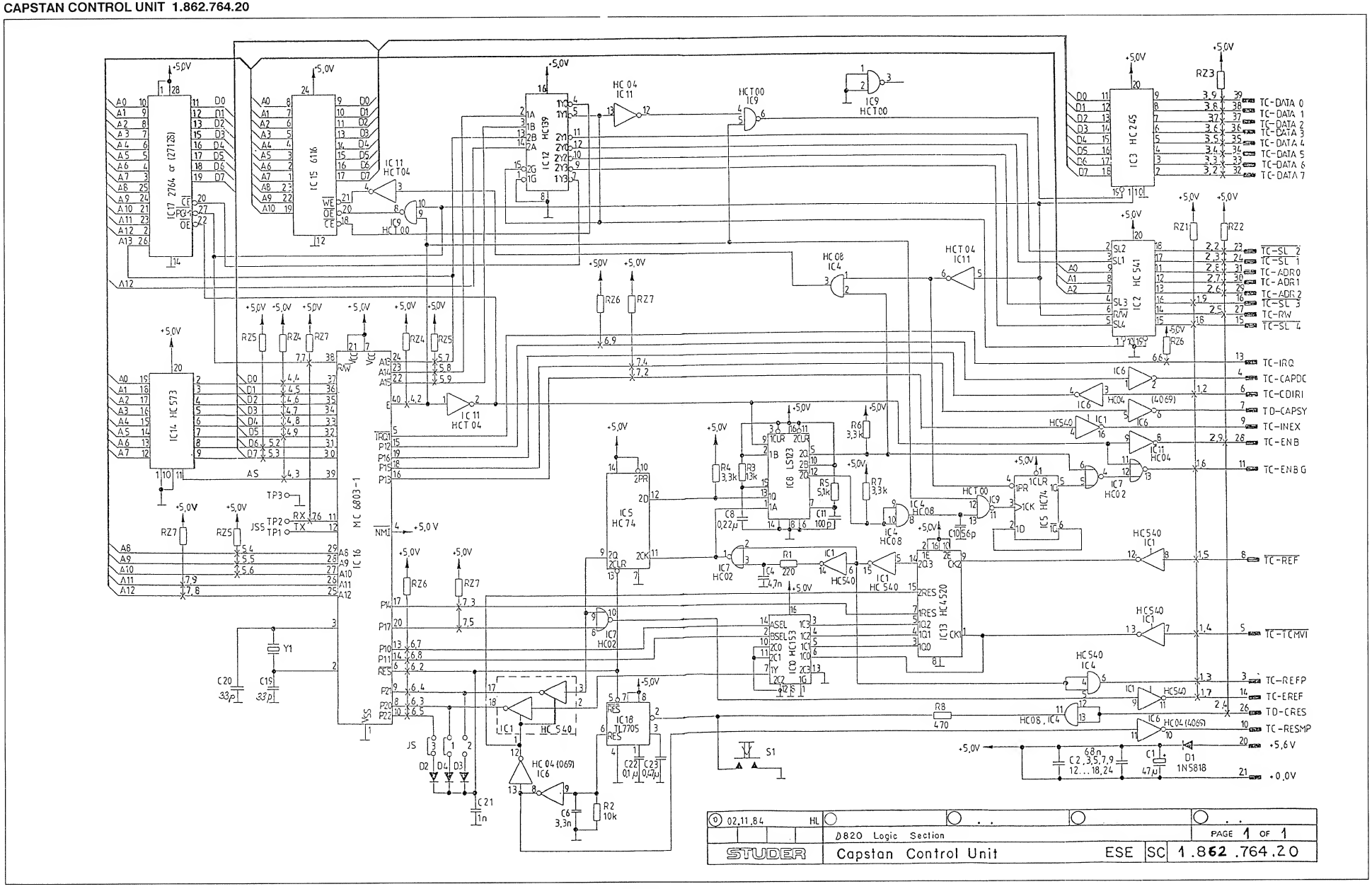

CAPSTAN CONTROL UNIT 1.862.764.20

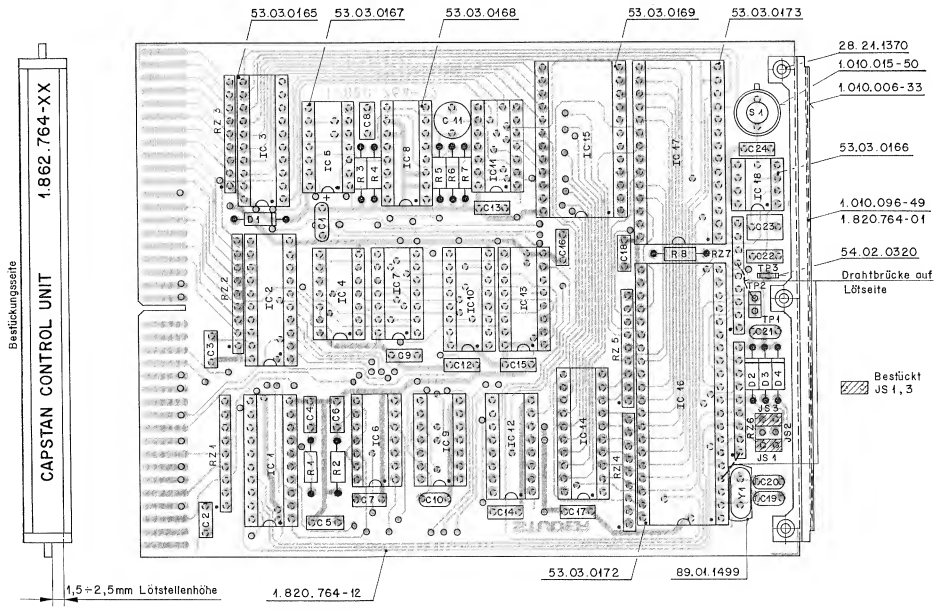

Schilder 43.01.0108
und 1.101.001.XX
aufgeklebt nach
Fabrikationsmuster

IND.	POS.NO.	PART NO.	VALUE	SPECIFICATIONS / EQUIVALENT	MANUF.
	C.....1	59.26.0470	47 uF	20%, 6.3V	Ph
	C.....2	59.06.0683	68 nF	20%	
	C.....3	59.06.0683	68 nF	20%	
	C.....4	59.32.2472	4.7 nF	10%	
	C.....5	59.06.0683	68 nF	20%	
	C.....6	59.32.2332	3.3 nF	10%	
	C.....7	59.06.0683	68 nF	20%	
	C.....8	59.06.5224	220 nF	5%	
	C.....9	59.06.0683	68 nF	20%	
	C....10	59.45.4560	56 pF	10%	
	C....11	59.05.1101	100 pF	1%	
	C....12	59.06.0683	68 nF	20%	
	C....13	59.06.0683	68 nF	20%	
	C....14	59.06.0683	68 nF	20%	
	C....15	59.06.0683	68 nF	20%	
	C....16	59.06.0683	68 nF	20%	
	C....17	59.06.0683	68 nF	20%	
	C....18	59.06.0683	68 nF	20%	
(00)	C....19	59.45.1150	15 pF	5%	
	C....19	59.45.2330	33 pF	5%	
(00)	C....20	59.45.1150	15 pF	5%	
	C....20	59.45.2330	33 pF	5%	
	C....21	59.32.4102	1 nF	20%	
	C....22	59.06.0104	100 nF	10%	
	C....23	59.06.0474	470 nF	10%	
	C....24	59.06.0683	68 nF	20%	
	D.....1	50.04.0512	1N 5818	1N 5819	Mot
	D.....2	50.04.0125	1N 4448		ITT,Ph,Sse,TI
	D.....3	50.04.0125	1N 4448		ITT,Ph,Sse,TI
	D.....4	50.04.0125	1N 4448		ITT,Ph,Sse,TI
	IC....1	50.17.1540	74 HC 540		Ph,Mot,NS,RCA,To,TI
	IC....2	50.17.1541	74 HC 541		Ph,Mot,NS,RCA,To,TI
	IC....3	50.17.1245	74 HC 245		Mot,Ph,RCA,To,TI
	IC....4	50.17.1008	74 HC 08		Ph,Mot,NS,RCA,To,TI
	IC....5	50.17.1074	74 HC 74		Ph,Mot,NS,RCA,To,TI

IND.	POS.NO.	PART NO.	VALUE	SPECIFICATIONS / EQUIVALENT	MANUF.
	IC....6	50.17.1004	74 HC 04		Ph,Mot,NS,RCA,To,TI
	IC....7	50.17.1002	74 HC 02		Ph,Mot,NS,RCA,To,TI
	IC....8	50.06.0123	74 LS 123		Mot,TI
	IC....9	50.17.1000	74 HC 00		Ph,Mot,NS,RCA,To,TI
	IC....10	50.17.1153	74 HC 153		Mot,Ph,RCA,To,TI
	IC....11	50.17.0004	74 HCT 04		Ph,NS,RCA
	IC....12	50.17.1139	74 HC 139		Ph,Mot,NS,RCA,SGS,To,TI
	IC....13	50.07.0520	4520 BPC	HEF 4520	Ph,Fe
	IC....14	50.17.1573	74 HC 573		Ph,Mot,NS,RCA,To,TI
	IC....15	50.14.0107	HM6116LP-3	M5M5128-15	Hi,OKI
	IC....16	50.16.0107	MC6803G-1	HD6803P-L	Hi,Mot
(00)	IC....17	50.14.0125	M 27128AF	1	Fu,Hi,It
(20)	IC....17	1.862.796.20		Software ../.., Capstan PCM MCH	St
	IC....18	50.11.0122	TL7705ACP		TI
	JS....1	54.01.0020	Connector	Jumper unit see note 2	
	JS....2	54.01.0020	Connector	Jumper unit see note 2	
	JS....3	54.01.0020	Connector	Jumper unit see note 2	
	TP....1	54.01.0020	Connector	1 contact	
	TP....2	54.01.0020	Connector	1 contact	
	TP....3	54.02.0320	Connector	1 contact, flat	
	R.....1	57.11.4221	220 Ohm	2%	
	R.....2	57.11.4103	10 kOhm	10%	
	R.....3	57.11.3133	13 kOhm	2%	
	R.....4	57.11.4332	3.3 kOhm	10%	
	R.....5	57.11.3512	5.1 kOhm	2%	
	R.....6	57.11.4332	3.3 kOhm	10%	
	R.....7	57.11.4332	3.3 kOhm	10%	
	R.....8	57.11.4471	470 Ohm	10%	
	RZ....1	57.88.4103		Network 8 x 10 kOhm (old part 1.010.014.57)	
	RZ....2	57.88.4103		Network 8 x 10 kOhm (old part 1.010.014.57)	
	RZ....3	57.88.4103		Network 8 x 10 kOhm (old part 1.010.014.57)	
	RZ....4	57.88.4332		Network 8 x 3.3 kOhm	
	RZ....5	57.88.4332		Network 8 x 3.3 kOhm	

IND.	POS.NO.	PART NO.	VALUE	SPECIFICATIONS / EQUIVALENT	MANUF.
	RZ....6	57.88.4103		Network 8 x 10 kOhm (old part 1.010.014.57)	
	RZ....7	57.88.4332		Network 8 x 3.3 kOhm	
	S.....1	55.03.0122		Switch impuls, see note 3	
(00)	Y.....1	89.01.0553		4.9152 MHz, TD18	
	Y.....1	89.01.0560		4.9152 MHz, +- 20 ppm.	

(20) 12.01.90 Software ../..

Note 1 - IC 17 for Software ../.. and future versions:

	Studer	50.14.0125
	Fujitsu	MBM 27128-30
	Hitachi	HN 4827128 G-25/HN 4827128 G-30
	Intel	27128 250ns

Note 2 - JS1 - JS3 2x Contact pin 54.01.0020

Contact pin:	Studer	54.01.0020
	Berg	75 160-102-36
	Philips	2422 025 89303
Bridge:	Studer	54.01.0021
	Berg	65 474-001
	Philips	2422 024 98003

Note 3 - Switch impuls: Chicago Switch 34-530-001

MANUFACTURER: Fe=Fairchild, ITT=Intermetall, Hi=Hitachi,
Mot=Motorola, NS=National Semiconductors,
OKI=OKI Semiconductors, Ph=Philips,
RCA=Radio Corporation of America, Sse=Seesoesen,
SGS=SES-ktes, St=Studer, TI=Texas Instruments,
To=Toshiba.

ORIG 90/01/12 (20) 90/01/12

PUSHBUTTON/DISPLAY BOARD 1.862.767.00

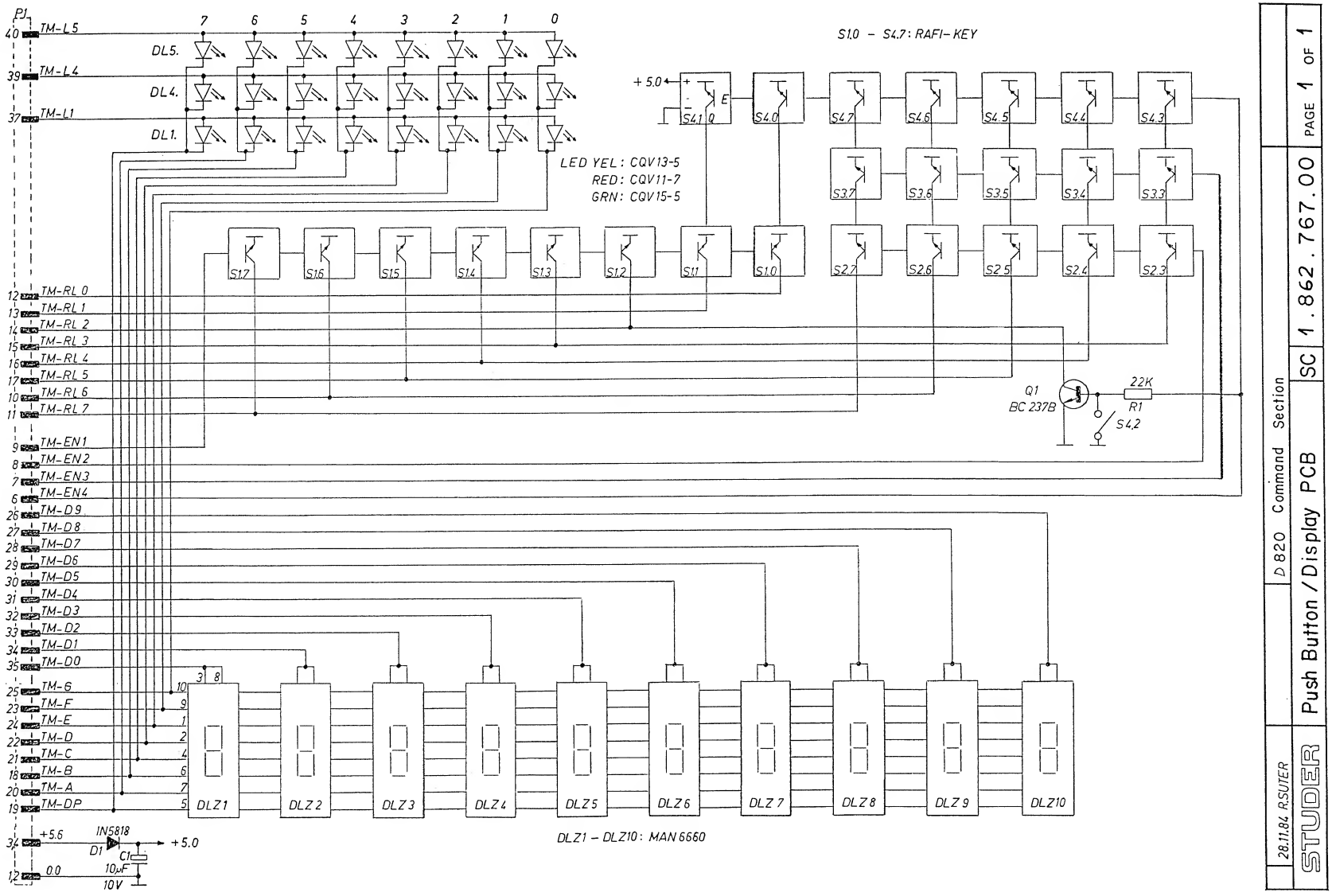

PUSHBUTTON/DISPLAY BOARD 1.862.767.00

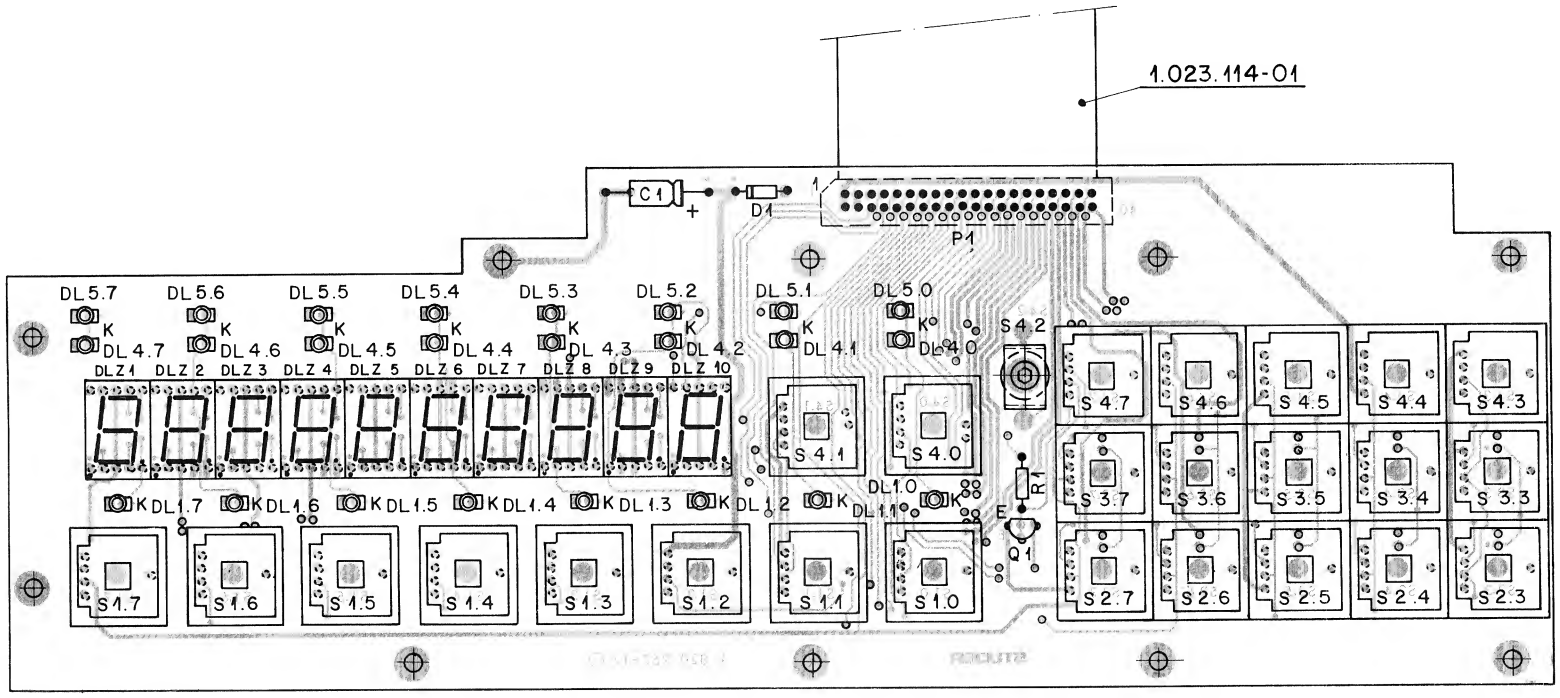

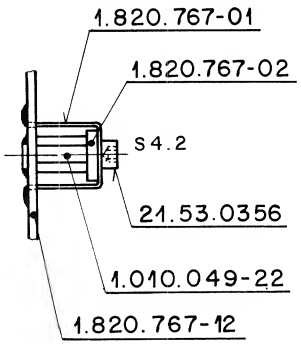

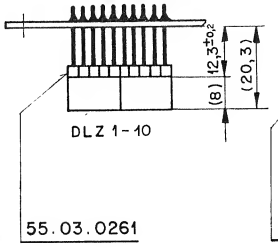

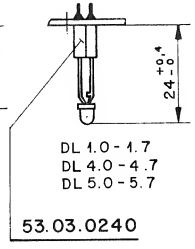

IND.	POS.NO.	PART NO.	VALUE	SPECIFICATIONS / EQUIVALENT	MANUF.
	C.....1	59.25.4100	10 uF	-20%, 25V, El	
	D.....1	50.04.0512	1N 5818	1N 5819	Mot
	DL..1.0	50.04.2130	CQV 13-7	LED, Yellow	Sie
	DL..1.1	50.04.2130	CQV 13-7	LED, Yellow	Sie
	DL..1.2	50.04.2130	CQV 13-7	LED, Yellow	Sie
	DL..1.3	50.04.2130	CQV 13-7	LED, Yellow	Sie
	DL..1.4	50.04.2130	CQV 13-7	LED, Yellow	Sie
	DL..1.5	50.04.2130	CQV 13-7	LED, Yellow	Sie
	DL..1.6	50.04.2130	CQV 13-7	LED, Yellow	Sie
	DL..1.7	50.04.2130	CQV 13-7	LED, Yellow	Sie
	DL..4.0	50.04.2129	CQV 13-7	LED, Red	Sie
	DL..4.1	50.04.2131	CQV 13-7	LED, Green, CQV 15-6	Sie
	DL..4.2	50.04.2130	CQV 13-7	LED, Yellow	Sie
	DL..4.3	50.04.2129	CQV 13-7	LED, Red	Sie
	DL..4.4	50.04.2129	CQV 15-5	LED, Red	Sie
	DL..4.5	50.04.2130	CQV 11-7	LED, Yellow	Sie
	DL..4.6	50.04.2130	CQV 13-7	LED, Yellow	Sie
	DL..4.7	50.04.2130	CQV 15-5	LED, Yellow	Sie
	DL..5.0	50.04.2129	CQV 13-7	LED, Red	Sie
	DL..5.1	50.04.2131	CQV 11-7	LED, Green, CQV 15-6	Sie
	DL..5.2	50.04.2130	CQV 13-7	LED, Yellow	Sie
	DL..5.3	50.04.2130	CQV 13-7	LED, Yellow	Sie
	DL..5.4	50.04.2130	CQV 13-7	LED, Yellow	Sie
	DL..5.5	50.04.2129	CQV 13-7	LED, Red	Sie
	DL..5.6	50.04.2129	CQV 13-7	LED, Red	Sie
	DL..5.7	50.04.2130	CQV 13-7	LED, Yellow	Sie
	DLZ...1	73.01.0124	MAN 6660	7-Segments, Red, Brightness "G"	GI
	DLZ...2	73.01.0124	MAN 6660	7-Segments, Red, Brightness "G"	GI
	DLZ...3	73.01.0124	MAN 6660	7-Segments, Red, Brightness "G"	GI
	DLZ...4	73.01.0124	MAN 6660	7-Segments, Red, Brightness "G"	GI
	DLZ...5	73.01.0124	MAN 6660	7-Segments, Red, Brightness "G"	GI
	DLZ...6	73.01.0124	MAN 6660	7-Segments, Red, Brightness "G"	GI
	DLZ...7	73.01.0124	MAN 6660	7-Segments, Red, Brightness "G"	GI
	DLZ...8	73.01.0124	MAN 6660	7-Segments, Red, Brightness "G"	GI

S T U D E R (00) 89/09/11 VF PUSHBUTTON DISPLAY BOARD PL 1.862.767.00 PAGE 1

IND.	POS.NO.	PART NO.	VALUE	SPECIFICATIONS / EQUIVALENT	MANUF.
	DLZ...9	73.01.0124	MAN 6660	7-Segments, Red, Brightness "G"	GI
	DLZ..10	73.01.0124	MAN 6660	7-Segments, Red, Brightness "G"	GI
	P.....1	1.023.114.01		Flat cable 40 pole, see note 1	St
	Q.....1	50.03.0436	BC 237 B	BC 547 B, BC 550 B	ITT,Mot,Ph,Sie
	R.....1	57.11.4223	22 kOhm	2%	
	S...1.0	55.03.0261	TTL-switch	1 * OC, Rafi Nr. 3.13001.110	
	S...1.1	55.03.0261	TTL-switch	1 * OC, Rafi Nr. 3.13001.110	
	S...1.2	55.03.0261	TTL-switch	1 * OC, Rafi Nr. 3.13001.110	
	S...1.3	55.03.0261	TTL-switch	1 * OC, Rafi Nr. 3.13001.110	
	S...1.4	55.03.0261	TTL-switch	1 * OC, Rafi Nr. 3.13001.110	
	S...1.5	55.03.0261	TTL-switch	1 * OC, Rafi Nr. 3.13001.110	
	S...1.6	55.03.0261	TTL-switch	1 * OC, Rafi Nr. 3.13001.110	
	S...1.7	55.03.0261	TTL-switch	1 * OC, Rafi Nr. 3.13001.110	
	S...2.3	55.03.0261	TTL-switch	1 * OC, Rafi Nr. 3.13001.110	
	S...2.4	55.03.0261	TTL-switch	1 * OC, Rafi Nr. 3.13001.110	
	S...2.5	55.03.0261	TTL-switch	1 * OC, Rafi Nr. 3.13001.110	
	S...2.6	55.03.0261	TTL-switch	1 * OC, Rafi Nr. 3.13001.110	
	S...2.7	55.03.0261	TTL-switch	1 * OC, Rafi Nr. 3.13001.110	
	S...3.3	55.03.0261	TTL-switch	1 * OC, Rafi Nr. 3.13001.110	
	S...3.4	55.03.0261	TTL-switch	1 * OC, Rafi Nr. 3.13001.110	
	S...3.5	55.03.0261	TTL-switch	1 * OC, Rafi Nr. 3.13001.110	
	S...3.6	55.03.0261	TTL-switch	1 * OC, Rafi Nr. 3.13001.110	
	S...3.7	55.03.0261	TTL-switch	1 * OC, Rafi Nr. 3.13001.110	
	S...4.0	55.03.0261	TTL-switch	1 * OC, Rafi Nr. 3.13001.110	
	S...4.1	55.03.0261	TTL-switch	1 * OC, Rafi Nr. 3.13001.110	
	S..s4.2	1.820.767.01		Contact bow	
	S..s4.2	1.820.767.02		Insulator Sleeve	
	S..s4.2	1.010.049.22		Rivet nut	
	S..s4.2	21.53.0371		Screw , M 3 x 14	
	S...4.3	55.03.0261	TTL-switch	1 * OC, Rafi Nr. 3.13001.110	
	S...4.4	55.03.0261	TTL-switch	1 * OC, Rafi Nr. 3.13001.110	
	S...4.5	55.03.0261	TTL-switch	1 * OC, Rafi Nr. 3.13001.110	
	S...4.6	55.03.0261	TTL-switch	1 * OC, Rafi Nr. 3.13001.110	

S T U D E R (00) 89/09/11 VF PUSHBUTTON DISPLAY BOARD PL 1.862.767.00 PAGE 2

IND.	POS.NO.	PART NO.	VALUE	SPECIFICATIONS / EQUIVALENT	MANUF.
	S...4.7	55.03.0261	TTL-switch	1 * OC, Rafi Nr. 3.13001.110	

Note 1 - Flat cable: Studer Nr. 64.03.0216
PCB Transition Header: Studer Nr. 54.14.5027
Yamaichi Nr. FSF-40-02
Burndy Nr. BFDOS 40 R006S
Socket Type: Studer Nr. 54.14.5023
Yamaichi Nr. FAS-40-17
Burndy Nr. FRS-40 BD-7P

El=Electrolytic

MANUFACTURERS: GI=General Instruments, ITT=Intermetall, Mot=Motorola,
Ph=Philips, Sie=Siemens, St=Studer.

ORIG 89/09/11

S T U D E R (00) 89/09/11 VF PUSHBUTTON DISPLAY BOARD PL 1.862.767.00 PAGE 3

MPU TAPE DECK CONTROL 1.862.781.20

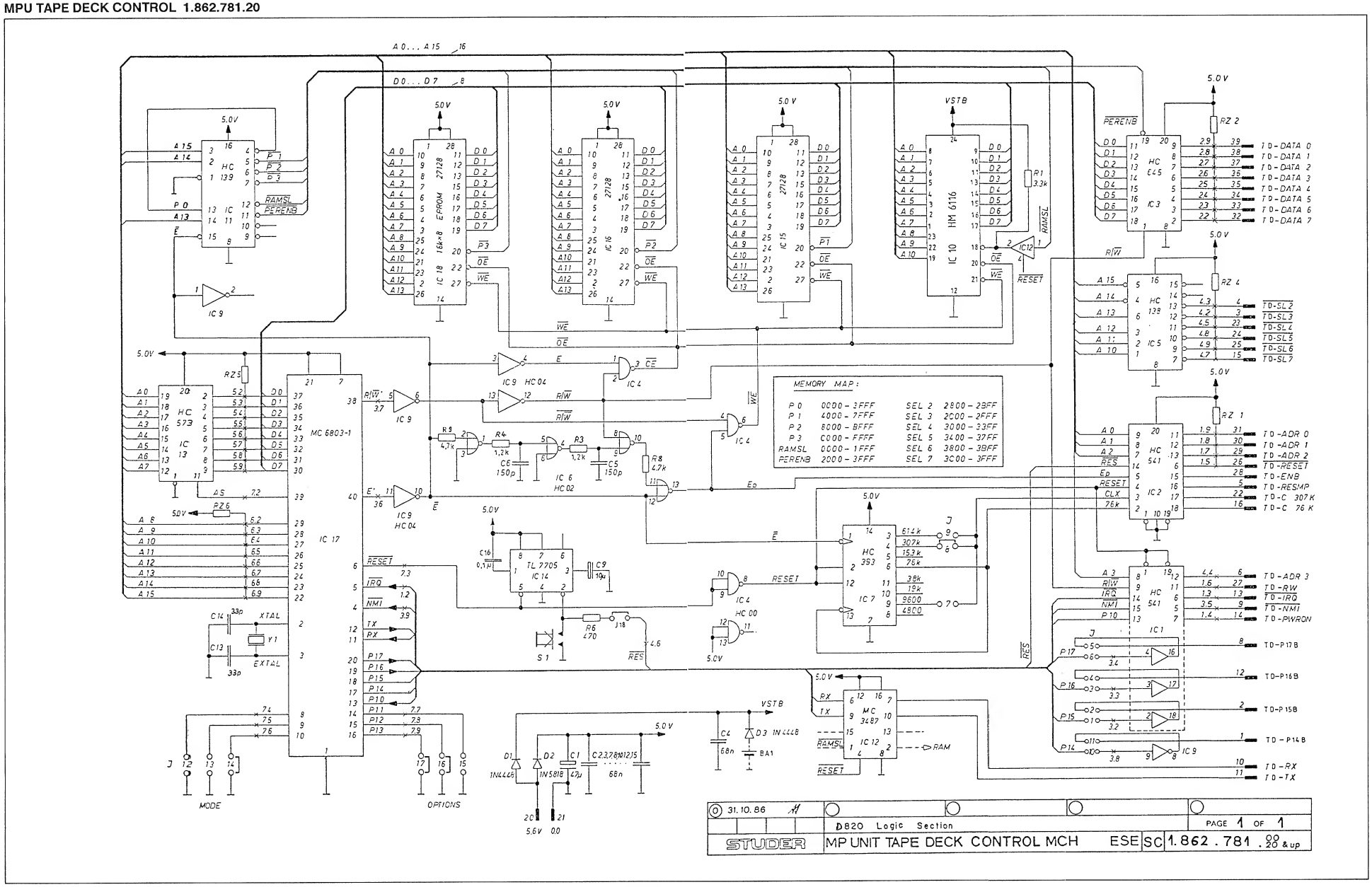

MPU TAPE DECK CONTROL 1.862.781.20

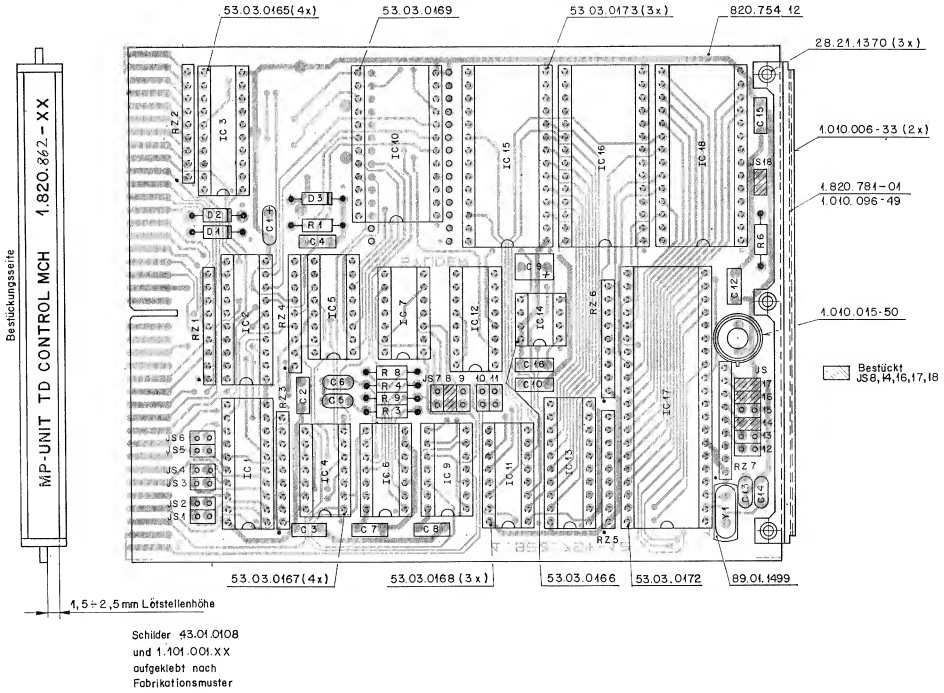

Schilder 43.01.0108
und 1.101.001.XX
aufgeklebt nach
Fabrikationsmuster

IND.	POS.NO.	PART NO.	VALUE	SPECIFICATIONS / EQUIVALENT	MANUF.
	C.....1	59.26.0470	47 uF	20%, 6.3V , Sal	Ph
	C.....2	59.06.0683	68 nF	10%, 63V , PETP	
	C.....3	59.06.0683	68 nF	10%, 63V , PETP	
	C.....4	59.06.0683	68 nF	10%, 63V , PETP	
	C.....5	59.34.7151	150 pF	2%, Ce	
	C.....6	59.34.7151	150 pF	2%, Ce	
	C.....7	59.06.0683	68 nF	10%, 63V , PETP	
	C.....8	59.06.0683	68 nF	10%, 63V , PETP	
	C.....9	59.26.2100	10 uF	20%, 16V , Sal	
	C.....10	59.06.0683	68 nF	10%, 63V , PETP	
	C.....11		not used		
	C.....12	59.06.0683	68 nF	10%, 63V , PETP	
	C.....13	59.34.2330	33 pF	5%, Ce	
	C.....14	59.34.2330	33 pF	5%, Ce	
	C.....15	59.06.0683	68 nF	10%, 63V , PETP	
	C.....16	59.06.0104	100 nF	10%, 63V , PETP	
	D.....1	50.04.0125	1N 4448		Fc,ITT,Ph,Sem,Tf
	D.....2	50.04.0512	1N 5818	1N 5819	Mot
	D.....3	50.04.0125	1N 4448		Fc,ITT,Ph,Sem,Tf
	IC....1	50.17.1541	74 HC 541		Mot,NS,Ph,RCA,SGS,TI,To
	IC....2	50.17.1541	74 HC 541		Mot,NS,Ph,RCA,SGS,TI,To
	IC....3	50.17.1645	74 HC 645		Mot,NS,Ph,RCA,SGS,TI,To
	IC....4	50.17.1000	74 HC 00		Mot,NS,Ph,RCA,SGS,TI,To
	IC....5	50.17.1138	74 HC 138		Mot,NS,Ph,RCA,SGS,TI,To
	IC....6	50.17.1002	74 HC 02		Mot,NS,Ph,RCA,SGS,TI,To
	IC....7	50.17.1393	74 HC 393		Mot,NS,Ph,RCA,SGS,TI,To
	IC....8		not used		
	IC....9	50.17.0004	74 HCT 04		Mot,NS,Ph,RCA,SGS,TI,To
	IC...10	50.14.0107	HM6116LP-4	MSM 5128-15	Hi,OKI
	IC...11	50.17.1139	74 HC 139		Mot,NS,Ph,RCA,SGS,TI,To
	IC...12	50.15.0105	MC 3487 P	DS 3487 N	Mot,NS
	IC...13	50.17.1573	74 HC 573		Mot,NS,Ph,RCA,SGS,TI,To
	IC...14	50.11.0122	TL7705ACP		TI
	IC...15		not used		
(00)	IC...16	50.14.0125	27128	HN 48271286-30	Hi,It

IND.	POS.NO.	PART NO.	VALUE	SPECIFICATIONS / EQUIVALENT	MANUF.
(20)	IC...16	1.862.797.20		Software TD PCM MCH	St
	IC...17	50.16.0107	MC6803P-1	6803P-L	Mot,Hi
(00)	IC...18	50.14.0125	27128	HN 48271286-30	Hi,It
(20)	IC...18	1.862.797.20		Software TD PCM MCH	St
	JS....1			see note 2	
	JS....2			see note 2	
	JS....3			see note 2	
	JS....4			see note 2	
	JS....5			see note 2	
	JS....6			see note 2	
	JS....7			see note 2	
	JS....8			see note 2	
	JS....9			see note 2	
	JS...10			see note 2	
	JS...11			see note 2	
	JS...12			see note 2	
	JS...13			see note 2	
	JS...14			see note 2	
	JS...15			see note 2	
	JS...16			see note 2	
	JS...17			see note 2	
	JS...18			see note 2	
	R.....1	57.11.4332	3.3 kOhm	2%	
	R.....2		not used		
	R.....3	57.11.4122	1.2 kOhm	2%	
	R.....4	57.11.4122	1.2 kOhm	2%	
	R.....5		not used		
	R.....6	57.11.4471	470 Ohm	2%	
	R.....7		not used		
	R.....8	57.11.4472	4.7 kOhm	2%	
	R.....9	57.11.4472	4.7 kOhm	2%	
	RZ....1	57.88.4332		see note 3	
	RZ....2	57.88.4332		see note 3	
	RZ....3	57.88.4332		see note 3	

IND.	POS.NO.	PART NO.	VALUE	SPECIFICATIONS / EQUIVALENT	MANUF.
	RZ....4	57.88.4332		see note 3	
	RZ....5	57.88.4332		see note 3	
	RZ....6	57.88.4332		see note 3	
	RZ....7	57.88.4332		see note 3	
	S.....1	55.03.0122		Chicago Switch 34-550-001	
	Y.....1	89.01.0560		4.9152 MHz, +-100 ppm	

Note 1 - IC15/16/18 : Software is delivered in a set only.

Note 2 - Contact pin: Studer Nr. 54.01.0020
Berg Nr. 75 160-102-36
Philips Nr. 2422 025 89303
Bridge: Studer Nr. 54.01.0021
Berg Nr. 65 474-001
Philips Nr. 2422 024 88003

Note 3 - Network: 8 * 3.3 kOhm, 5%
Siemens Nr. C09 x 3.3 k J
Ineltro Nr. 888 3.3 k 5%

Ce=Ceramic, Sal=Solid Aluminium, PETP=Polyesterfilm.

MANUFACTURER: Fc=Fairchild, Hi=Hitachi, ITT=Intermetall, Mot=Motorola,
NS=National Semiconductors, OK=OKI, Ph=Philips,
Sem=Semicoem, Tf=Telefunken,TI=Texas Instruments.

ORIG 89/07/18 (20) 89/07/18

CR AUX KEYS 1.328.601.00

FUNCTIONAL PARTS ASSIGNMENT			
FUNCTION	LED		KEY
NAME	NR	COLOR	NR
ALL		YELLOW	S03
ALL READY	DL01	GREEN	S01
ALL SAFE	DL02	YELLOW	S02
ALL INPUT	DL03	YELLOW	S04
ALL REPRO	DL04	YELLOW	S05
CUE1			S06
CUE2			S07
TC			S08
CUE1/REC	DL05	RED	
CUE1/AREC	DL06	GREEN	
CUE1/READ	DL07	GREEN	
CUE1/SAFE	DL08	YELLOW	
CUE2/REC	DL09	RED	
CUE2/AREC	DL10	GREEN	
CUE2/READ	DL11	GREEN	
CUE2/SAFE	DL12	YELLOW	
TC/REC	DL13	RED	
TC/READY	DL14	GREEN	
TC/SAFE	DL15	YELLOW	
RT/REC	DL16	RED	
GROUP1	DL19	YELLOW	S10
GROUP2	DL20	YELLOW	S11
GROUP3	DL21	YELLOW	S12
GROUP4	DL22	YELLOW	S13
SET	DL23	YELLOW	S14
SETUP1	DL24	YELLOW	S15
SETUP2	DL25	YELLOW	S16
SETUP3	DL26	YELLOW	S17
SETUP4	DL27	YELLOW	S18
STORE	DL28	YELLOW	S19
USER1	DL29	YELLOW	S20
USER2	DL30	YELLOW	S21
USER3	DL31	YELLOW	S22
USER4	DL32	YELLOW	S23
PING PONG	DL34	YELLOW	S25
MAST SAFE	DL35	YELLOW	S26
AUTO INP	DL37	YELLOW	S28
AUTO MUTE	DL38	YELLOW	S29
EMPH IND	DL39	YELLOW	S30
EMPH ALL	DL40	YELLOW	S31
CH ON	DL42	YELLOW	S33
CH OFF	DL43	YELLOW	S34

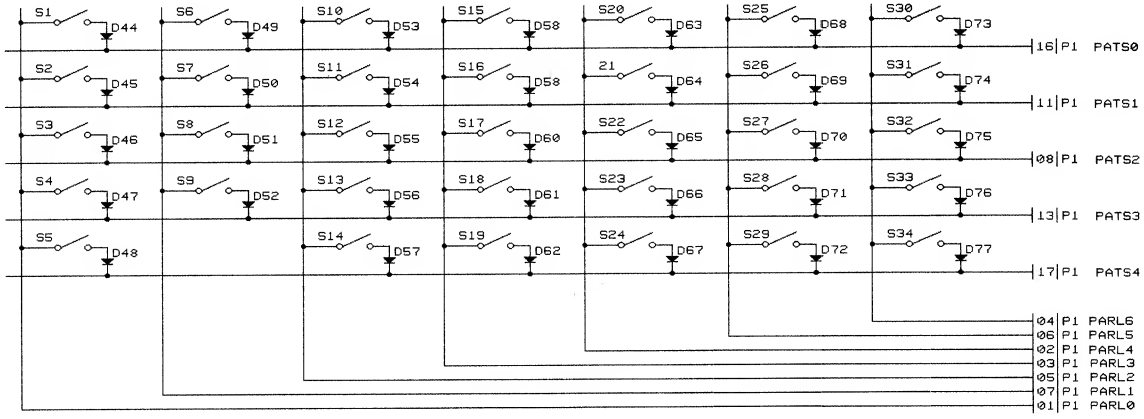

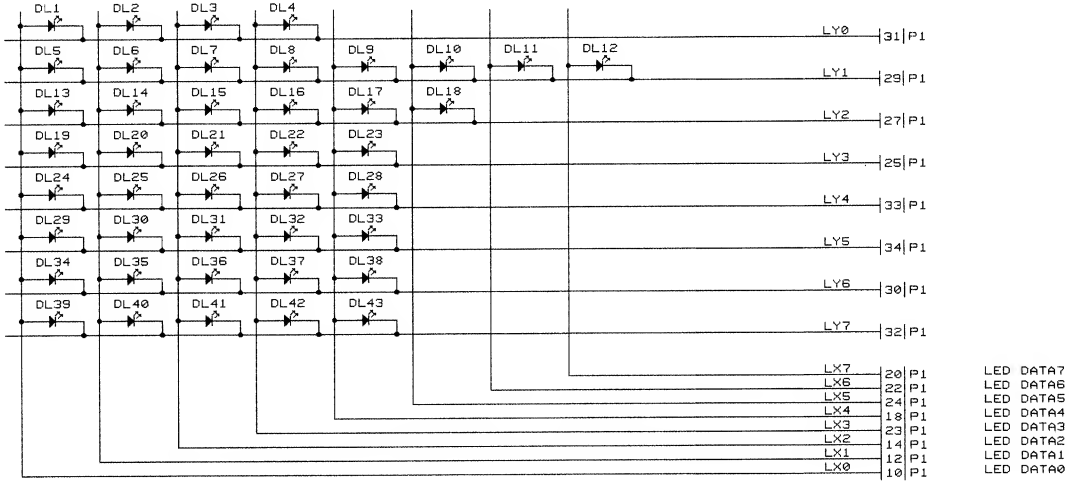

0 24.01.89/MB	1 27.04.89/SO		PAGE 1 OF 1
	D820MCH CHANNEL REMOTE		
STUDER	CR AUXILIARY KEYS	SC	1.328.601-00

CR AUX KEYS 1.328.601.00

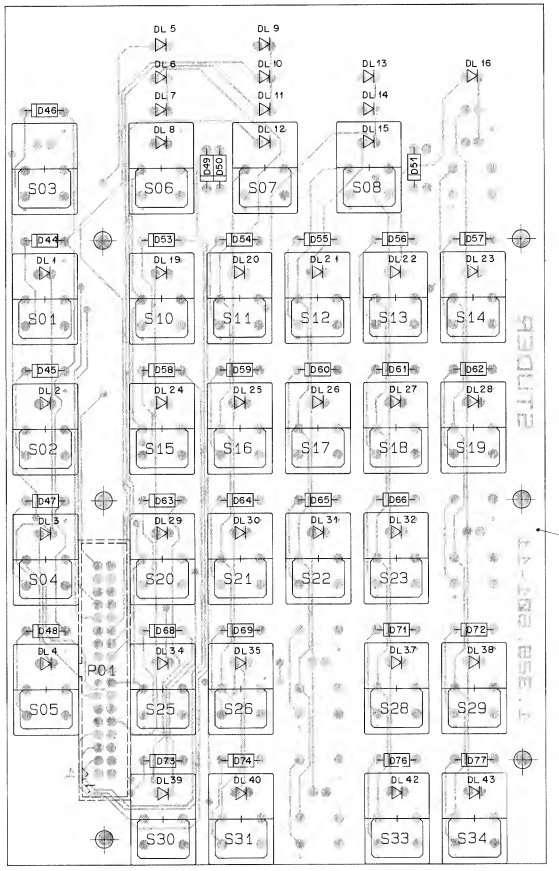

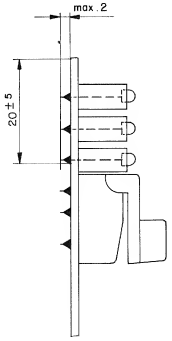

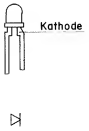

MP 35

LED - Abstandhalter nach PL bestückt.
zB. XDL 5 = LED - Abstandhalter von DL 5

Tasten - Knöpfe nach PL bestückt.
zB. MP 1 = Tasten - Knopf von S1

Etikette MP 36
aufgeklebt nach Fabrikationsmuster.

IND.	POS.NO.	PART NO.	VALUE	SPECIFICATIONS / EQUIVALENT	MANUF.
	D....44	50.04.0125	1N 4448		ANY
	D....45	50.04.0125	1N 4448		ANY
	D....46	50.04.0125	1N 4448		ANY
	D....47	50.04.0125	1N 4448		ANY
	D....48	50.04.0125	1N 4448		ANY
	D....49	50.04.0125	1N 4448		ANY
	D....50	50.04.0125	1N 4448		ANY
	D....51	50.04.0125	1N 4448		ANY
	D....53	50.04.0125	1N 4448		ANY
	D....54	50.04.0125	1N 4448		ANY
	D....55	50.04.0125	1N 4448		ANY
	D....56	50.04.0125	1N 4448		ANY
	D....57	50.04.0125	1N 4448		ANY
	D....58	50.04.0125	1N 4448		ANY
	D....59	50.04.0125	1N 4448		ANY
	D....60	50.04.0125	1N 4448		ANY
	D....61	50.04.0125	1N 4448		ANY
	D....62	50.04.0125	1N 4448		ANY
	D....63	50.04.0125	1N 4448		ANY
	D....64	50.04.0125	1N 4448		ANY
	D....65	50.04.0125	1N 4448		ANY
	D....66	50.04.0125	1N 4448		ANY
	D....68	50.04.0125	1N 4448		ANY
	D....69	50.04.0125	1N 4448		ANY
	D....71	50.04.0125	1N 4448		ANY
	D....72	50.04.0125	1N 4448		ANY
	D....73	50.04.0125	1N 4448		ANY
	D....74	50.04.0125	1N 4448		ANY
	D....76	50.04.0125	1N 4448		ANY
	D....77	50.04.0125	1N 4448		ANY
	DL...1	50.04.2162		HLMP 1540 GN KLAR	ANY
	DL...2	50.04.2152		HLMP 1440 GB KLAR	ANY
	DL...3	50.04.2152		HLMP 1440 GB KLAR	ANY
	DL...4	50.04.2152		HLMP 1440 GB KLAR	ANY
	DL...5	50.04.2129		LS 3160 RT DIFF	ANY
	DL...6	50.04.2162		HLMP 1540 GN KLAR	ANY

S T U D E R (01) 90/09/06 LAR CR AUXILIARY KEYS PL 1.328.601.00 PAGE 1

IND.	POS.NO.	PART NO.	VALUE	SPECIFICATIONS / EQUIVALENT	MANUF.
	DL...7	50.04.2162		HLMP 1540 GN KLAR	ANY
	DL...8	50.04.2152		HLMP 1440 GB KLAR	ANY
	DL...9	50.04.2129		LS 3160 RT DIFF	ANY
	DL...10	50.04.2162		HLMP 1540 GN KLAR	ANY
	DL...11	50.04.2162		HLMP 1540 GN KLAR	ANY
	DL...12	50.04.2152		HLMP 1440 GB KLAR	ANY
	DL...13	50.04.2129		LS 3160 RT DIFF	ANY
	DL...14	50.04.2162		HLMP 1540 GN KLAR	ANY
	DL...15	50.04.2152		HLMP 1440 GB KLAR	ANY
	DL...16	50.04.2129		LS 3160 RT DIFF	ANY
	DL...19	50.04.2152		HLMP 1440 GB KLAR	ANY
	DL...20	50.04.2152		HLMP 1440 GB KLAR	ANY
	DL...21	50.04.2152		HLMP 1440 GB KLAR	ANY
	DL...22	50.04.2152		HLMP 1440 GB KLAR	ANY
	DL...23	50.04.2152		HLMP 1440 GB KLAR	ANY
	DL...24	50.04.2152		HLMP 1440 GB KLAR	ANY
	DL...25	50.04.2152		HLMP 1440 GB KLAR	ANY
	DL...26	50.04.2152		HLMP 1440 GB KLAR	ANY
	DL...27	50.04.2152		HLMP 1440 GB KLAR	ANY
	DL...28	50.04.2152		HLMP 1440 GB KLAR	ANY
	DL...29	50.04.2152		HLMP 1440 GB KLAR	ANY
	DL...30	50.04.2152		HLMP 1440 GB KLAR	ANY
	DL...31	50.04.2152		HLMP 1440 GB KLAR	ANY
	DL...32	50.04.2152		HLMP 1440 GB KLAR	ANY
	DL...34	50.04.2152		HLMP 1440 GB KLAR	ANY
	DL...35	50.04.2152		HLMP 1440 GB KLAR	ANY
	DL...37	50.04.2152		HLMP 1440 GB KLAR	ANY
	DL...38	50.04.2152		HLMP 1440 GB KLAR	ANY
	DL...39	50.04.2152		HLMP 1440 GB KLAR	ANY
	DL...40	50.04.2152		HLMP 1440 GB KLAR	ANY
	DL...42	50.04.2152		HLMP 1440 GB KLAR	ANY
	DL...43	50.04.2152		HLMP 1440 GB KLAR	ANY
(00)	MP....1	55.15.0510		KNOPF HOCH, SW, ZU 0501	ANY
(01)	MP....1	55.15.0515		KNOPF HOCH, GN, ZU 0501	ANY
	MP....2	55.15.0510		KNOPF HOCH, SW, ZU 0501	ANY
	MP....3	55.15.0510		KNOPF HOCH, SW, ZU 0501	ANY

S T U D E R (01) 90/09/06 LAR CR AUXILIARY KEYS PL 1.328.601.00 PAGE 2

IND.	POS.NO.	PART NO.	VALUE	SPECIFICATIONS / EQUIVALENT	MANUF.
(00)	MP....4	55.15.0510		KNOPF HOCH, SW, ZU 0501	ANY
(01)	MP....4	55.15.0516		KNOPF HOCH, BL, ZU 0501	ANY
(00)	MP....5	55.15.0510		KNOPF HOCH, SW, ZU 0501	ANY
(01)	MP....5	55.15.0519		KNOPF HOCH, WS, ZU 0501	ANY
	MP....6	55.15.0510		KNOPF HOCH, SW, ZU 0501	ANY
	MP....7	55.15.0510		KNOPF HOCH, SW, ZU 0501	ANY
	MP....8	55.15.0510		KNOPF HOCH, SW, ZU 0501	ANY
	MP...10	55.15.0510		KNOPF HOCH, SW, ZU 0501	ANY
	MP...11	55.15.0510		KNOPF HOCH, SW, ZU 0501	ANY
	MP...12	55.15.0510		KNOPF HOCH, SW, ZU 0501	ANY
	MP...13	55.15.0510		KNOPF HOCH, SW, ZU 0501	ANY
(00)	MP...14	55.15.0510		KNOPF HOCH, SW, ZU 0501	ANY
(01)	MP...14	55.15.0512		KNOPF HOCH, RT, ZU 0501	ANY
	MP...15	55.15.0510		KNOPF HOCH, SW, ZU 0501	ANY
	MP...16	55.15.0510		KNOPF HOCH, SW, ZU 0501	ANY
	MP...17	55.15.0510		KNOPF HOCH, SW, ZU 0501	ANY
	MP...18	55.15.0510		KNOPF HOCH, SW, ZU 0501	ANY
(00)	MP...19	55.15.0510		KNOPF HOCH, SW, ZU 0501	ANY
(01)	MP...19	55.15.0512		KNOPF HOCH, RT, ZU 0501	ANY
(00)	MP...20	55.15.0510		KNOPF HOCH, SW, ZU 0501	ANY
(01)	MP...20	55.15.0518		KNOPF HOCH, GE, ZU 0501	ANY
(00)	MP...21	55.15.0510		KNOPF HOCH, SW, ZU 0501	ANY
(01)	MP...21	55.15.0518		KNOPF HOCH, GE, ZU 0501	ANY
(00)	MP...22	55.15.0510		KNOPF HOCH, SW, ZU 0501	ANY
(01)	MP...22	55.15.0518		KNOPF HOCH, GE, ZU 0501	ANY
(00)	MP...23	55.15.0510		KNOPF HOCH, SW, ZU 0501	ANY
(01)	MP...23	55.15.0518		KNOPF HOCH, GE, ZU 0501	ANY
	MP...25	55.15.0510		KNOPF HOCH, SW, ZU 0501	ANY
	MP...26	55.15.0510		KNOPF HOCH, SW, ZU 0501	ANY
	MP...28	55.15.0510		KNOPF HOCH, SW, ZU 0501	ANY
	MP...29	55.15.0510		KNOPF HOCH, SW, ZU 0501	ANY
	MP...30	55.15.0510		KNOPF HOCH, SW, ZU 0501	ANY
	MP...31	55.15.0510		KNOPF HOCH, SW, ZU 0501	ANY
	MP...33	55.15.0510		KNOPF HOCH, SW, ZU 0501	ANY
	MP...34	55.15.0510		KNOPF HOCH, SW, ZU 0501	ANY
	MP...35	1.328.601.11		CR AUXILIARY KEYS-PCB	ST
	MP...36	1.328.601.01		ETIKETTE	ST

S T U D E R (01) 90/09/06 LAR CR AUXILIARY KEYS PL 1.328.601.00 PAGE 3

IND.	POS.NO.	PART NO.	VALUE	SPECIFICATIONS / EQUIVALENT	MANUF.
	F.....1	54.14.4034		STECKER 34P. ACTION-PIN	ANY
	S.....1	55.15.0501		KEY	ANY
	S.....2	55.15.0501		KEY	ANY
	S.....3	55.15.0501		KEY	ANY
	S.....4	55.15.0501		KEY	ANY
	S.....5	55.15.0501		KEY	ANY
	S.....6	55.15.0501		KEY	ANY
	S.....7	55.15.0501		KEY	ANY
	S.....8	55.15.0501		KEY	ANY
	S....10	55.15.0501		KEY	ANY
	S....11	55.15.0501		KEY	ANY
	S....12	55.15.0501		KEY	ANY
	S....13	55.15.0501		KEY	ANY
	S....14	55.15.0501		KEY	ANY
	S....15	55.15.0501		KEY	ANY
	S....16	55.15.0501		KEY	ANY
	S....17	55.15.0501		KEY	ANY
	S....18	55.15.0501		KEY	ANY
	S....19	55.15.0501		KEY	ANY
	S....20	55.15.0501		KEY	ANY
	S....21	55.15.0501		KEY	ANY
	S....22	55.15.0501		KEY	ANY
	S....23	55.15.0501		KEY	ANY
	S....25	55.15.0501		KEY	ANY
	S....26	55.15.0501		KEY	ANY
	S....28	55.15.0501		KEY	ANY
	S....29	55.15.0501		KEY	ANY
	S....30	55.15.0501		KEY	ANY
	S....31	55.15.0501		KEY	ANY
	S....33	55.15.0501		KEY	ANY
	S....34	55.15.0501		KEY	ANY
	XDL...5	1.862.813.03		LED-ABSTANDSHALTER	ANY
	XDL...6	1.862.813.03		LED-ABSTANDSHALTER	ANY
	XDL...7	1.862.813.03		LED-ABSTANDSHALTER	ANY
	XDL...9	1.862.813.03		LED-ABSTANDSHALTER	ANY

S T U D E R (01) 90/09/06 LAR CR AUXILIARY KEYS PL 1.328.601.00 PAGE 4

IND.	POS.NO.	PART NO.	VALUE	SPECIFICATIONS / EQUIVALENT	MANUF.
	XDL..10	1.862.813.03		LED-ABSTANDSHALTER	ANY
	XDL..11	1.862.813.03		LED-ABSTANDSHALTER	ANY
	XDL..13	1.862.813.03		LED-ABSTANDSHALTER	ANY
	XDL..14	1.862.813.03		LED-ABSTANDSHALTER	ANY
	XDL..16	1.862.813.03		LED-ABSTANDSHALTER	ANY

REMARKS: (01) 06.09.90 LAR MP 1-34

MANUFACTURERS:
St = STUDER / Ph = PHILIPS / So = SONY

ABBREVIATIONS:
CER = CERAMIC / FILM = FILM TYPE / XF = CLAMP FOR FUSES /
XIC = IC SOCKET

ORIG-89/09/14 (01) 90/09/06

S T U D E R (01) 90/09/06 LAR CR AUXILIARY KEYS PL 1.328.601.00 PAGE 5

CR REMBUS & PROCESSOR 1.328.602.21

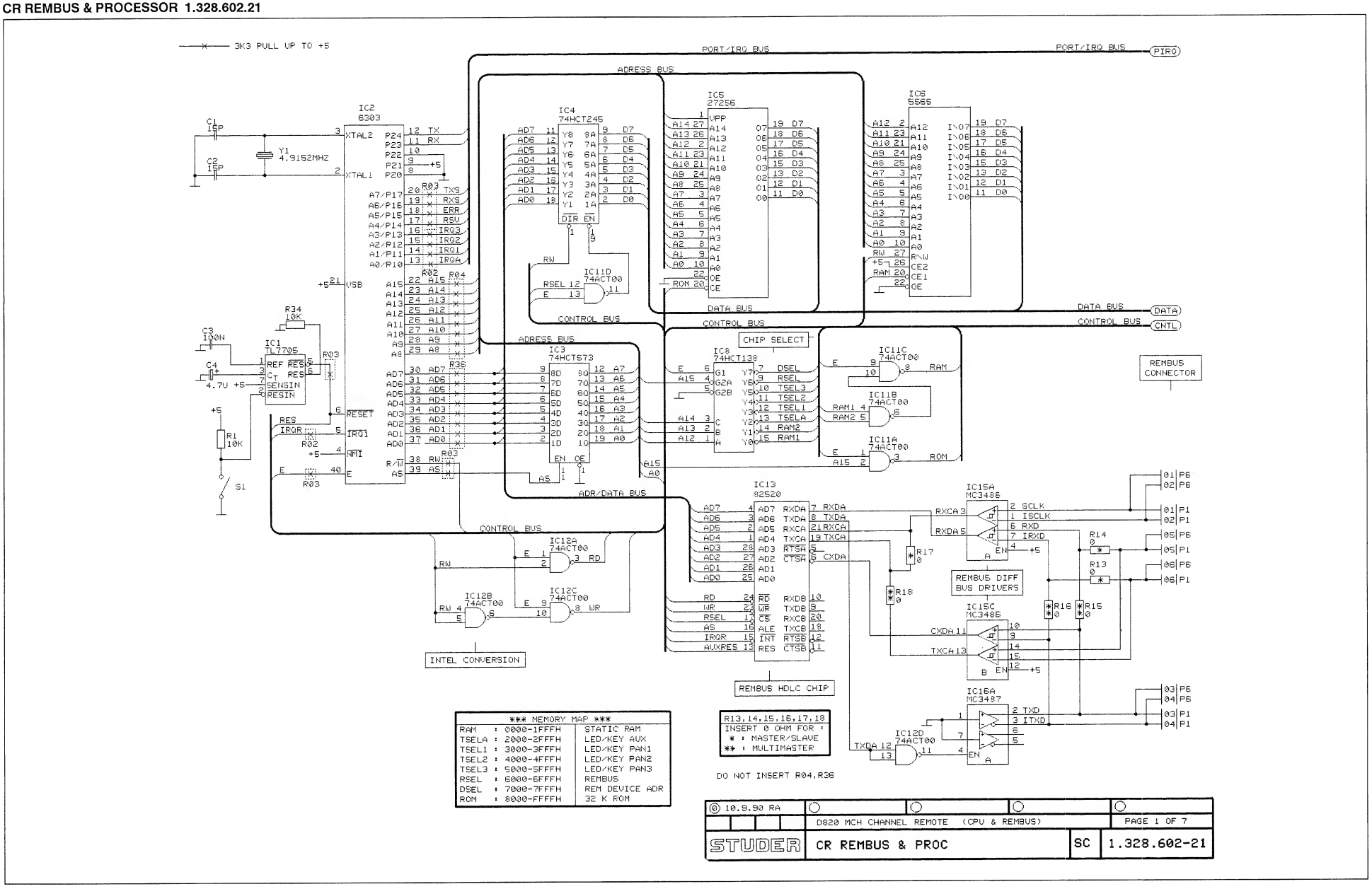

CR REMBUS & PROCESSOR 1.328.602.21

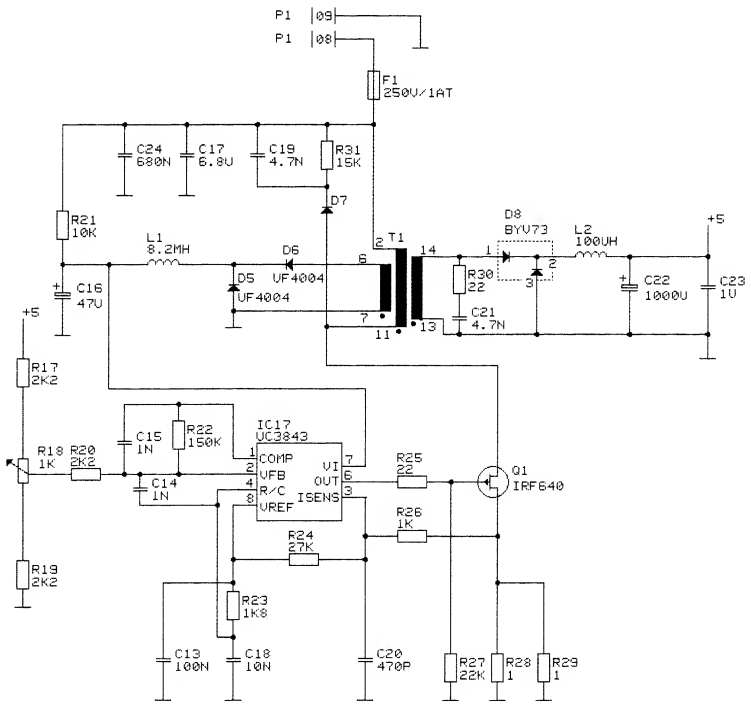

© 10.9.90 RA				
	D820 MCH CHANNEL REMOTE (POWER SUPPLY)			PAGE 2 OF 7
STUDER	CR REMBUS & PROC		SC	1.328.602-21

CR REMBUS & PROCESSOR 1.328.602.21

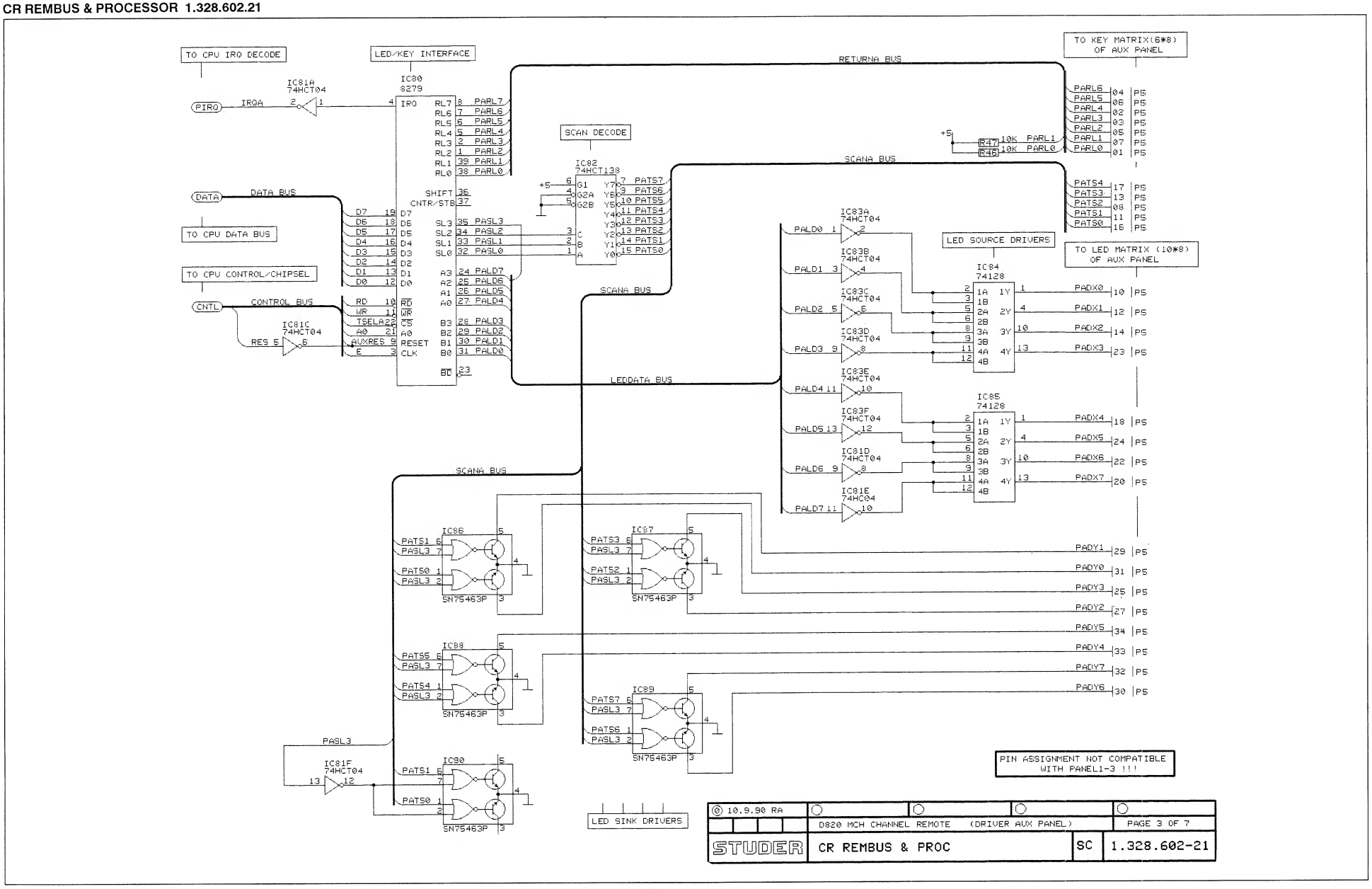

CR REMBUS & PROCESSOR 1.328.602.21

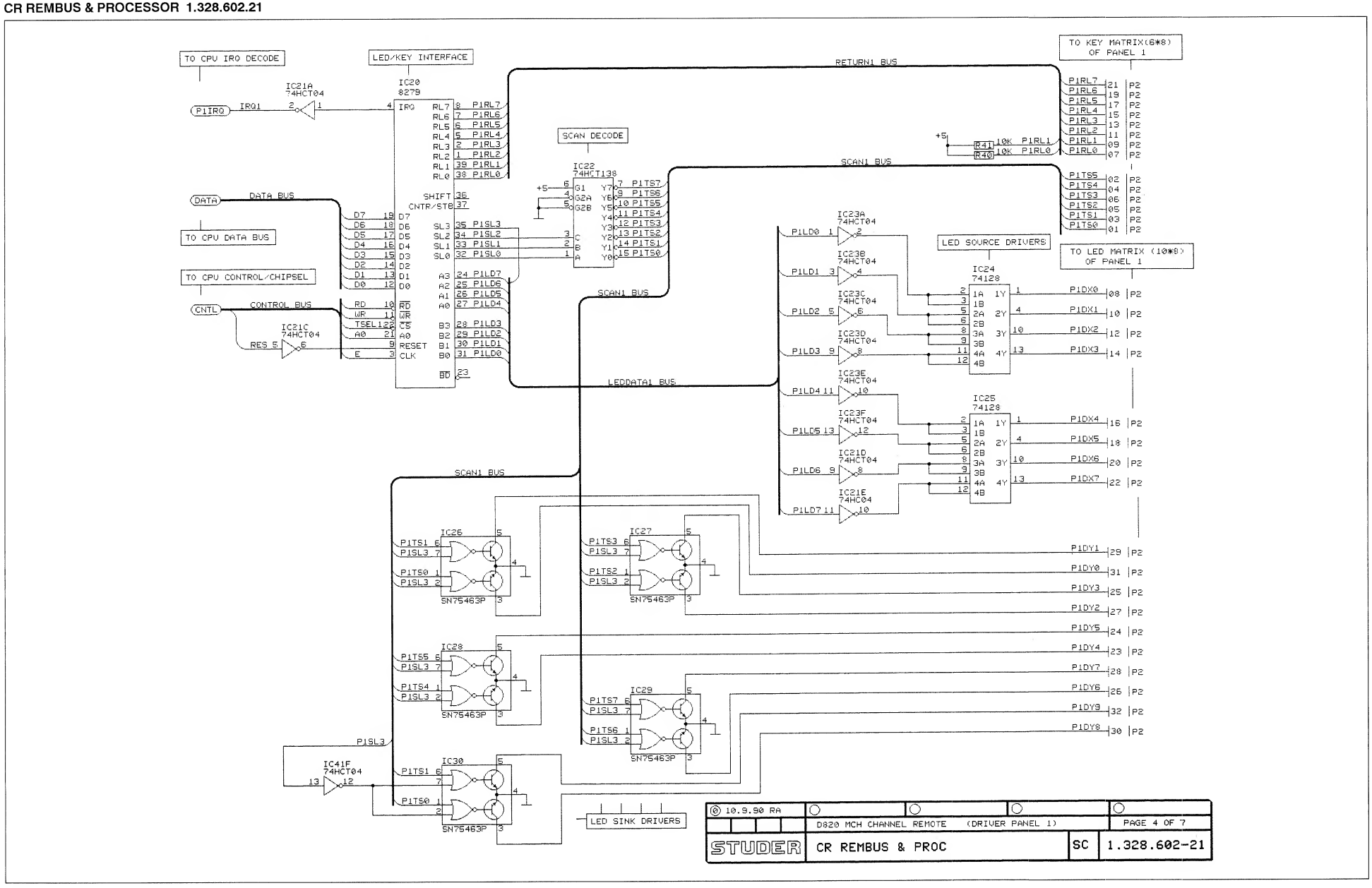

CR REMBUS & PROCESSOR 1.328.602.21

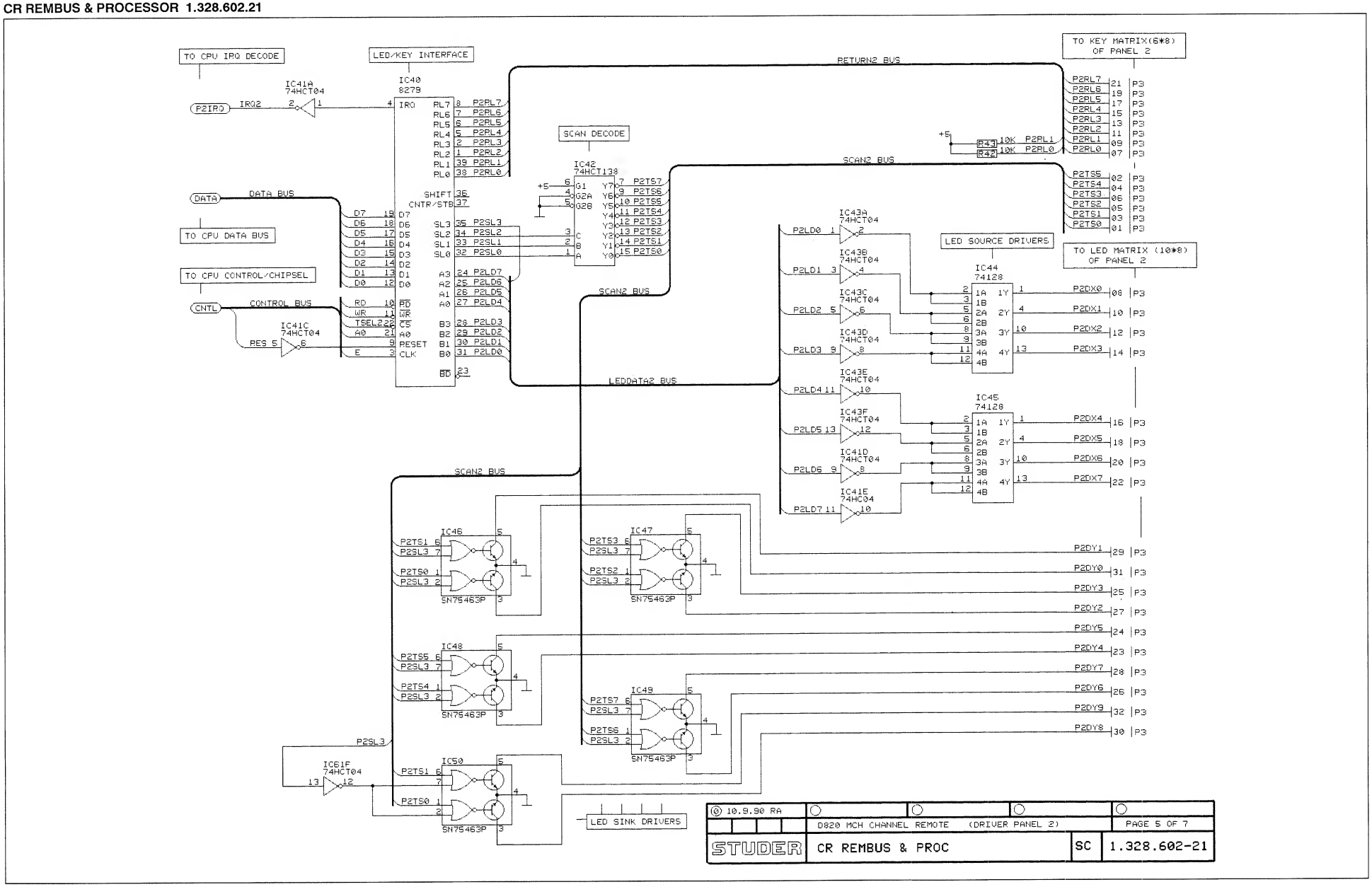

CR REMBUS & PROCESSOR 1.328.602.21

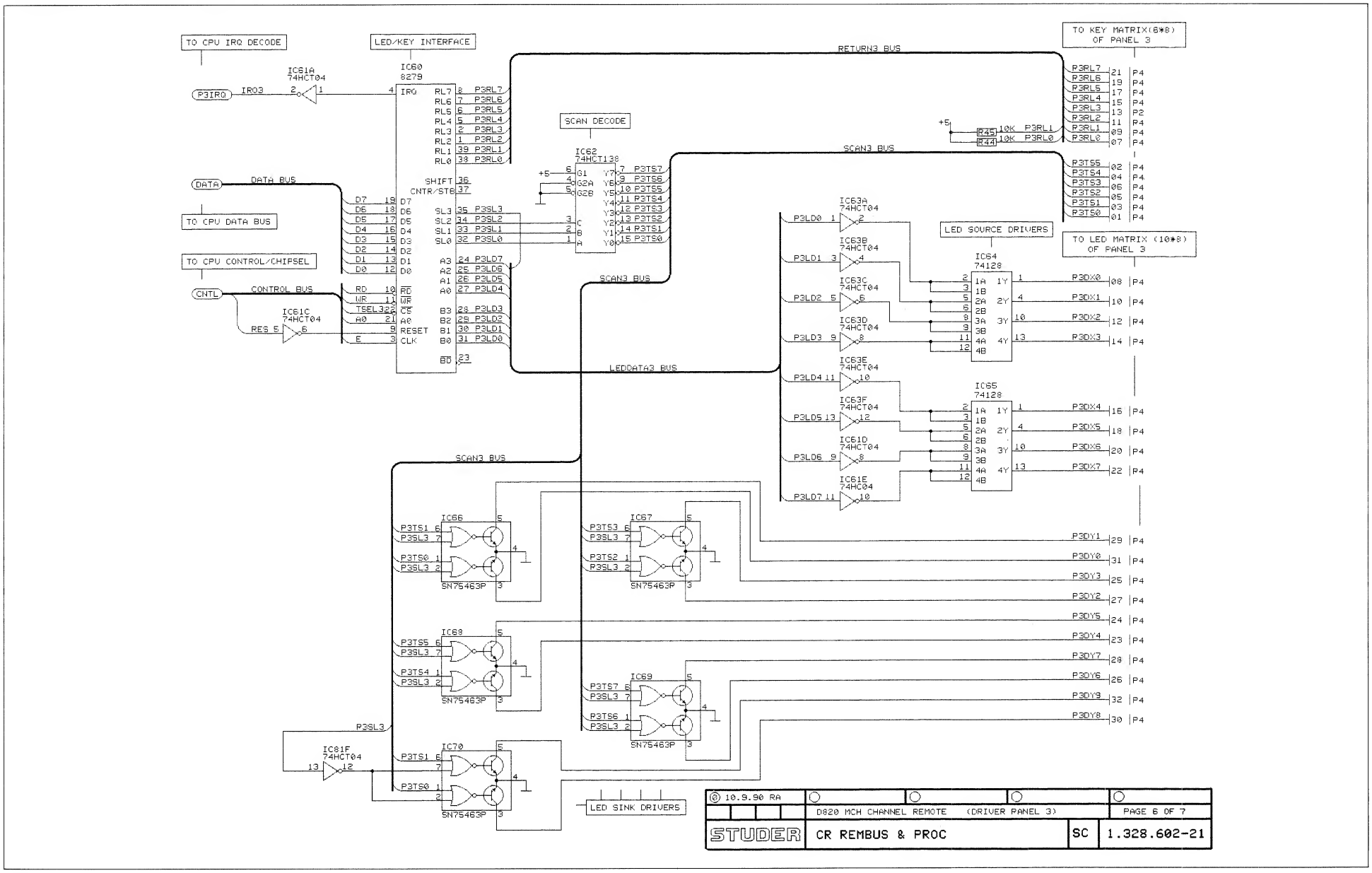

CR REMBUS & PROCESSOR 1.328.602.21

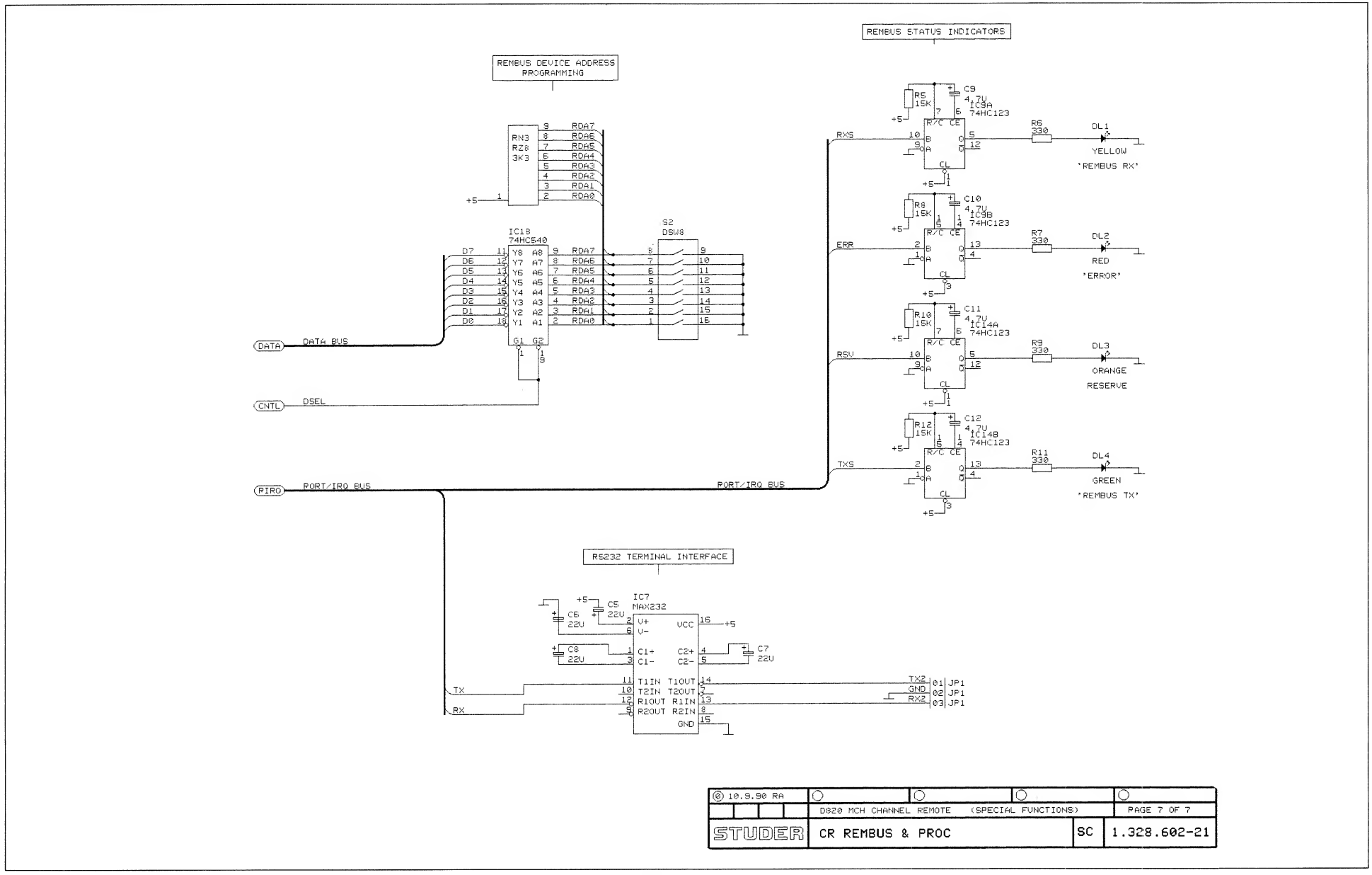

CR REMBUS & PROCESSOR 1.328.602.21

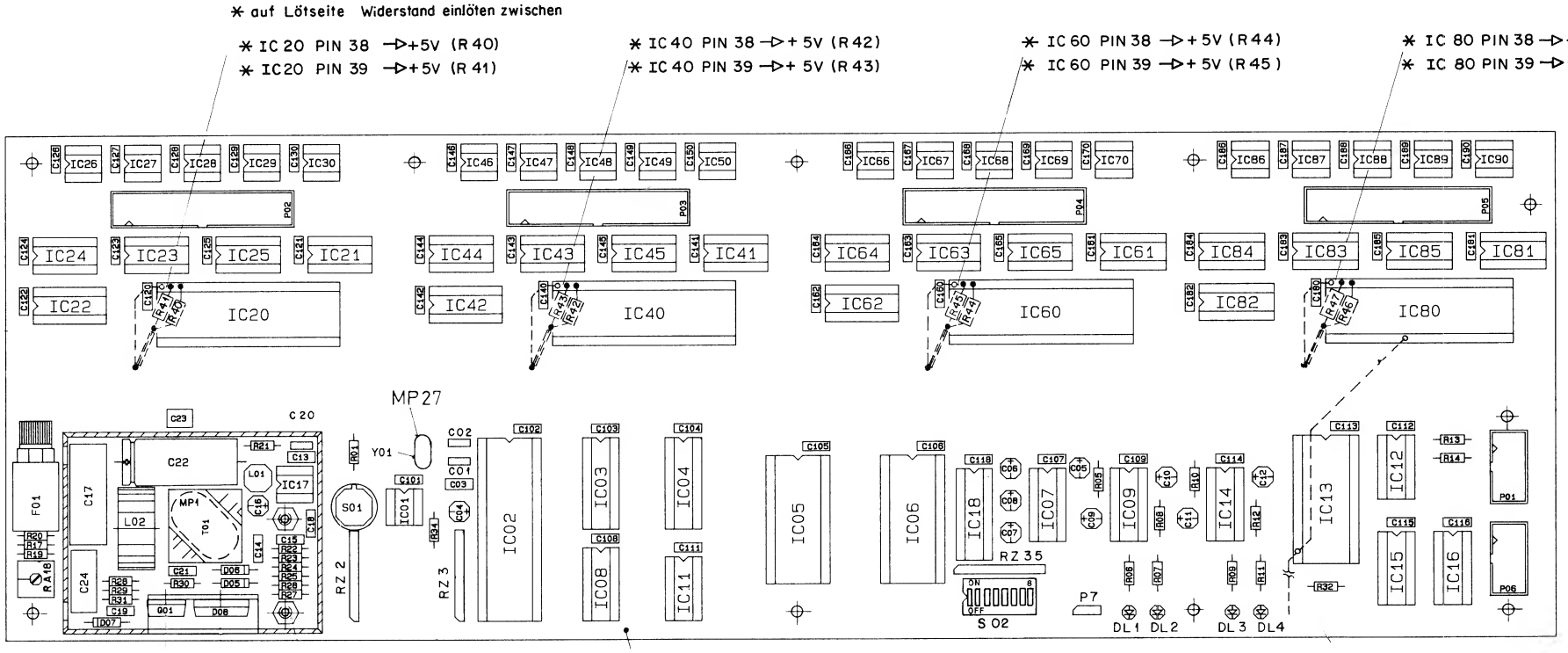

IND.	POS.NO.	PART NO.	VALUE	SPECIFICATIONS / EQUIVALENT	MANUF.
	C....1	59.34.1150	15 p	5%, 63V, CER	ANY
	C....2	59.34.1150	15 p	5%, 63V, CER	ANY
	C....3	59.06.0104	100 n	10%, 63V, PETP	ANY
	C....4	59.30.4479	4.7 u	20%, 10V, TA	ANY
	C....5	59.26.1220	22 u	20%, 10V, ALU	ANY
	C....6	59.26.1220	22 u	20%, 10V, ALU	ANY
	C....7	59.26.1220	22 u	20%, 10V, ALU	ANY
	C....8	59.26.1220	22 u	20%, 10V, ALU	ANY
	C....9	59.30.4479	4.7 u	20%, 10V, TA	ANY
	C....10	59.30.4479	4.7 u	20%, 10V, TA	ANY
	C....11	59.30.4479	4.7 u	20%, 10V, TA	ANY
	C....12	59.30.4479	4.7 u	20%, 10V, TA	ANY
	C....13	59.06.0104	100 n	10%, 63V, PETP	ANY
	C....14	59.06.0102	1 n	10%, 63V, PETP	ANY
	C....15	59.06.0102	1 n	10%, 63V, PETP	ANY
	C....16	59.22.4470	47 u	20%, 16V, EL	ANY
	C....17	59.02.0685	6.8 u	5%, 63V, MPC	ANY
	C....18	59.06.0103	10 n	10%, 63V, PETP	ANY
	C....19	59.32.2472	4.7 n	10%, 50V, CER	ANY
	C....20	59.32.2471	470 p	10%, 50V, CER	ANY
	C....21	59.32.2472	4.7 n	10%, 50V, CER	ANY
	C....22	59.25.3222	2200u	20%, 16V, EL	ANY
	C....23	59.06.0103	10 n	10%, 30V, PETP	ANY
	C....24	59.02.0684	680 N	5%, 63V, MPC	ANY
	C....101	59.40.0683	68 n	10%, 63V, PETP	ANY
	C....102	59.40.0683	68 n	10%, 63V, PETP	ANY
	C....103	59.40.0683	68 n	10%, 63V, PETP	ANY
	C....104	59.40.0683	68 n	10%, 63V, PETP	ANY
	C....105	59.40.0683	68 n	10%, 63V, PETP	ANY
	C....106	59.40.0683	68 n	10%, 63V, PETP	ANY
	C....107	59.40.0683	68 n	10%, 63V, PETP	ANY
	C....108	59.40.0683	68 n	10%, 63V, PETP	ANY
	C....109	59.40.0683	68 n	10%, 63V, PETP	ANY
	C....111	59.40.0683	68 n	10%, 63V, PETP	ANY
	C....112	59.40.0683	68 n	10%, 63V, PETP	ANY
	C....113	59.40.0683	68 n	10%, 63V, PETP	ANY
	C....114	59.40.0683	68 n	10%, 63V, PETP	ANY

5 T U D E R (00) 90/08/20 LAR CR REMBUS + PROC. , ESE PL 1.328.602.21 PAGE 1

IND.	POS.NO.	PART NO.	VALUE	SPECIFICATIONS / EQUIVALENT	MANUF.
	C...115	59.40.0683	68 n	10%, 63V, PETP	ANY
	C...116	59.40.0683	68 n	10%, 63V, PETP	ANY
	C...118	59.40.0683	68 n	10%, 63V, PETP	ANY
	C...120	59.40.0683	68 n	10%, 63V, PETP	ANY
	C...121	59.40.0683	68 n	10%, 63V, PETP	ANY
	C...122	59.40.0683	68 n	10%, 63V, PETP	ANY
	C...123	59.40.0683	68 n	10%, 63V, PETP	ANY
	C...124	59.40.0683	68 n	10%, 63V, PETP	ANY
	C...125	59.40.0683	68 n	10%, 63V, PETP	ANY
	C...126	59.40.0683	68 n	10%, 63V, PETP	ANY
	C...127	59.40.0683	68 n	10%, 63V, PETP	ANY
	C...128	59.40.0683	68 n	10%, 63V, PETP	ANY
	C...129	59.40.0683	68 n	10%, 63V, PETP	ANY
	C...130	59.40.0683	68 n	10%, 63V, PETP	ANY
	C...140	59.40.0683	68 n	10%, 63V, PETP	ANY
	C...141	59.40.0683	68 n	10%, 63V, PETP	ANY
	C...142	59.40.0683	68 n	10%, 63V, PETP	ANY
	C...143	59.40.0683	68 n	10%, 63V, PETP	ANY
	C...144	59.40.0683	68 n	10%, 63V, PETP	ANY
	C...145	59.40.0683	68 n	10%, 63V, PETP	ANY
	C...146	59.40.0683	68 n	10%, 63V, PETP	ANY
	C...147	59.40.0683	68 n	10%, 63V, PETP	ANY
	C...148	59.40.0683	68 n	10%, 63V, PETP	ANY
	C...149	59.40.0683	68 n	10%, 63V, PETP	ANY
	C...150	59.40.0683	68 n	10%, 63V, PETP	ANY
	C...160	59.40.0683	68 n	10%, 63V, PETP	ANY
	C...161	59.40.0683	68 n	10%, 63V, PETP	ANY
	C...162	59.40.0683	68 n	10%, 63V, PETP	ANY
	C...163	59.40.0683	68 n	10%, 63V, PETP	ANY
	C...164	59.40.0683	68 n	10%, 63V, PETP	ANY
	C...165	59.40.0683	68 n	10%, 63V, PETP	ANY
	C...166	59.40.0683	68 n	10%, 63V, PETP	ANY
	C...167	59.40.0683	68 n	10%, 63V, PETP	ANY
	C...168	59.40.0683	68 n	10%, 63V, PETP	ANY
	C...169	59.40.0683	68 n	10%, 63V, PETP	ANY
	C...170	59.40.0683	68 n	10%, 63V, PETP	ANY
	C...180	59.40.0683	68 n	10%, 63V, PETP	ANY

(00) 90/08/20 LAR CR REMBUS + PROC. , ESE PL 1.328.602.21 PAGE 2

IND.	POS.NO.	PART NO.	VALUE	SPECIFICATIONS / EQUIVALENT	MANUF.
	C...181	59.40.0683	68 n	10%, 63V, PETP	ANY
	C...182	59.40.0683	68 n	10%, 63V, PETP	ANY
	C...183	59.40.0683	68 n	10%, 63V, PETP	ANY
	C...184	59.40.0683	68 n	10%, 63V, PETP	ANY
	C...185	59.40.0683	68 n	10%, 63V, PETP	ANY
	C...186	59.40.0683	68 n	10%, 63V, PETP	ANY
	C...187	59.40.0683	68 n	10%, 63V, PETP	ANY
	C...188	59.40.0683	68 n	10%, 63V, PETP	ANY
	C...189	59.40.0683	68 n	10%, 63V, PETP	ANY
	C...190	59.40.0683	68 n	10%, 63V, PETP	ANY
	DL....1	50.04.2133		LED YEL	ANY
	DL....2	50.04.2121		LED RED	ANY
	DL....3	50.04.2133		LED YEL	ANY
	DL....4	50.04.2132		LED GRN	ANY
	D.....5	50.04.0138		BYT 01-400, UF 4004	ANY
	D.....6	50.04.0138		BYT 01-400, UF 4004	ANY
	D.....7	50.04.0138		BYT 01-400, UF 4004	ANY
	D.....8	50.04.0520		MSE 3045 PT, BYV 73-45	ANY
	F.....1	51.01.0117		T1.0A / 250V, 5*20mm	ANY
	IC....1	50.11.0122		YL 7705 ACP	ANY
	IC....2	50.16.0119		HD 63 A 03 RP	ANY
	IC....3	50.17.0573		74 HCT 573	ANY
	IC....4	50.17.0645		74 HCT 645	ANY
	IC....5	50.14.2004		HN 27256 (SW 1.328.899.21)	ANY
	IC....6	50.14.0133		HM 6264 LP-15	ANY
	IC....7	50.15.0120		MAX 232 CPE	ANY
	IC....8	50.17.0138		74 HCT 138	ANY
	IC....9	50.17.1123		74 HC 123	ANY
	IC...11	50.17.7000		74 ACT 00	ANY
	IC...12	50.17.7000		74 ACT 00	ANY
	IC...13	50.16.0153		SAB 82520-P	ANY
	IC...14	50.17.1123		74 HC 123	ANY
	IC...15	50.15.0104		MC 3486 P	ANY

5 T U D E R (00) 90/08/20 LAR CR REMBUS + PROC. , ESE PL 1.328.602.21 PAGE 3

IND.	POS.NO.	PART NO.	VALUE	SPECIFICATIONS / EQUIVALENT	MANUF.
	IC...16	50.15.0121		SN 75174 N	ANY
	IC...17	50.10.0113		IP 3643 N	ANY
	IC...18	50.17.1540		74 HC 540	ANY
	IC...20	50.16.0111		MSL 8279 P-5, IP 8279-5	ANY
	IC...21	50.17.0004		74 HCT 04	ANY
	IC...22	50.17.0138		74 HCT 138	ANY
	IC...23	50.17.0004		74 HCT 04	ANY
	IC...24	50.15.0122		74128	ANY
	IC...25	50.15.0122		74128	ANY
	IC...26	50.05.0203		SN 75463P	ANY
	IC...27	50.05.0203		SN 75463P	ANY
	IC...28	50.05.0203		SN 75463P	ANY
	IC...29	50.05.0203		SN 75463P	ANY
	IC...30	50.05.0203		SN 75463P	ANY
	IC...40	50.16.0111		MSL 8279 P-5, IP 8279-5	ANY
	IC...41	50.17.0004		74 HCT 04	ANY
	IC...42	50.17.0138		74 HCT 138	ANY
	IC...43	50.17.0004		74 HCT 04	ANY
	IC...44	50.15.0122		74128	ANY
	IC...45	50.15.0122		74128	ANY
	IC...46	50.05.0203		SN 75463P	ANY
	IC...47	50.05.0203		SN 75463P	ANY
	IC...48	50.05.0203		SN 75463P	ANY
	IC...49	50.05.0203		SN 75463P	ANY
	IC...50	50.05.0203		SN 75463P	ANY
	IC...60	50.16.0111		MSL 8279 P-5, IP 8279-5	ANY
	IC...61	50.17.0004		74 HCT 04	ANY
	IC...62	50.17.0138		74 HCT 138	ANY
	IC...63	50.17.0004		74 HCT 04	ANY
	IC...64	50.15.0122		74128	ANY
	IC...65	50.15.0122		74128	ANY
	IC...66	50.05.0203		SN 75463P	ANY
	IC...67	50.05.0203		SN 75463P	ANY
	IC...68	50.05.0203		SN 75463P	ANY
	IC...69	50.05.0203		SN 75463P	ANY
	IC...70	50.05.0203		SN 75463P	ANY
	IC...80	50.16.0111		MSL 8279 P-5, IP 8279-5	ANY

5 T U D E R (00) 90/08/20 LAR CR REMBUS + PROC. , ESE PL 1.328.602.21 PAGE 4

CR REMBUS & PROCESSOR 1.328.602.21

IND.	POS.NO.	PART NO.	VALUE	SPECIFICATIONS / EQUIVALENT	MANUF.
	IC...81	50.17.0004		74 HCT 04	ANY
	IC...82	50.17.0138		74 HCT 138	ANY
	IC...83	50.17.0004		74 HCT 04	ANY
	IC...84	50.15.0122		74128	ANY
	IC...85	50.15.0122		74128	ANY
	IC...86	50.05.0203		SN 75463P	ANY
	IC...87	50.05.0203		SN 75463P	ANY
	IC...88	50.05.0203		SN 75463P	ANY
	IC...89	50.05.0203		SN 75463P	ANY
	IC...90	50.05.0203		SN 75463P	ANY
	L.....1	62.01.0113	8.2 mH	5%, AXIAL	ANY
	L.....2	62.03.0040	100 uH	5A, FILTER	ANY
	MP....1	1.010.002.61		UNTERLAGE ZU SWITCHING TRAFO	ANY
	MP....2	1.010.015.50		ISOLIERSCHEIBE TO5	ANY
	MP....3	1.862.812.02		SCREEN	ST
	MP....4	1.010.022.22		NIETMUTTER M3*25	ANY
	MP....5	1.010.022.22		NIETMUTTER M3*25	ANY
	MP....6	21.53.9354		Z-SCHRAUBE M3*6 MIT SICHERUNGSSCHEIBE	ANY
	MP....7	21.53.9354		Z-SCHRAUBE M3*6 MIT SICHERUNGSSCHEIBE	ANY
	MP...10	50.20.0305		GLIMMER TO220	ANY
	MP...11	50.20.0317		GLIMMER TO218	ANY
	MP...12	50.20.0404		ISO-DURCHF.	ANY
	MP...13	50.20.0404		ISO-DURCHF.	ANY
	MP...14	37.01.0101		FEDERSCHEIBE M3	ANY
	MP...15	37.01.0101		FEDERSCHEIBE M3	ANY
	MP...16	37.01.0101		FEDERSCHEIBE M3	ANY
	MP...17	37.01.0101		FEDERSCHEIBE M3	ANY
	MP...18	1.010.098.27		DIST. BOLZEN 2/3MM	ANY
	MP...19	1.010.098.27		DIST. BOLZEN 2/3MM	ANY
	MP...20	21.53.0356		INNENSECHSKANT M3*10	ANY
	MP...21	21.53.0356		INNENSECHSKANT M3*10	ANY
	MP...22	1.328.602.11		CR REMBUS + PROC. PCB	ST
	MP...23	1.328.602.01		ETIK. PRINT.NR	ST
	MP...24	1.010.115.51		ETIK. SICHERUNG	ST
	MP...25	1.101.001.21		ETIK. HARDWARE 21	ST

IND.	POS.NO.	PART NO.	VALUE	SPECIFICATIONS / EQUIVALENT	MANUF.
	MP...26	43.01.0108		ESE-WARNSCHILD	ANY
	MP...27	89.01.1499		QUARZ-UNTERLAGE	ANY
	P.....1	54.14.2001		STECKER 10 P, SN, GERADE	ANY
	P.....2	54.14.2007		STECKER 34 P, SN, GERADE	ANY
	P.....3	54.14.2007		STECKER 34 P, SN, GERADE	ANY
	P.....4	54.14.2007		STECKER 34 P, SN, GERADE	ANY
	P.....5	54.14.2007		STECKER 34 P, SN, GERADE	ANY
	P.....6	54.14.2001		STECKER 10 P, SN, GERADE	ANY
	P.....7	54.01.0020		STIFTLEISTE *** QTY 3 ***	ANY
	Q.....1	50.03.1510		IRF 640	ANY
	R.....1	57.11.3103	10 k	1%	ANY
	R.....5	57.11.3153	15 k	1%	ANY
	R.....6	57.11.3331	330 E	1%	ANY
	R.....7	57.11.3331	330 E	1%	ANY
	R.....8	57.11.3153	15 k	1%	ANY
	R.....9	57.11.3331	330 E	1%	ANY
	R....10	57.11.3153	15 k	1%	ANY
	R....11	57.11.3331	330 E	1%	ANY
	R....12	57.11.3153	15 k	1%	ANY
	R....13	57.11.3000	0 E		ANY
	R....14	57.11.3000	0 E		ANY
	R....17	57.11.3222	2.2 k	1%	ANY
	R....19	57.11.3222	2.2 k	1%	ANY
	R....20	57.11.3222	2.2 k	1%	ANY
	R....21	57.11.3103	10 k	1%	ANY
	R....22	57.11.3154	150 k	1%	ANY
	R....23	57.11.3182	1.8 k	1%	ANY
	R....24	57.11.3273	27 k	1%	ANY
	R....25	57.11.3220	22 E	1%	ANY
	R....26	57.11.3102	1 k	1%	ANY
	R....27	57.11.3223	22 k	1%	ANY
	R....28	57.11.3109	1 E	1%	ANY
	R....29	57.11.3109	1 E	1%	ANY
	R....30	57.11.3220	22 E	1%	ANY

IND.	POS.NO.	PART NO.	VALUE	SPECIFICATIONS / EQUIVALENT	MANUF.
	R....31	57.11.3153	15 k	1%	ANY
	R....32	57.11.3000	0 E		ANY
	R....34	57.11.3103	10 k	1%	ANY
	R....40	57.11.3103	10 K	1%	ANY
	R....41	57.11.3103	10 K	1%	ANY
	R....42	57.11.3103	10 K	1%	ANY
	R....43	57.11.3103	10 K	1%	ANY
	R....44	57.11.3103	10 K	1%	ANY
	R....45	57.11.3103	10 K	1%	ANY
	R....46	57.11.3103	10 K	1%	ANY
	R....47	57.11.3103	10 K	1%	ANY
	RA...18	58.01.8102	1 K	10% TRIMMPOT.	ANY
	RZ....2	57.99.2002	3.3 k	5%, SIP 10	ANY
	RZ....3	57.99.2002	3.3 k	5%, SIP 10	ANY
	RZ...35	57.99.2002	3.3 k	5%, SIP 10	ANY
	S.....1	55.03.0122		TASTE, IMPULS	ANY
	S.....2	55.01.0168		DIL-SWITCH, 8P	ANY
	T.....1	1.022.628.00		SWITCHING-TRANSFORMER	St
	W.....1	1.010.112.64	120 MM	WRAP-DRAHT (VON IC 13/13 NACH IC 80/9)	ST
	XF....1	53.03.0118		FUSE-HOLDER, 5*20, LIEGEND	ANY
	XIC...2	53.03.0172		IC-SOCKEL, 40P	ANY
	XIC...5	53.03.0173		IC-SOCKEL, 28P	ANY
	XIC...6	53.03.0173		IC-SOCKEL, 28P	ANY
	XIC..13	53.03.0173		IC-SOCKEL, 28P	ANY
	XIC..15	53.03.0168		IC-SOCKEL, 16P	ANY
	XIC..16	53.03.0168		IC-SOCKEL, 16P	ANY
	XIC..20	53.03.0172		IC-SOCKEL, 40P	ANY
	XIC..40	53.03.0172		IC-SOCKEL, 40P	ANY
	XIC..60	53.03.0172		IC-SOCKEL, 40P	ANY
	XIC..80	53.03.0172		IC-SOCKEL, 40P	ANY

IND.	POS.NO.	PART NO.	VALUE	SPECIFICATIONS / EQUIVALENT	MANUF.
	Y.....1	89.01.0560		QUARZ 4.9152 MHZ	ANY

REMARKS:

MANUFACTURERS:
St = STUDER / Ph = PHILIPS / So = SONY

ABBREVIATIONS:
CER = CERAMIC / FILM = FILM TYPE / XF = CLAMP FOR FUSES /
XIC = IC SOCKET

ORIG 90/08/20

CR CHANNEL KEYS 1.328.603.00

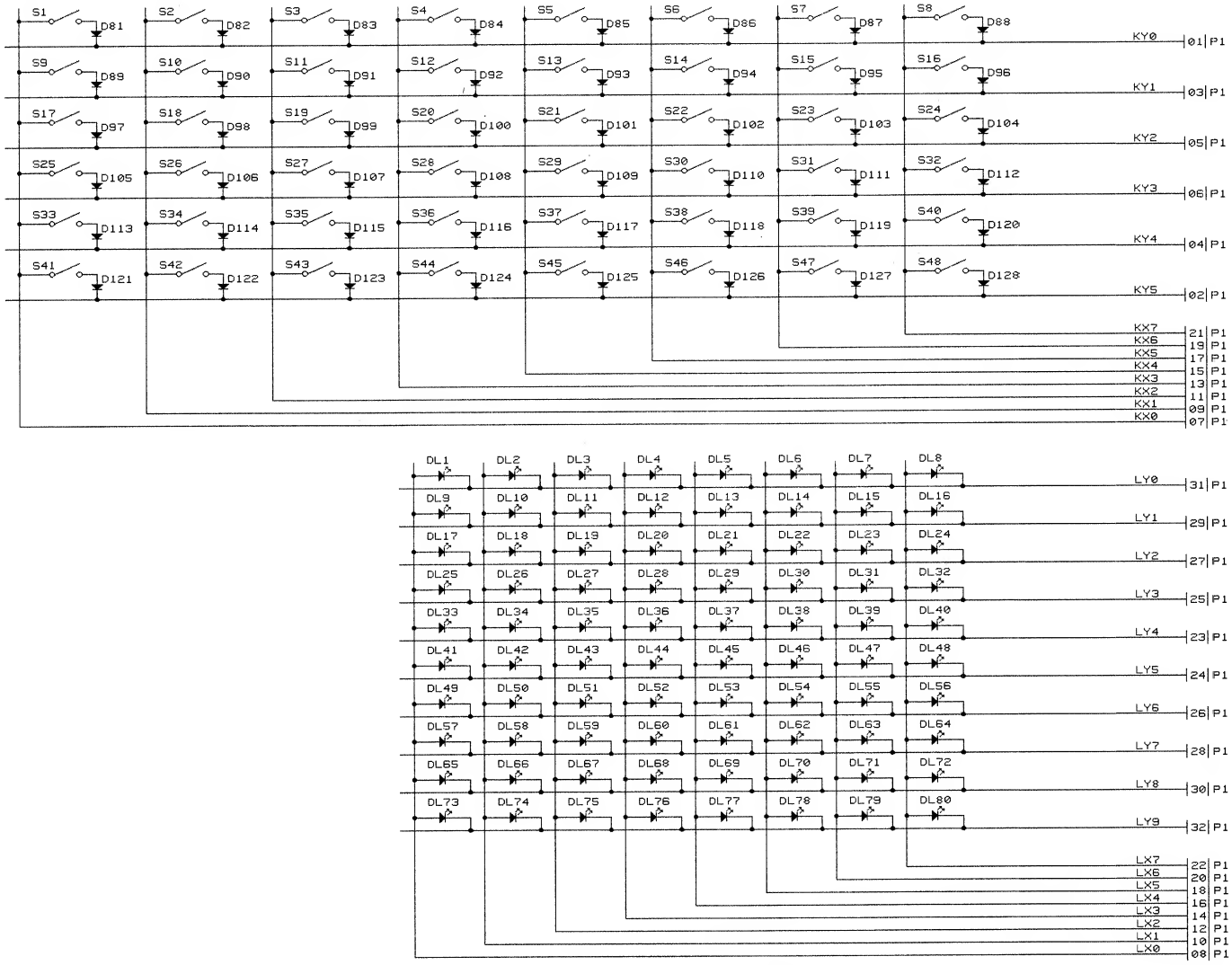

FUNCTIONAL ASSIGNMENT FOR PANEL 1,2,3

READY KEYS
CH1-8,9-16,17,24

SAFE KEYS
CH1-8,9-16,17,24

INP/REP KEYS
CH1-8,9-16,17,24

READY KEYS
CH25-32,33-40,41-48

SAFE KEYS
CH25-32,33-40,41-48

INP/REP KEYS
CH25-32,33-40,41-48

CH08/32,16/40,24/48
CH07/31,15/39,23/47
CH06/30,14/38,22/46
CH05/29,13/37,21/45
CH04/28,12/36,20/44
CH03/27,11/35,19/43
CH02/26,10/34,18/42
CH01/25,09/33,17/41

LED RED,'RECORD'
CH1-8,9-16,17,24

LED GREEN,'READY'
CH1-8,9-16,17,24

LED YELLOW,'SAFE'
CH1-8,9-16,17,24

LED YELLOW,'INPUT'
CH1-8,9-16,17,24

LED YELLOW,'REPRO'
CH1-8,9-16,17,24

LED RED,'RECORD'
CH25-32,33-40,41-48

LED GREEN,'READY'
CH25-32,33-40,41-48

LED YELLOW,'SAFE'
CH25-32,33-40,41-48

LED YELLOW,'INPUT'
CH25-32,33-40,41-48

LED YELLOW,'REPRO'
CH25-32,33-40,41-48

CH08/32,16/40,24/48
CH07/31,15/39,23/47
CH06/30,14/38,22/46
CH05/29,13/37,21/45
CH04/28,12/36,20/44
CH03/27,11/35,19/43
CH02/26,10/34,18/42
CH01/25,09/33,17/41

NOTE:
PANEL 1,2,3 ARE
ABSOLUTELY IDENTICAL !!!

© 24.01.89/MB	D820MCH CHANNEL REMOTE		PAGE 1 OF 1
STUDER	CR CHANNEL KEYS	SC	1.328.603.00

CR CHANNEL KEYS 1.328.603.00

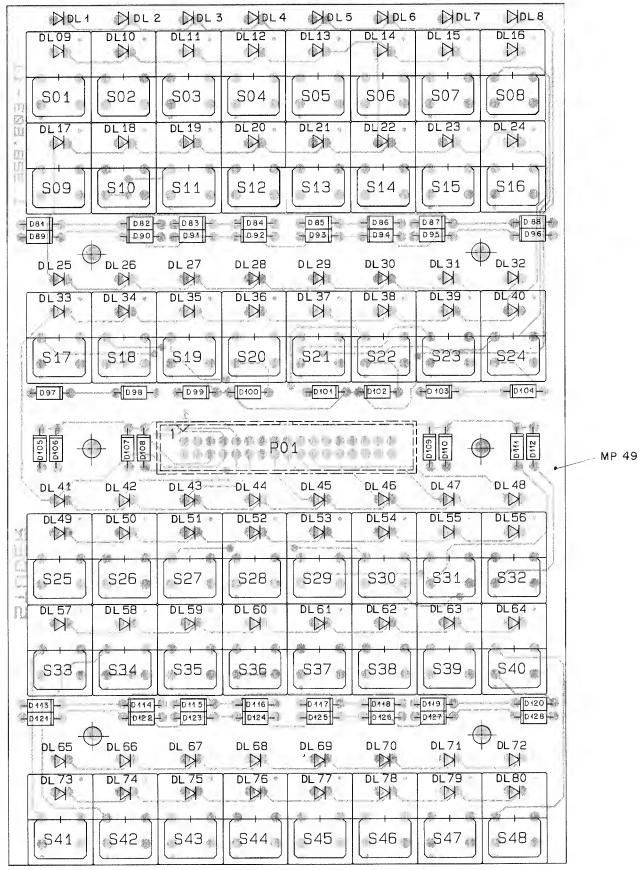

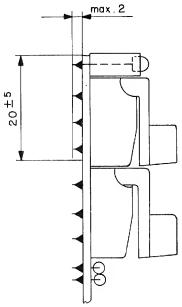

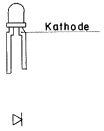

LED - Abstandhalter nach PL bestückt.
zB. XDL 1 = LED - Abstandhalter van DL 1

Tasten - Knöpfe nach PL bestückt.
zB. MP 1 = Tasten - Knopf van S1

Etikette MP 50
aufgeklebt nach Fabrikationsmuster.

IND.	POS.NO.	PART NO.	VALUE	SPECIFICATIONS / EQUIVALENT		MANUF.
	D...81	50.04.0125	1N 4448			ANY
	D...82	50.04.0125	1N 4448			ANY
	D...83	50.04.0125	1N 4448			ANY
	D...84	50.04.0125	1N 4448			ANY
	D...85	50.04.0125	1N 4448			ANY
	D...86	50.04.0125	1N 4448			ANY
	D...87	50.04.0125	1N 4448			ANY
	D...88	50.04.0125	1N 4448			ANY
	D...89	50.04.0125	1N 4448			ANY
	D...90	50.04.0125	1N 4448			ANY
	D...91	50.04.0125	1N 4448			ANY
	D...92	50.04.0125	1N 4448			ANY
	D...93	50.04.0125	1N 4448			ANY
	D...94	50.04.0125	1N 4448			ANY
	D...95	50.04.0125	1N 4448			ANY
	D...96	50.04.0125	1N 4448			ANY
	D...97	50.04.0125	1N 4448			ANY
	D...98	50.04.0125	1N 4448			ANY
	D...99	50.04.0125	1N 4448			ANY
	D...100	50.04.0125	1N 4448			ANY
	D...101	50.04.0125	1N 4448			ANY
	D...102	50.04.0125	1N 4448			ANY
	D...103	50.04.0125	1N 4448			ANY
	D...104	50.04.0125	1N 4448			ANY
	D...105	50.04.0125	1N 4448			ANY
	D...106	50.04.0125	1N 4448			ANY
	D...107	50.04.0125	1N 4448			ANY
	D...108	50.04.0125	1N 4448			ANY
	D...109	50.04.0125	1N 4448			ANY
	D...110	50.04.0125	1N 4448			ANY
	D...111	50.04.0125	1N 4448			ANY
	D...112	50.04.0125	1N 4448			ANY
	D...113	50.04.0125	1N 4448			ANY
	D...114	50.04.0125	1N 4448			ANY
	D...115	50.04.0125	1N 4448			ANY
	D...116	50.04.0125	1N 4448			ANY
	D...117	50.04.0125	1N 4448			ANY

S T U D E R (01) 90/09/06 LAR CR CHANNEL KEYS PL 1.328.603.00 PAGE 1

IND.	POS.NO.	PART NO.	VALUE	SPECIFICATIONS / EQUIVALENT		MANUF.
	D...118	50.04.0125	1N 4448			ANY
	D...119	50.04.0125	1N 4448			ANY
	D...120	50.04.0125	1N 4448			ANY
	D...121	50.04.0125	1N 4448			ANY
	D...122	50.04.0125	1N 4448			ANY
	D...123	50.04.0125	1N 4448			ANY
	D...124	50.04.0125	1N 4448			ANY
	D...125	50.04.0125	1N 4448			ANY
	D...126	50.04.0125	1N 4448			ANY
	D...127	50.04.0125	1N 4448			ANY
	D...128	50.04.0125	1N 4448			ANY
	DL....1	50.04.2129		LS 3160	RT DIFF	ANY
	DL....2	50.04.2129		LS 3160	RT DIFF	ANY
	DL....3	50.04.2129		LS 3160	RT DIFF	ANY
	DL....4	50.04.2129		LS 3160	RT DIFF	ANY
	DL....5	50.04.2129		LS 3160	RT DIFF	ANY
	DL....6	50.04.2129		LS 3160	RT DIFF	ANY
	DL....7	50.04.2129		LS 3160	RT DIFF	ANY
	DL....8	50.04.2129		LS 3160	RT DIFF	ANY
	DL....9	50.04.2162		HLMP 1540	GN KLAR	ANY
	DL...10	50.04.2162		HLMP 1540	GN KLAR	ANY
	DL...11	50.04.2162		HLMP 1540	GN KLAR	ANY
	DL...12	50.04.2162		HLMP 1540	GN KLAR	ANY
	DL...13	50.04.2162		HLMP 1540	GN KLAR	ANY
	DL...14	50.04.2162		HLMP 1540	GN KLAR	ANY
	DL...15	50.04.2162		HLMP 1540	GN KLAR	ANY
	DL...16	50.04.2162		HLMP 1540	GN KLAR	ANY
	DL...17	50.04.2152		HLMP 1440	GB KLAR	ANY
	DL...18	50.04.2152		HLMP 1440	GB KLAR	ANY
	DL...19	50.04.2152		HLMP 1440	GB KLAR	ANY
	DL...20	50.04.2152		HLMP 1440	GB KLAR	ANY
	DL...21	50.04.2152		HLMP 1440	GB KLAR	ANY
	DL...22	50.04.2152		HLMP 1440	GB KLAR	ANY
	DL...23	50.04.2152		HLMP 1440	GB KLAR	ANY
	DL...24	50.04.2152		HLMP 1440	GB KLAR	ANY
	DL...25	50.04.2152		HLMP 1440	GB KLAR	ANY

S T U D E R (01) 90/09/06 LAR CR CHANNEL KEYS PL 1.328.603.00 PAGE 2

IND.	POS.NO.	PART NO.	VALUE	SPECIFICATIONS / EQUIVALENT		MANUF.
	DL...26	50.04.2152		HLMP 1440	GB KLAR	ANY
	DL...27	50.04.2152		HLMP 1440	GB KLAR	ANY
	DL...28	50.04.2152		HLMP 1440	GB KLAR	ANY
	DL...29	50.04.2152		HLMP 1440	GB KLAR	ANY
	DL...30	50.04.2152		HLMP 1440	GB KLAR	ANY
	DL...31	50.04.2152		HLMP 1440	GB KLAR	ANY
	DL...32	50.04.2152		HLMP 1440	GB KLAR	ANY
	DL...33	50.04.2152		HLMP 1440	GB KLAR	ANY
	DL...34	50.04.2152		HLMP 1440	GB KLAR	ANY
	DL...35	50.04.2152		HLMP 1440	GB KLAR	ANY
	DL...36	50.04.2152		HLMP 1440	GB KLAR	ANY
	DL...37	50.04.2152		HLMP 1440	GB KLAR	ANY
	DL...38	50.04.2152		HLMP 1440	GB KLAR	ANY
	DL...39	50.04.2152		HLMP 1440	GB KLAR	ANY
	DL...40	50.04.2152		HLMP 1440	GB KLAR	ANY
	DL...41	50.04.2129		LS 3160	RT DIFF	ANY
	DL...42	50.04.2129		LS 3160	RT DIFF	ANY
	DL...43	50.04.2129		LS 3160	RT DIFF	ANY
	DL...44	50.04.2129		LS 3160	RT DIFF	ANY
	DL...45	50.04.2129		LS 3160	RT DIFF	ANY
	DL...46	50.04.2129		LS 3160	RT DIFF	ANY
	DL...47	50.04.2129		LS 3160	RT DIFF	ANY
	DL...48	50.04.2129		LS 3160	RT DIFF	ANY
	DL...49	50.04.2162		HLMP 1540	GN KLAR	ANY
	DL...50	50.04.2162		HLMP 1540	GN KLAR	ANY
	DL...51	50.04.2162		HLMP 1540	GN KLAR	ANY
	DL...52	50.04.2162		HLMP 1540	GN KLAR	ANY
	DL...53	50.04.2162		HLMP 1540	GN KLAR	ANY
	DL...54	50.04.2162		HLMP 1540	GN KLAR	ANY
	DL...55	50.04.2162		HLMP 1540	GN KLAR	ANY
	DL...56	50.04.2162		HLMP 1540	GN KLAR	ANY
	DL...57	50.04.2152		HLMP 1440	GB KLAR	ANY
	DL...58	50.04.2152		HLMP 1440	GB KLAR	ANY
	DL...59	50.04.2152		HLMP 1440	GB KLAR	ANY
	DL...60	50.04.2152		HLMP 1440	GB KLAR	ANY
	DL...61	50.04.2152		HLMP 1440	GB KLAR	ANY
	DL...62	50.04.2152		HLMP 1440	GB KLAR	ANY

S T U D E R (01) 90/09/06 LAR CR CHANNEL KEYS PL 1.328.603.00 PAGE 3

CR CHANNEL KEYS 1.328.603.00

IND.	POS.NO.	PART NO.	VALUE	SPECIFICATIONS / EQUIVALENT	MANUF.
	DL...63	50.04.2152		HLMP 1440 GB KLAR	ANY
	DL...64	50.04.2152		HLMP 1440 GB KLAR	ANY
	DL...65	50.04.2152		HLMP 1440 GB KLAR	ANY
	DL...66	50.04.2152		HLMP 1440 GB KLAR	ANY
	DL...67	50.04.2152		HLMP 1440 GB KLAR	ANY
	DL...68	50.04.2152		HLMP 1440 GB KLAR	ANY
	DL...69	50.04.2152		HLMP 1440 GB KLAR	ANY
	DL...70	50.04.2152		HLMP 1440 GB KLAR	ANY
	DL...71	50.04.2152		HLMP 1440 GB KLAR	ANY
	DL...72	50.04.2152		HLMP 1440 GB KLAR	ANY
	DL...73	50.04.2152		HLMP 1440 GB KLAR	ANY
	DL...74	50.04.2152		HLMP 1440 GB KLAR	ANY
	DL...75	50.04.2152		HLMP 1440 GB KLAR	ANY
	DL...76	50.04.2152		HLMP 1440 GB KLAR	ANY
	DL...77	50.04.2152		HLMP 1440 GB KLAR	ANY
	DL...78	50.04.2152		HLMP 1440 GB KLAR	ANY
	DL...79	50.04.2152		HLMP 1440 GB KLAR	ANY
	DL...80	50.04.2152		HLMP 1440 GB KLAR	ANY
(00)	MP....1	55.15.0510		KNOPF HOCH, SW, ZU 0501	ANY
(01)	MP....1	55.15.0515		KNOPF HOCH, GN, ZU 0501	ANY
(00)	MP....2	55.15.0510		KNOPF HOCH, SW, ZU 0501	ANY
(01)	MP....2	55.15.0515		KNOPF HOCH, GN, ZU 0501	ANY
(00)	MP....3	55.15.0510		KNOPF HOCH, SW, ZU 0501	ANY
(01)	MP....3	55.15.0515		KNOPF HOCH, GN, ZU 0501	ANY
(00)	MP....4	55.15.0510		KNOPF HOCH, SW, ZU 0501	ANY
(01)	MP....4	55.15.0515		KNOPF HOCH, GN, ZU 0501	ANY
(00)	MP....5	55.15.0510		KNOPF HOCH, SW, ZU 0501	ANY
(01)	MP....5	55.15.0515		KNOPF HOCH, GN, ZU 0501	ANY
(00)	MP....6	55.15.0510		KNOPF HOCH, SW, ZU 0501	ANY
(01)	MP....6	55.15.0515		KNOPF HOCH, GN, ZU 0501	ANY
(00)	MP....7	55.15.0510		KNOPF HOCH, SW, ZU 0501	ANY
(01)	MP....7	55.15.0515		KNOPF HOCH, GN, ZU 0501	ANY
(00)	MP....8	55.15.0510		KNOPF HOCH, SW, ZU 0501	ANY
(01)	MP....8	55.15.0515		KNOPF HOCH, GN, ZU 0501	ANY
	MP....9	55.15.0510		KNOPF HOCH, SW, ZU 0501	ANY
	MP...10	55.15.0510		KNOPF HOCH, SW, ZU 0501	ANY

IND.	POS.NO.	PART NO.	VALUE	SPECIFICATIONS / EQUIVALENT	MANUF.
	MP...11	55.15.0510		KNOPF HOCH, SW, ZU 0501	ANY
	MP...12	55.15.0510		KNOPF HOCH, SW, ZU 0501	ANY
	MP...13	55.15.0510		KNOPF HOCH, SW, ZU 0501	ANY
	MP...14	55.15.0510		KNOPF HOCH, SW, ZU 0501	ANY
	MP...15	55.15.0510		KNOPF HOCH, SW, ZU 0501	ANY
	MP...16	55.15.0510		KNOPF HOCH, SW, ZU 0501	ANY
(00)	MP...17	55.15.0510		KNOPF HOCH, SW, ZU 0501	ANY
(01)	MP...17	55.15.0519		KNOPF HOCH, WS, ZU 0501	ANY
(00)	MP...18	55.15.0510		KNOPF HOCH, SW, ZU 0501	ANY
(01)	MP...18	55.15.0519		KNOPF HOCH, WS, ZU 0501	ANY
(00)	MP...19	55.15.0510		KNOPF HOCH, SW, ZU 0501	ANY
(01)	MP...19	55.15.0519		KNOPF HOCH, WS, ZU 0501	ANY
(00)	MP...20	55.15.0510		KNOPF HOCH, SW, ZU 0501	ANY
(01)	MP...20	55.15.0519		KNOPF HOCH, WS, ZU 0501	ANY
(00)	MP...21	55.15.0510		KNOPF HOCH, SW, ZU 0501	ANY
(01)	MP...21	55.15.0519		KNOPF HOCH, WS, ZU 0501	ANY
(00)	MP...22	55.15.0510		KNOPF HOCH, SW, ZU 0501	ANY
(01)	MP...22	55.15.0519		KNOPF HOCH, WS, ZU 0501	ANY
(00)	MP...23	55.15.0510		KNOPF HOCH, SW, ZU 0501	ANY
(01)	MP...23	55.15.0519		KNOPF HOCH, WS, ZU 0501	ANY
(00)	MP...24	55.15.0510		KNOPF HOCH, SW, ZU 0501	ANY
(01)	MP...24	55.15.0519		KNOPF HOCH, WS, ZU 0501	ANY
(00)	MP...25	55.15.0510		KNOPF HOCH, SW, ZU 0501	ANY
(01)	MP...25	55.15.0515		KNOPF HOCH, GN, ZU 0501	ANY
(00)	MP...26	55.15.0510		KNOPF HOCH, SW, ZU 0501	ANY
(01)	MP...26	55.15.0515		KNOPF HOCH, GN, ZU 0501	ANY
(00)	MP...27	55.15.0510		KNOPF HOCH, SW, ZU 0501	ANY
(01)	MP...27	55.15.0515		KNOPF HOCH, GN, ZU 0501	ANY
(00)	MP...28	55.15.0510		KNOPF HOCH, SW, ZU 0501	ANY
(01)	MP...28	55.15.0515		KNOPF HOCH, GN, ZU 0501	ANY
(00)	MP...29	55.15.0510		KNOPF HOCH, SW, ZU 0501	ANY
(01)	MP...29	55.15.0515		KNOPF HOCH, GN, ZU 0501	ANY
(00)	MP...30	55.15.0510		KNOPF HOCH, SW, ZU 0501	ANY
(01)	MP...30	55.15.0515		KNOPF HOCH, GN, ZU 0501	ANY
(00)	MP...31	55.15.0510		KNOPF HOCH, SW, ZU 0501	ANY
(01)	MP...31	55.15.0515		KNOPF HOCH, GN, ZU 0501	ANY
(00)	MP...32	55.15.0510		KNOPF HOCH, SW, ZU 0501	ANY

IND.	POS.NO.	PART NO.	VALUE	SPECIFICATIONS / EQUIVALENT	MANUF.
(01)	MP...32	55.15.0515		KNOPF HOCH, GN, ZU 0501	ANY
	MP...33	55.15.0510		KNOPF HOCH, SW, ZU 0501	ANY
	MP...34	55.15.0510		KNOPF HOCH, SW, ZU 0501	ANY
	MP...35	55.15.0510		KNOPF HOCH, SW, ZU 0501	ANY
	MP...36	55.15.0510		KNOPF HOCH, SW, ZU 0501	ANY
	MP...37	55.15.0510		KNOPF HOCH, SW, ZU 0501	ANY
	MP...38	55.15.0510		KNOPF HOCH, SW, ZU 0501	ANY
	MP...39	55.15.0510		KNOPF HOCH, SW, ZU 0501	ANY
	MP...40	55.15.0510		KNOPF HOCH, SW, ZU 0501	ANY
(00)	MP...41	55.15.0510		KNOPF HOCH, SW, ZU 0501	ANY
(01)	MP...41	55.15.0519		KNOPF HOCH, WS, ZU 0501	ANY
(00)	MP...42	55.15.0510		KNOPF HOCH, SW, ZU 0501	ANY
(01)	MP...42	55.15.0519		KNOPF HOCH, WS, ZU 0501	ANY
(00)	MP...43	55.15.0510		KNOPF HOCH, SW, ZU 0501	ANY
(01)	MP...43	55.15.0519		KNOPF HOCH, WS, ZU 0501	ANY
(00)	MP...44	55.15.0510		KNOPF HOCH, SW, ZU 0501	ANY
(01)	MP...44	55.15.0519		KNOPF HOCH, WS, ZU 0501	ANY
(00)	MP...45	55.15.0510		KNOPF HOCH, SW, ZU 0501	ANY
(01)	MP...45	55.15.0519		KNOPF HOCH, WS, ZU 0501	ANY
(00)	MP...46	55.15.0510		KNOPF HOCH, SW, ZU 0501	ANY
(01)	MP...46	55.15.0519		KNOPF HOCH, WS, ZU 0501	ANY
(00)	MP...47	55.15.0510		KNOPF HOCH, SW, ZU 0501	ANY
(01)	MP...47	55.15.0519		KNOPF HOCH, WS, ZU 0501	ANY
(00)	MP...48	55.15.0510		KNOPF HOCH, SW, ZU 0501	ANY
(01)	MP...48	55.15.0519		KNOPF HOCH, WS, ZU 0501	ANY
	MP...49	1.320.603.11		CR CHANNEL KEYS PCB	ST
	MP...50	1.328.603.01		ETIKETTE	ST
	P.....1	54.14.4034		STECKER 34P, AKTION PIN	ANY
	S.....1	55.15.0501		KEY	ANY
	S.....2	55.15.0501		KEY	ANY
	S.....3	55.15.0501		KEY	ANY
	S.....4	55.15.0501		KEY	ANY
	S.....5	55.15.0501		KEY	ANY
	S.....6	55.15.0501		KEY	ANY
	S.....7	55.15.0501		KEY	ANY

IND.	POS.NO.	PART NO.	VALUE	SPECIFICATIONS / EQUIVALENT	MANUF.
	S.....8	55.15.0501		KEY	ANY
	S.....9	55.15.0501		KEY	ANY
	S....10	55.15.0501		KEY	ANY
	S....11	55.15.0501		KEY	ANY
	S....12	55.15.0501		KEY	ANY
	S....13	55.15.0501		KEY	ANY
	S....14	55.15.0501		KEY	ANY
	S....15	55.15.0501		KEY	ANY
	S....16	55.15.0501		KEY	ANY
	S....17	55.15.0501		KEY	ANY
	S....18	55.15.0501		KEY	ANY
	S....19	55.15.0501		KEY	ANY
	S....20	55.15.0501		KEY	ANY
	S....21	55.15.0501		KEY	ANY
	S....22	55.15.0501		KEY	ANY
	S....23	55.15.0501		KEY	ANY
	S....24	55.15.0501		KEY	ANY
	S....25	55.15.0501		KEY	ANY
	S....26	55.15.0501		KEY	ANY
	S....27	55.15.0501		KEY	ANY
	S....28	55.15.0501		KEY	ANY
	S....29	55.15.0501		KEY	ANY
	S....30	55.15.0501		KEY	ANY
	S....31	55.15.0501		KEY	ANY
	S....32	55.15.0501		KEY	ANY
	S....33	55.15.0501		KEY	ANY
	S....34	55.15.0501		KEY	ANY
	S....35	55.15.0501		KEY	ANY
	S....36	55.15.0501		KEY	ANY
	S....37	55.15.0501		KEY	ANY
	S....38	55.15.0501		KEY	ANY
	S....39	55.15.0501		KEY	ANY
	S....40	55.15.0501		KEY	ANY
	S....41	55.15.0501		KEY	ANY
	S....42	55.15.0501		KEY	ANY
	S....43	55.15.0501		KEY	ANY
	S....44	55.15.0501		KEY	ANY

IND.	POS.NO.	PART NO.	VALUE	SPECIFICATIONS / EQUIVALENT	MANUF.
	S....45	55.15.0501		KEY	ANY
	S....46	55.15.0501		KEY	ANY
	S....47	55.15.0501		KEY	ANY
	S....48	55.15.0501		KEY	ANY
	XDL...1	1.862.813.03		LED-ABSTANDSHALTER	ANY
	XDL...2	1.862.813.03		LED-ABSTANDSHALTER	ANY
	XDL...3	1.862.813.03		LED-ABSTANDSHALTER	ANY
	XDL...4	1.862.813.03		LED-ABSTANDSHALTER	ANY
	XDL...5	1.862.813.03		LED-ABSTANDSHALTER	ANY
	XDL...6	1.862.813.03		LED-ABSTANDSHALTER	ANY
	XDL...7	1.862.813.03		LED-ABSTANDSHALTER	ANY
	XDL...8	1.862.813.03		LED-ABSTANDSHALTER	ANY
	XDL..25	1.862.813.03		LED-ABSTANDSHALTER	ANY
	XDL..26	1.862.813.03		LED-ABSTANDSHALTER	ANY
	XDL..27	1.862.813.03		LED-ABSTANDSHALTER	ANY
	XDL..28	1.862.813.03		LED-ABSTANDSHALTER	ANY
	XDL..29	1.862.813.03		LED-ABSTANDSHALTER	ANY
	XDL..30	1.862.813.03		LED-ABSTANDSHALTER	ANY
	XDL..31	1.862.813.03		LED-ABSTANDSHALTER	ANY
	XDL..32	1.862.813.03		LED-ABSTANDSHALTER	ANY
	XDL..41	1.862.813.03		LED-ABSTANDSHALTER	ANY
	XDL..42	1.862.813.03		LED-ABSTANDSHALTER	ANY
	XDL..43	1.862.813.03		LED-ABSTANDSHALTER	ANY
	XDL..44	1.862.813.03		LED-ABSTANDSHALTER	ANY
	XDL..45	1.862.813.03		LED-ABSTANDSHALTER	ANY
	XDL..46	1.862.813.03		LED-ABSTANDSHALTER	ANY
	XDL..47	1.862.813.03		LED-ABSTANDSHALTER	ANY
	XDL..48	1.862.813.03		LED-ABSTANDSHALTER	ANY
	XDL..65	1.862.813.03		LED-ABSTANDSHALTER	ANY
	XDL..66	1.862.813.03		LED-ABSTANDSHALTER	ANY
	XDL..67	1.862.813.03		LED-ABSTANDSHALTER	ANY
	XDL..68	1.862.813.03		LED-ABSTANDSHALTER	ANY
	XDL..69	1.862.813.03		LED-ABSTANDSHALTER	ANY
	XDL..70	1.862.813.03		LED-ABSTANDSHALTER	ANY
	XDL..71	1.862.813.03		LED-ABSTANDSHALTER	ANY
	XDL..72	1.862.813.03		LED-ABSTANDSHALTER	ANY

IND.	POS.NO.	PART NO.	VALUE	SPECIFICATIONS / EQUIVALENT	MANUF.

REMARKS: (01) 06.09.90 LAR MP 1-48

MANUFACTURERS:
St = STUDER / Ph = PHILIPS / So = SONY

ABBREVIATIONS:
CER = CERAMIC / FILM = FILM TYPE / XF = CLAMP FOR FUSES /
XIC = IC SOCKET

ORIG 89/09/14 (01) 90/09/06

BLOCKDIAGRAM AUTOLOCATOR & SMEM CONTROLLER

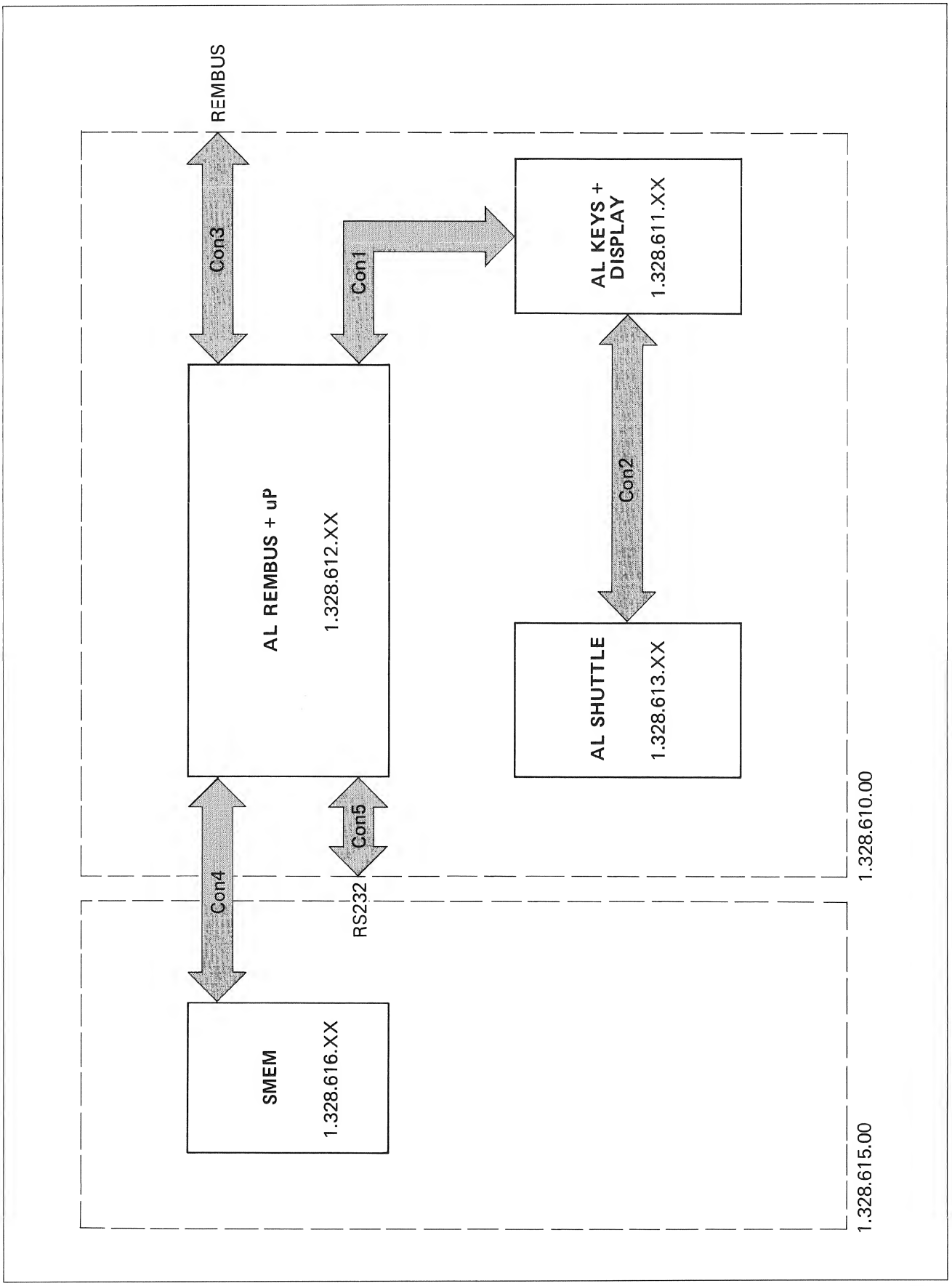

BLOCKDIAGRAM STABILIZER 5V/4A (REMOTES)

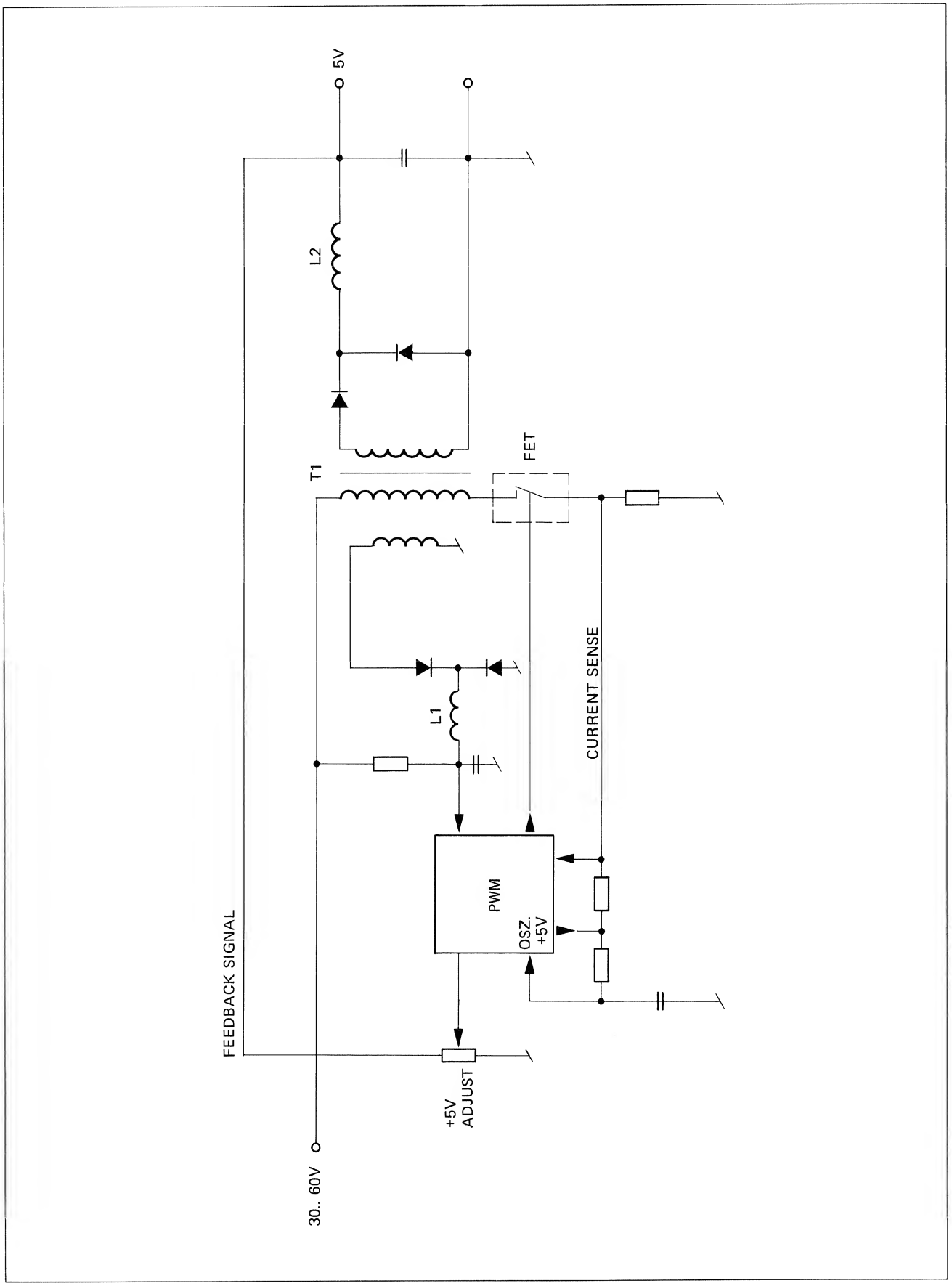

AL KEYS + DISPLAY 1.328.611.00

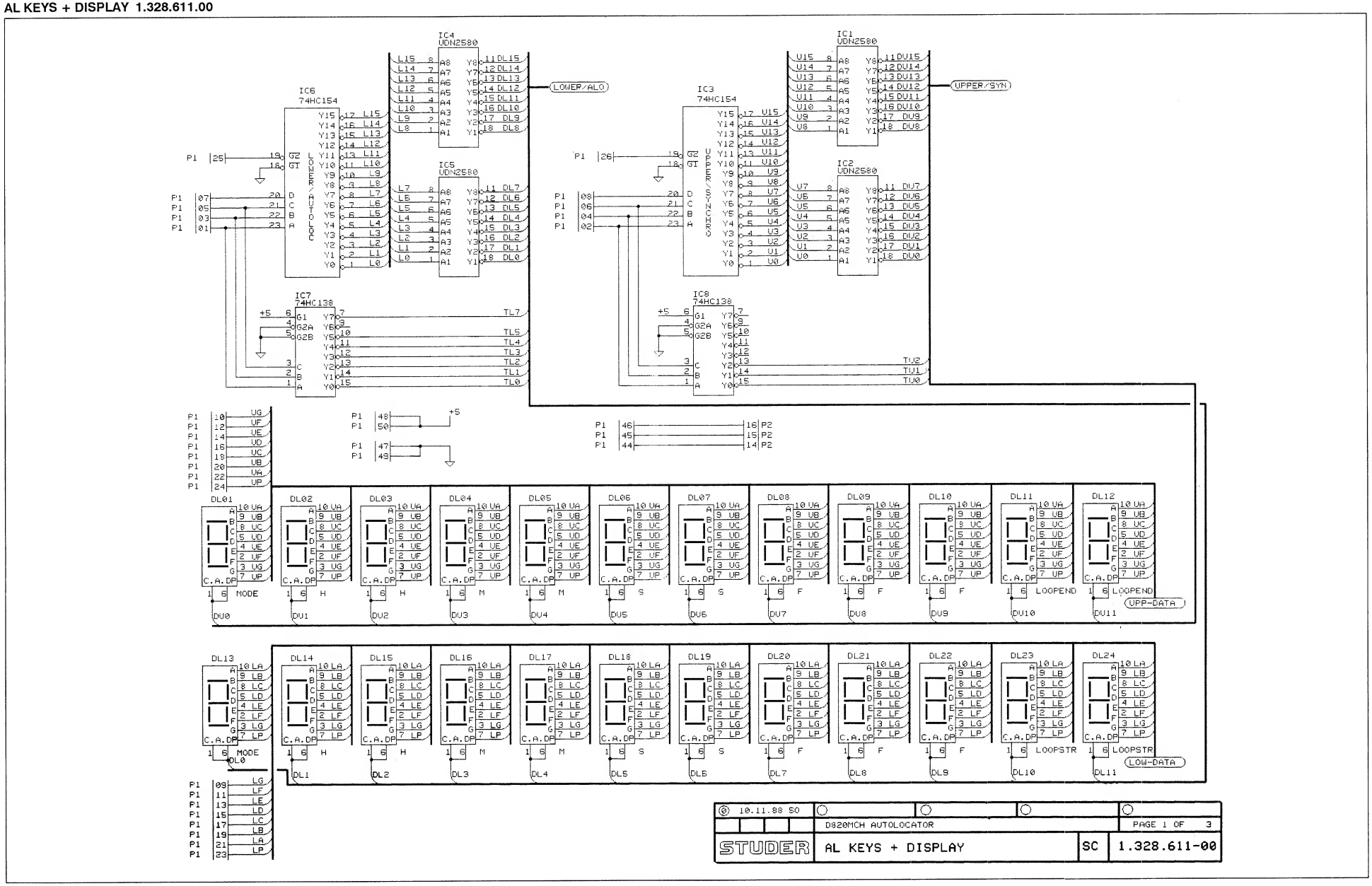

AL KEYS + DISPLAY 1.328.611.00

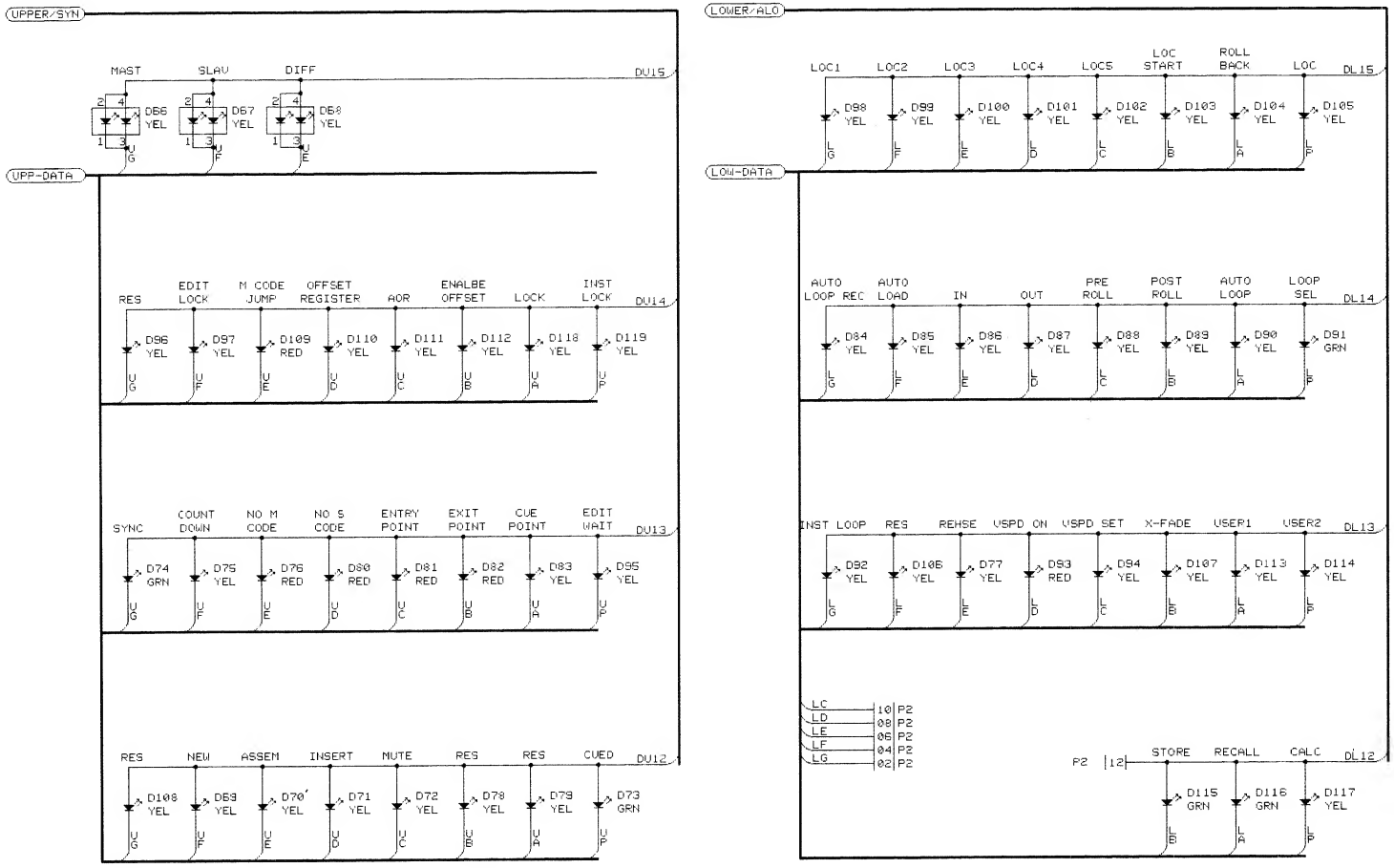

10.11.88 SO				
	D820MCH AUTOLOCATOR			PAGE 2 OF 3
STUDER	AL KEYS + DISPLAY		SC	1.328.611-00

AL KEYS + DISPLAY 1.328.611.00

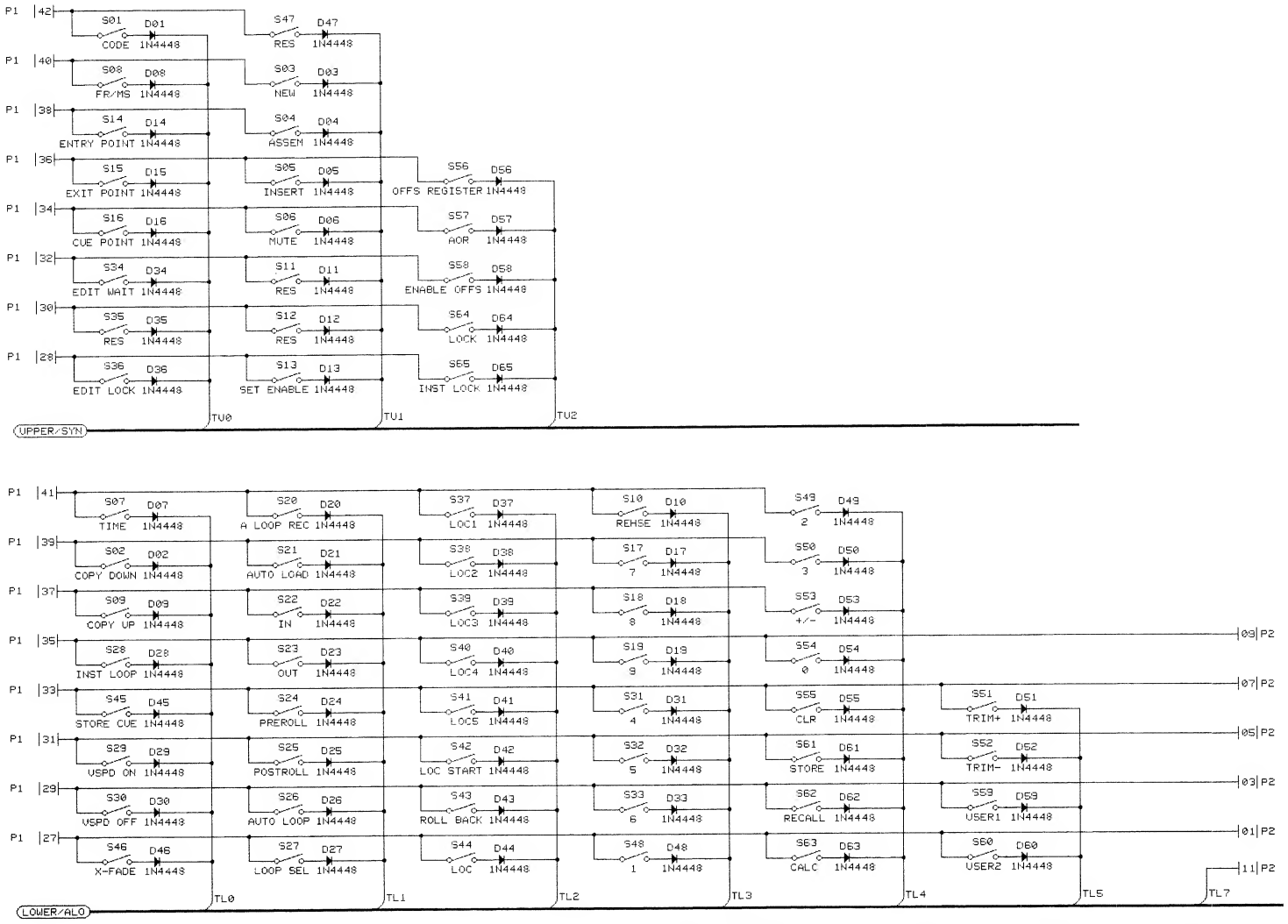

AL KEYS + DISPLAY 1.328.611.00

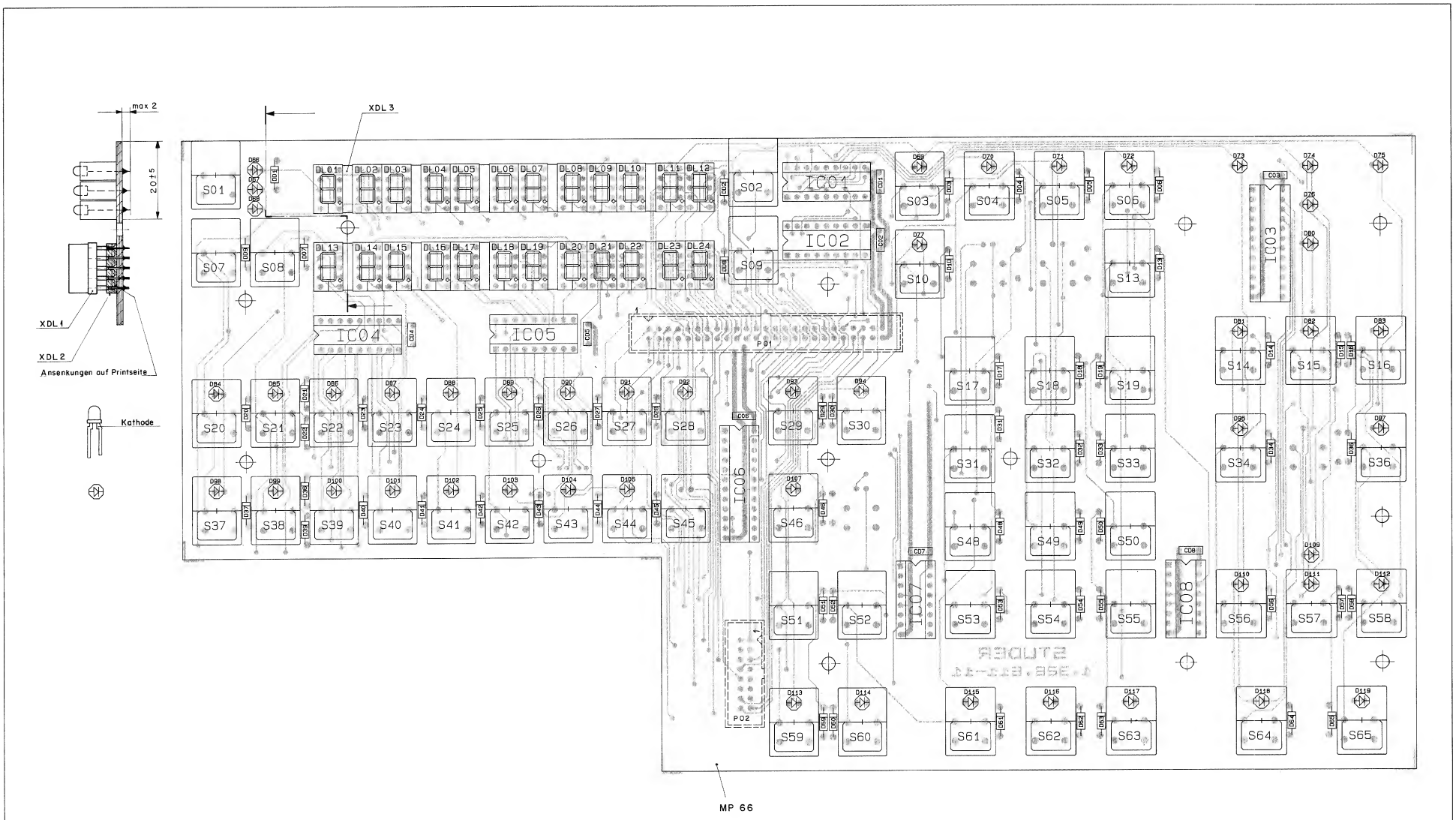

AL KEYS + DISPLAY 1.328.611.00

IND.	POS.NO.	PART NO.	VALUE	SPECIFICATIONS / EQUIVALENT	MANUF.
	C.....1	59.06.0683	68nF	10%, 63V, PETP	ANY
	C.....2	59.06.0683	68nF	10%, 63V, PETP	ANY
	C.....3	59.06.0683	68nF	10%, 63V, PETP	ANY
	C.....4	59.06.0683	68nF	10%, 63V, PETP	ANY
	C.....5	59.06.0683	68nF	10%, 63V, PETP	ANY
	C.....6	59.06.0683	68nF	10%, 63V, PETP	ANY
	C.....7	59.06.0683	68nF	10%, 63V, PETP	ANY
	C.....8	59.06.0683	68nF	10%, 63V, PETP	ANY
	D.....1	50.04.0125	1N 4448		ANY
	D.....2	50.04.0125	1N 4448		ANY
	D.....3	50.04.0125	1N 4448		ANY
	D.....4	50.04.0125	1N 4448		ANY
	D.....5	50.04.0125	1N 4448		ANY
	D.....6	50.04.0125	1N 4448		ANY
	D.....7	50.04.0125	1N 4448		ANY
	D.....8	50.04.0125	1N 4448		ANY
	D.....9	50.04.0125	1N 4448		ANY
	D....10	50.04.0125	1N 4448		ANY
	D....13	50.04.0125	1N 4448		ANY
	D....14	50.04.0125	1N 4448		ANY
	D....15	50.04.0125	1N 4448		ANY
	D....16	50.04.0125	1N 4448		ANY
	D....17	50.04.0125	1N 4448		ANY
	D....18	50.04.0125	1N 4448		ANY
	D....19	50.04.0125	1N 4448		ANY
	D....20	50.04.0125	1N 4448		ANY
	D....21	50.04.0125	1N 4448		ANY
	D....22	50.04.0125	1N 4448		ANY
	D....23	50.04.0125	1N 4448		ANY
	D....24	50.04.0125	1N 4448		ANY
	D....25	50.04.0125	1N 4448		ANY
	D....26	50.04.0125	1N 4448		ANY
	D....27	50.04.0125	1N 4448		ANY
	D....28	50.04.0125	1N 4448		ANY
	D....29	50.04.0125	1N 4448		ANY
	D....30	50.04.0125	1N 4448		ANY

S T U D E R (02) 90/09/06 LAR AL KEYS + DISPLAY, ESE PL 1.328.611.00 PAGE 1

IND.	POS.NO.	PART NO.	VALUE	SPECIFICATIONS / EQUIVALENT	MANUF.
	D....31	50.04.0125	1N 4448		ANY
	D....32	50.04.0125	1N 4448		ANY
	D....33	50.04.0125	1N 4448		ANY
	D....34	50.04.0125	1N 4448		ANY
	D....36	50.04.0125	1N 4448		ANY
	D....37	50.04.0125	1N 4448		ANY
	D....38	50.04.0125	1N 4448		ANY
	D....39	50.04.0125	1N 4448		ANY
	D....40	50.04.0125	1N 4448		ANY
	D....41	50.04.0125	1N 4448		ANY
	D....42	50.04.0125	1N 4448		ANY
	D....43	50.04.0125	1N 4448		ANY
	D....44	50.04.0125	1N 4448		ANY
	D....45	50.04.0125	1N 4448		ANY
	D....46	50.04.0125	1N 4448		ANY
	D....48	50.04.0125	1N 4448		ANY
	D....49	50.04.0125	1N 4448		ANY
	D....50	50.04.0125	1N 4448		ANY
	D....51	50.04.0125	1N 4448		ANY
	D....52	50.04.0125	1N 4448		ANY
	D....53	50.04.0125	1N 4448		ANY
	D....54	50.04.0125	1N 4448		ANY
	D....55	50.04.0125	1N 4448		ANY
	D....56	50.04.0125	1N 4448		ANY
	D....57	50.04.0125	1N 4448		ANY
	D....58	50.04.0125	1N 4448		ANY
	D....59	50.04.0125	1N 4448		ANY
	D....60	50.04.0125	1N 4448		ANY
	D....61	50.04.0125	1N 4448		ANY
	D....62	50.04.0125	1N 4448		ANY
	D....63	50.04.0125	1N 4448		ANY
	D....64	50.04.0125	1N 4448		ANY
	D....65	50.04.0125	1N 4448		ANY
	D....66	50.04.2152	HLMP-1440	GB KLAR	ANY
	D....67	50.04.2152	HLMP-1440	GB KLAR	ANY
	D....68	50.04.2152	HLMP-1440	GB KLAR	ANY
	D....69	50.04.2152	HLMP-1440	GB KLAR	ANY

S T U D E R (02) 90/09/06 LAR AL KEYS + DISPLAY, ESE PL 1.328.611.00 PAGE 2

IND.	POS.NO.	PART NO.	VALUE	SPECIFICATIONS / EQUIVALENT	MANUF.
	D....70	50.04.2152	HLMP-1440	GB KLAR	ANY
	D....71	50.04.2152	HLMP-1440	GB KLAR	ANY
	D....72	50.04.2152	HLMP-1440	GB KLAR	ANY
	D....73	50.04.2162	HLMP-1540	GN KLAR	ANY
	D....74	50.04.2162	HLMP-1540	GN KLAR	ANY
	D....75	50.04.2152	HLMP-1440	GB KLAR	ANY
	D....76	50.04.2129	LS 3160	RT DIFF	ANY
	D....77	50.04.2152	HLMP-1440	GB KLAR	ANY
	D....80	50.04.2129	LS 3160	RT DIFF	ANY
	D....81	50.04.2129	LS 3160	RT DIFF	ANY
	D....82	50.04.2129	LS 3160	RT DIFF	ANY
	D....83	50.04.2152	HLMP-1440	GB KLAR	ANY
	D....84	50.04.2152	HLMP-1440	GB KLAR	ANY
	D....85	50.04.2152	HLMP-1440	GB KLAR	ANY
	D....86	50.04.2152	HLMP-1440	GB KLAR	ANY
	D....87	50.04.2152	HLMP-1440	GB KLAR	ANY
	D....88	50.04.2152	HLMP-1440	GB KLAR	ANY
	D....89	50.04.2152	HLMP-1440	GB KLAR	ANY
	D....90	50.04.2152	HLMP-1440	GB KLAR	ANY
	D....91	50.04.2162	HLMP-1540	GN KLAR	ANY
	D....92	50.04.2152	HLMP-1440	GB KLAR	ANY
	D....93	50.04.2129	LS 3160	RT DIFF	ANY
	D....94	50.04.2152	HLMP-1440	GB KLAR	ANY
	D....95	50.04.2152	HLMP-1440	GB KLAR	ANY
	D....97	50.04.2152	HLMP-1440	GB KLAR	ANY
	D....98	50.04.2152	HLMP-1440	GB KLAR	ANY
	D....99	50.04.2152	HLMP-1440	GB KLAR	ANY
	D...100	50.04.2152	HLMP-1440	GB KLAR	ANY
	D...101	50.04.2152	HLMP-1440	GB KLAR	ANY
	D...102	50.04.2152	HLMP-1440	GB KLAR	ANY
	D...103	50.04.2152	HLMP-1440	GB KLAR	ANY
	D...104	50.04.2152	HLMP-1440	GB KLAR	ANY
	D...105	50.04.2152	HLMP-1440	GB KLAR	ANY
	D...107	50.04.2152	HLMP-1440	GB KLAR	ANY
	D...109	50.04.2129	LS 3160	RT DIFF	ANY
	D...110	50.04.2152	HLMP-1440	GB KLAR	ANY
	D...111	50.04.2152	HLMP-1440	GB KLAR	ANY

S T U D E R (02) 90/09/06 LAR AL KEYS + DISPLAY, ESE PL 1.328.611.00 PAGE 3

IND.	POS.NO.	PART NO.	VALUE	SPECIFICATIONS / EQUIVALENT	MANUF.
	D...112	50.04.2152	HLMP-1440	GB KLAR	ANY
	D...113	50.04.2152	HLMP-1440	GB KLAR	ANY
	D...114	50.04.2152	HLMP-1440	GB KLAR	ANY
	D...115	50.04.2162	HLMP-1540	GN KLAR	ANY
	D...116	50.04.2162	HLMP-1540	GN KLAR	ANY
	D...117	50.04.2152	HLMP-1440	GB KLAR	ANY
	D...118	50.04.2152	HLMP-1440	GB KLAR	ANY
	D...119	50.04.2152	HLMP-1440	GB KLAR	ANY
	DL....1	73.01.0132	7-SEGMENT	RT, 7.6MM, C.A	ANY
	DL....2	73.01.0132	7-SEGMENT	RT, 7.6MM, C.A	ANY
	DL....3	73.01.0132	7-SEGMENT	RT, 7.6MM, C.A	ANY
	DL....4	73.01.0132	7-SEGMENT	RT, 7.6MM, C.A	ANY
	DL....5	73.01.0132	7-SEGMENT	RT, 7.6MM, C.A	ANY
	DL....6	73.01.0132	7-SEGMENT	RT, 7.6MM, C.A	ANY
	DL....7	73.01.0132	7-SEGMENT	RT, 7.6MM, C.A	ANY
	DL....8	73.01.0132	7-SEGMENT	RT, 7.6MM, C.A	ANY
	DL....9	73.01.0132	7-SEGMENT	RT, 7.6MM, C.A	ANY
	DL...10	73.01.0132	7-SEGMENT	RT, 7.6MM, C.A	ANY
	DL...11	73.01.0132	7-SEGMENT	RT, 7.6MM, C.A	ANY
	DL...12	73.01.0132	7-SEGMENT	RT, 7.6MM, C.A	ANY
	DL...13	73.01.0132	7-SEGMENT	RT, 7.6MM, C.A	ANY
	DL...14	73.01.0132	7-SEGMENT	RT, 7.6MM, C.A	ANY
	DL...15	73.01.0132	7-SEGMENT	RT, 7.6MM, C.A	ANY
	DL...16	73.01.0132	7-SEGMENT	RT, 7.6MM, C.A	ANY
	DL...17	73.01.0132	7-SEGMENT	RT, 7.6MM, C.A	ANY
	DL...18	73.01.0132	7-SEGMENT	RT, 7.6MM, C.A	ANY
	DL...19	73.01.0132	7-SEGMENT	RT, 7.6MM, C.A	ANY
	DL...20	73.01.0132	7-SEGMENT	RT, 7.6MM, C.A	ANY
	DL...21	73.01.0132	7-SEGMENT	RT, 7.6MM, C.A	ANY
	DL...22	73.01.0132	7-SEGMENT	RT, 7.6MM, C.A	ANY
	DL...23	73.01.0132	7-SEGMENT	RT, 7.6MM, C.A	ANY
	DL...24	73.01.0132	7-SEGMENT	RT, 7.6MM, C.A	ANY
	IC....1	50.11.0202	UDN 2580		ANY
	IC....2	50.11.0202	UDN 2580		ANY
	IC....3	50.17.1154	74 HC 154		ANY

S T U D E R (02) 90/09/06 LAR AL KEYS + DISPLAY, ESE PL 1.328.611.00 PAGE 4

IND.	POS.NO.	PART NO.	VALUE	SPECIFICATIONS / EQUIVALENT	MANUF.
	IC....4	50.11.0202	UDN 2580		ANY
	IC....5	50.11.0202	UDN 2580		ANY
	IC....6	50.17.1154	74 HC 154		ANY
	IC....7	50.17.1138	74 HC 138		ANY
	IC....8	50.17.1138	74 HC 138		ANY
	MP....1	55.15.0510	KNOPF	SW, ZU 0501	ANY
	MP....2	55.15.0510	KNOPF	SW, ZU 0501	ANY
	MP....3	55.15.0510	KNOPF	SW, ZU 0501	ANY
	MP....4	55.15.0510	KNOPF	SW, ZU 0501	ANY
	MP....5	55.15.0510	KNOPF	SW, ZU 0501	ANY
	MP....6	55.15.0510	KNOPF	SW, ZU 0501	ANY
	MP....7	55.15.0510	KNOPF	SW, ZU 0501	ANY
	MP....8	55.15.0510	KNOPF	SW, ZU 0501	ANY
	MP....9	55.15.0510	KNOPF	SW, ZU 0501	ANY
(00)	MP...10	55.15.0510	KNOPF	SW, ZU 0501	ANY
(02)	MP...10	55.15.0513	KNOPF	OR, ZU 0501	ANY
(00)	MP...13	55.15.0510	KNOPF	SW, ZU 0501	ANY
(02)	MP...13	55.15.0512	KNOPF	RT, ZU 0501	ANY
	MP...14	55.15.0510	KNOPF	SW, ZU 0501	ANY
	MP...15	55.15.0510	KNOPF	SW, ZU 0501	ANY
	MP...16	55.15.0510	KNOPF	SW, ZU 0501	ANY
(00)	MP...17	55.15.0510	KNOPF	SW, ZU 0501	ANY
(02)	MP...17	55.15.0519	KNOPF	WS, ZU 0501	ANY
(00)	MP...18	55.15.0510	KNOPF	SW, ZU 0501	ANY
(02)	MP...18	55.15.0519	KNOPF	WS, ZU 0501	ANY
(00)	MP...19	55.15.0510	KNOPF	SW, ZU 0501	ANY
(02)	MP...19	55.15.0519	KNOPF	WS, ZU 0501	ANY
	MP...20	55.15.0510	KNOPF	SW, ZU 0501	ANY
	MP...21	55.15.0510	KNOPF	SW, ZU 0501	ANY
	MP...22	55.15.0510	KNOPF	SW, ZU 0501	ANY
	MP...23	55.15.0510	KNOPF	SW, ZU 0501	ANY
	MP...24	55.15.0510	KNOPF	SW, ZU 0501	ANY
	MP...25	55.15.0510	KNOPF	SW, ZU 0501	ANY
	MP...26	55.15.0510	KNOPF	SW, ZU 0501	ANY
	MP...27	55.15.0510	KNOPF	SW, ZU 0501	ANY
	MP...28	55.15.0510	KNOPF	SW, ZU 0501	ANY

S T U D E R (02) 90/09/06 LAR AL KEYS + DISPLAY, ESE PL 1.328.611.00 PAGE 5

IND.	POS.NO.	PART NO.	VALUE	SPECIFICATIONS / EQUIVALENT	MANUF.
	MP...29	55.15.0510	KNOPF	SW, ZU 0501	ANY
	MP...30	55.15.0510	KNOPF	SW, ZU 0501	ANY
(00)	MP...31	55.15.0510	KNOPF	SW, ZU 0501	ANY
(02)	MP...31	55.15.0519	KNOPF	WS, ZU 0501	ANY
(00)	MP...32	55.15.0510	KNOPF	SW, ZU 0501	ANY
(02)	MP...32	55.15.0519	KNOPF	WS, ZU 0501	ANY
(00)	MP...33	55.15.0510	KNOPF	SW, ZU 0501	ANY
(02)	MP...33	55.15.0519	KNOPF	WS, ZU 0501	ANY
	MP...34	55.15.0510	KNOPF	SW, ZU 0501	ANY
	MP...36	55.15.0510	KNOPF	SW, ZU 0501	ANY
(00)	MP...37	55.15.0510	KNOPF	SW, ZU 0501	ANY
(02)	MP...37	55.15.0518	KNOPF	GR, ZU 0501	ANY
(00)	MP...38	55.15.0510	KNOPF	SW, ZU 0501	ANY
(02)	MP...38	55.15.0518	KNOPF	GR, ZU 0501	ANY
(00)	MP...39	55.15.0510	KNOPF	SW, ZU 0501	ANY
(02)	MP...39	55.15.0518	KNOPF	GR, ZU 0501	ANY
(00)	MP...40	55.15.0510	KNOPF	SW, ZU 0501	ANY
(02)	MP...40	55.15.0518	KNOPF	GR, ZU 0501	ANY
(00)	MP...41	55.15.0510	KNOPF	SW, ZU 0501	ANY
(02)	MP...41	55.15.0518	KNOPF	GR, ZU 0501	ANY
(00)	MP...42	55.15.0510	KNOPF	SW, ZU 0501	ANY
(02)	MP...42	55.15.0518	KNOPF	GR, ZU 0501	ANY
(00)	MP...43	55.15.0510	KNOPF	SW, ZU 0501	ANY
(02)	MP...43	55.15.0518	KNOPF	GR, ZU 0501	ANY
(00)	MP...44	55.15.0510	KNOPF	SW, ZU 0501	ANY
(02)	MP...44	55.15.0518	KNOPF	GR, ZU 0501	ANY
(00)	MP...45	55.15.0510	KNOPF	SW, ZU 0501	ANY
(02)	MP...45	55.15.0512	KNOPF	RT, ZU 0501	ANY
	MP...46	55.15.0510	KNOPF	SW, ZU 0501	ANY
(00)	MP...48	55.15.0510	KNOPF	SW, ZU 0501	ANY
(02)	MP...48	55.15.0519	KNOPF	WS, ZU 0501	ANY
(00)	MP...49	55.15.0510	KNOPF	SW, ZU 0501	ANY
(02)	MP...49	55.15.0519	KNOPF	WS, ZU 0501	ANY
(00)	MP...50	55.15.0510	KNOPF	SW, ZU 0501	ANY
(02)	MP...50	55.15.0519	KNOPF	WS, ZU 0501	ANY
	MP...51	55.15.0510	KNOPF	SW, ZU 0501	ANY
	MP...52	55.15.0510	KNOPF	SW, ZU 0501	ANY

S T U D E R (02) 90/09/06 LAR AL KEYS + DISPLAY, ESE PL 1.328.611.00 PAGE 6

AL KEYS + DISPLAY 1.328.611.00

IND.	POS.NO.	PART NO.	VALUE	SPECIFICATIONS / EQUIVALENT	MANUF.
(00)	MP...53	55.15.0510	KNOPF	SW, ZU 0501	ANY
(02)	MP...53	55.15.0518	KNOPF	GR, ZU 0501	ANY
(00)	MP...54	55.15.0510	KNOPF	SW, ZU 0501	ANY
(02)	MP...54	55.15.0519	KNOPF	WS, ZU 0501	ANY
(00)	MP...55	55.15.0510	KNOPF	SW, ZU 0501	ANY
(02)	MP...55	55.15.0518	KNOPF	GR, ZU 0501	ANY
	MP...56	55.15.0510	KNOPF	SW, ZU 0501	ANY
	MP...57	55.15.0510	KNOPF	SW, ZU 0501	ANY
	MP...58	55.15.0510	KNOPF	SW, ZU 0501	ANY
(00)	MP...59	55.15.0510	KNOPF	SW, ZU 0501	ANY
(02)	MP...59	55.15.0518	KNOPF	GR, ZU 0501	ANY
(00)	MP...60	55.15.0510	KNOPF	SW, ZU 0501	ANY
(02)	MP...60	55.15.0518	KNOPF	GR, ZU 0501	ANY
	MP...61	55.15.0510	KNOPF	SW, ZU 0501	ANY
	MP...62	55.15.0510	KNOPF	SW, ZU 0501	ANY
	MP...63	55.15.0510	KNOPF	SW, ZU 0501	ANY
(00)	MP...64	55.15.0510	KNOPF	SW, ZU 0501	ANY
(02)	MP...64	55.15.0512	KNOPF	RT, ZU 0501	ANY
(00)	MP...65	55.15.0510	KNOPF	SW, ZU 0501	ANY
(02)	MP...65	55.15.0512	KNOPF	RT, ZU 0501	ANY
	MP...66	1.328.611.11		PRINT	ST
	MP...67	1.328.611.01		ETIKETTE	ST
	MP...68	43.01.0108		ESE-Warnschild	ANY
	XD...66	1.862.813.03		DIODENABSTANDSHALTER	ST
	XD...67	1.862.813.03		DIODENABSTANDSHALTER	ST
	XD...68	1.862.813.03		DIODENABSTANDSHALTER	ST
	XD...73	1.862.813.03		DIODENABSTANDSHALTER	ST
	XD...74	1.862.813.03		DIODENABSTANDSHALTER	ST
	XD...75	1.862.813.03		DIODENABSTANDSHALTER	ST
	XD...76	1.862.813.03		DIODENABSTANDSHALTER	ST
	XD...80	1.862.813.03		DIODENABSTANDSHALTER	ST
	XD..109	1.862.813.03		DIODENABSTANDSHALTER	ST
(00)	P.....1	54.14.2005	STECKER	50 PIN,LOETSEITE	ANY
(01)	P.....1	54.14.4050	STECKER	50 PIN,LOETSEITE,ACTION PIN	ANY
(00)	P.....2	54.14.2002	STECKER	16 PIN,LOETSEITE	ANY

IND.	POS.NO.	PART NO.	VALUE	SPECIFICATIONS / EQUIVALENT	MANUF.
(01)	P.....2	54.14.4016	STECKER	16 PIN,LOETSEITE,ACTION PIN	ANY
	S.....1	55.15.0501	TASTE	1U, OHNE KNOPF	ANY
	S.....2	55.15.0501	TASTE	1U, OHNE KNOPF	ANY
	S.....3	55.15.0501	TASTE	1U, OHNE KNOPF	ANY
	S.....4	55.15.0501	TASTE	1U, OHNE KNOPF	ANY
	S.....5	55.15.0501	TASTE	1U, OHNE KNOPF	ANY
	S.....6	55.15.0501	TASTE	1U, OHNE KNOPF	ANY
	S.....7	55.15.0501	TASTE	1U, OHNE KNOPF	ANY
	S.....8	55.15.0501	TASTE	1U, OHNE KNOPF	ANY
	S.....9	55.15.0501	TASTE	1U, OHNE KNOPF	ANY
	S....10	55.15.0501	TASTE	1U, OHNE KNOPF	ANY
	S....13	55.15.0501	TASTE	1U, OHNE KNOPF	ANY
	S....14	55.15.0501	TASTE	1U, OHNE KNOPF	ANY
	S....15	55.15.0501	TASTE	1U, OHNE KNOPF	ANY
	S....16	55.15.0501	TASTE	1U, OHNE KNOPF	ANY
	S....17	55.15.0501	TASTE	1U, OHNE KNOPF	ANY
	S....18	55.15.0501	TASTE	1U, OHNE KNOPF	ANY
	S....19	55.15.0501	TASTE	1U, OHNE KNOPF	ANY
	S....20	55.15.0501	TASTE	1U, OHNE KNOPF	ANY
	S....21	55.15.0501	TASTE	1U, OHNE KNOPF	ANY
	S....22	55.15.0501	TASTE	1U, OHNE KNOPF	ANY
	S....23	55.15.0501	TASTE	1U, OHNE KNOPF	ANY
	S....24	55.15.0501	TASTE	1U, OHNE KNOPF	ANY
	S....25	55.15.0501	TASTE	1U, OHNE KNOPF	ANY
	S....26	55.15.0501	TASTE	1U, OHNE KNOPF	ANY
	S....27	55.15.0501	TASTE	1U, OHNE KNOPF	ANY
	S....28	55.15.0501	TASTE	1U, OHNE KNOPF	ANY
	S....29	55.15.0501	TASTE	1U, OHNE KNOPF	ANY
	S....30	55.15.0501	TASTE	1U, OHNE KNOPF	ANY
	S....31	55.15.0501	TASTE	1U, OHNE KNOPF	ANY
	S....32	55.15.0501	TASTE	1U, OHNE KNOPF	ANY
	S....33	55.15.0501	TASTE	1U, OHNE KNOPF	ANY
	S....34	55.15.0501	TASTE	1U, OHNE KNOPF	ANY
	S....36	55.15.0501	TASTE	1U, OHNE KNOPF	ANY
	S....37	55.15.0501	TASTE	1U, OHNE KNOPF	ANY
	S....38	55.15.0501	TASTE	1U, OHNE KNOPF	ANY

IND.	POS.NO.	PART NO.	VALUE	SPECIFICATIONS / EQUIVALENT	MANUF.
	S....39	55.15.0501	TASTE	1U, OHNE KNOPF	ANY
	S....40	55.15.0501	TASTE	1U, OHNE KNOPF	ANY
	S....41	55.15.0501	TASTE	1U, OHNE KNOPF	ANY
	S....42	55.15.0501	TASTE	1U, OHNE KNOPF	ANY
	S....43	55.15.0501	TASTE	1U, OHNE KNOPF	ANY
	S....44	55.15.0501	TASTE	1U, OHNE KNOPF	ANY
	S....45	55.15.0501	TASTE	1U, OHNE KNOPF	ANY
	S....46	55.15.0501	TASTE	1U, OHNE KNOPF	ANY
	S....48	55.15.0501	TASTE	1U, OHNE KNOPF	ANY
	S....49	55.15.0501	TASTE	1U, OHNE KNOPF	ANY
	S....50	55.15.0501	TASTE	1U, OHNE KNOPF	ANY
	S....51	55.15.0501	TASTE	1U, OHNE KNOPF	ANY
	S....52	55.15.0501	TASTE	1U, OHNE KNOPF	ANY
	S....53	55.15.0501	TASTE	1U, OHNE KNOPF	ANY
	S....54	55.15.0501	TASTE	1U, OHNE KNOPF	ANY
	S....55	55.15.0501	TASTE	1U, OHNE KNOPF	ANY
	S....56	55.15.0501	TASTE	1U, OHNE KNOPF	ANY
	S....57	55.15.0501	TASTE	1U, OHNE KNOPF	ANY
	S....58	55.15.0501	TASTE	1U, OHNE KNOPF	ANY
	S....59	55.15.0501	TASTE	1U, OHNE KNOPF	ANY
	S....60	55.15.0501	TASTE	1U, OHNE KNOPF	ANY
	S....61	55.15.0501	TASTE	1U, OHNE KNOPF	ANY
	S....62	55.15.0501	TASTE	1U, OHNE KNOPF	ANY
	S....63	55.15.0501	TASTE	1U, OHNE KNOPF	ANY
	S....64	55.15.0501	TASTE	1U, OHNE KNOPF	ANY
	S....65	55.15.0501	TASTE	1U, OHNE KNOPF	ANY
	XDL...1	53.03.0228	SIL SOCK.	*** QTY 240 ***	ANY
	XDL...2	1.328.611.02	UNTERLAGE	FUER 7-SEGMENT	ST
	XDL...3	1.328.611.02	UNTERLAGE	FUER 7-SEGMENT	ST

IND.	POS.NO.	PART NO.	VALUE	SPECIFICATIONS / EQUIVALENT	MANUF.

REMARKS: (02) 06.09.90 LAR MP 1-65

MANUFACTURERS:
ST = STUDER PH = PHILIPS HP = HEWLETT PACKARD

ABBREVIATIONS:
CER = CERAMIC / FILM = FILM TYPE / XF = CLAMP FOR FUSES
XDL = DL SOCKET

ORIG 89/09/14 (01) 89/10/13 (02) 90/09/06

AL REMBUS + UP 1.328.612.21

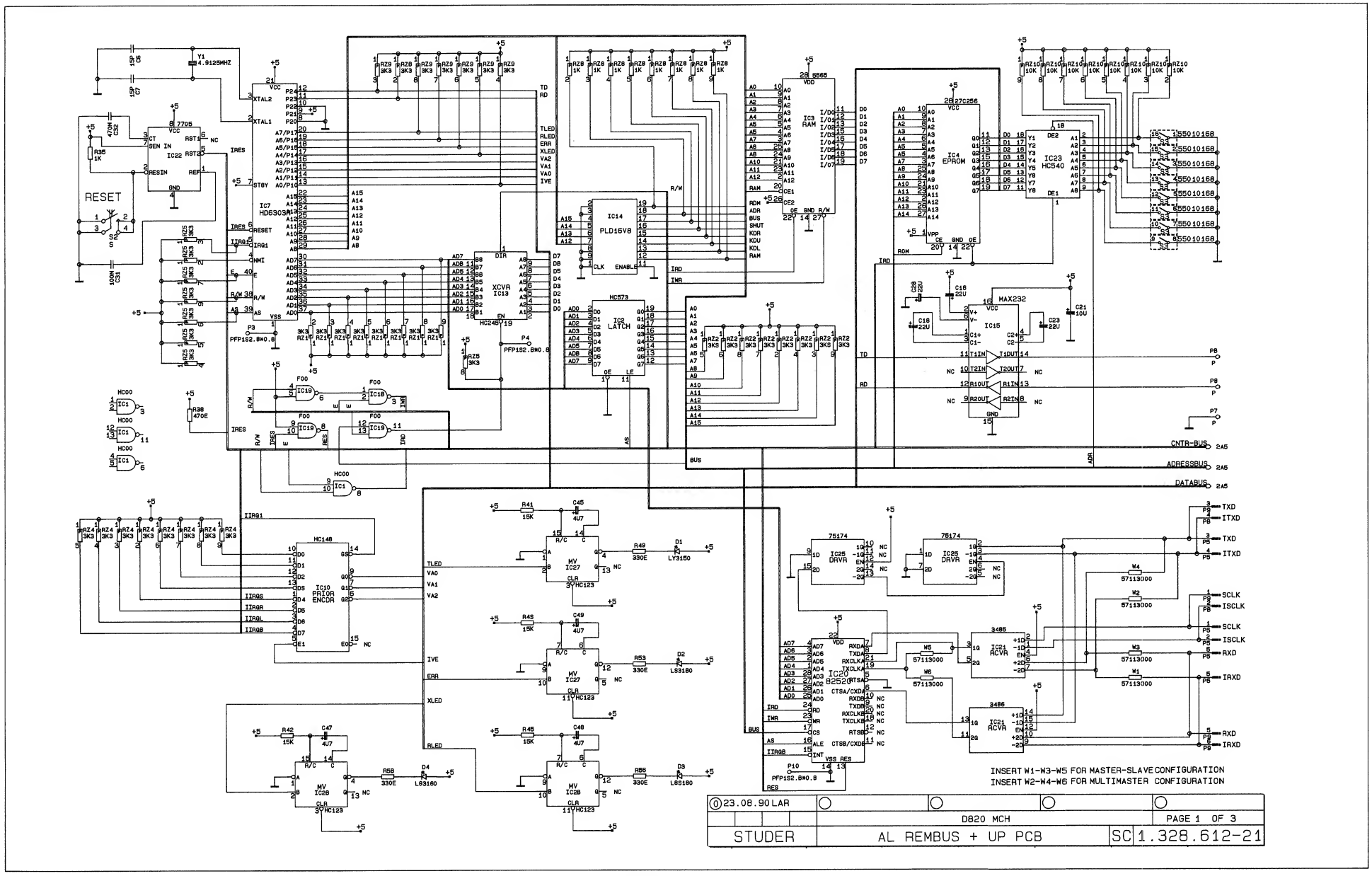

AL REMBUS + UP 1.328.612.21

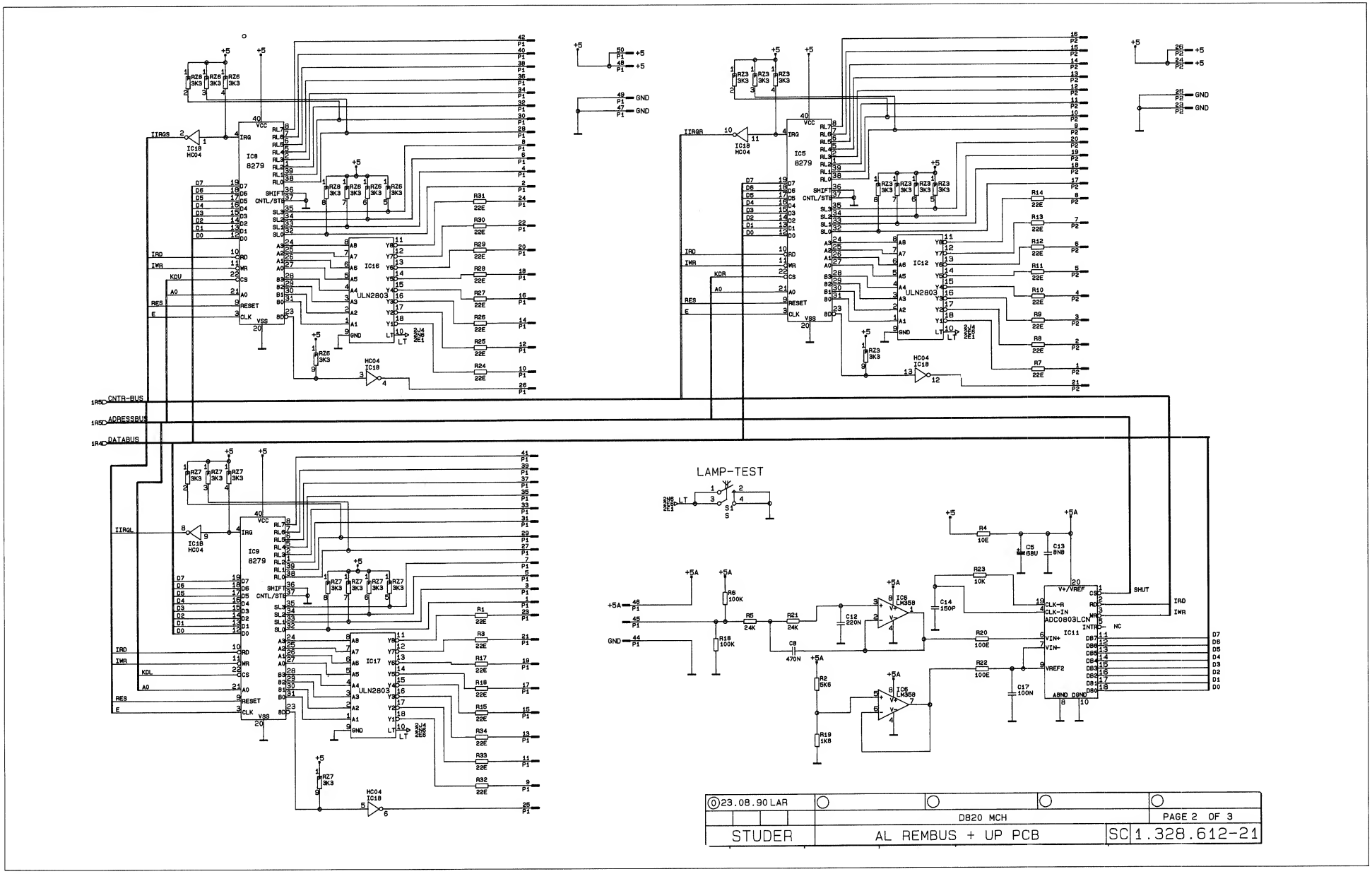

AL REMBUS + UP 1.328.612.21

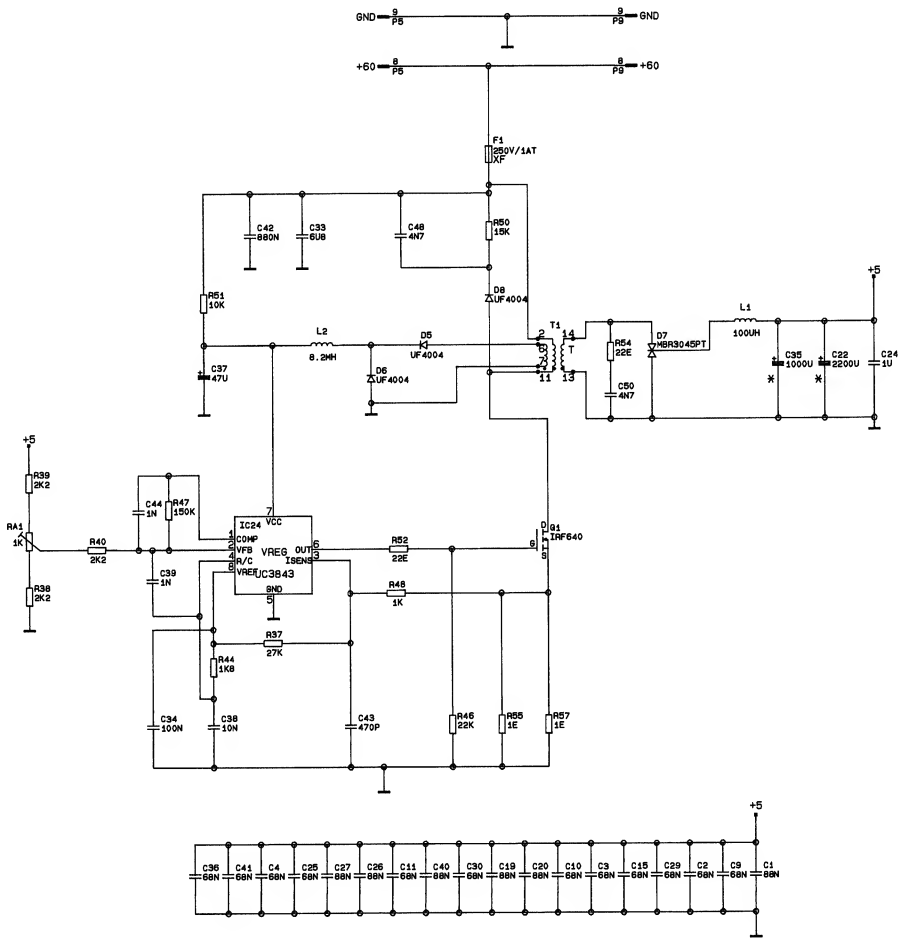

*C22 ODER C35 BESTUCKEN

0 23.08.90 LAR			
	D820 MCH		PAGE 3 OF 3
STUDER	AL REMBUS + UP PCB	SC	1.328.612-21

AL REMBUS + UP 1.328.612.21

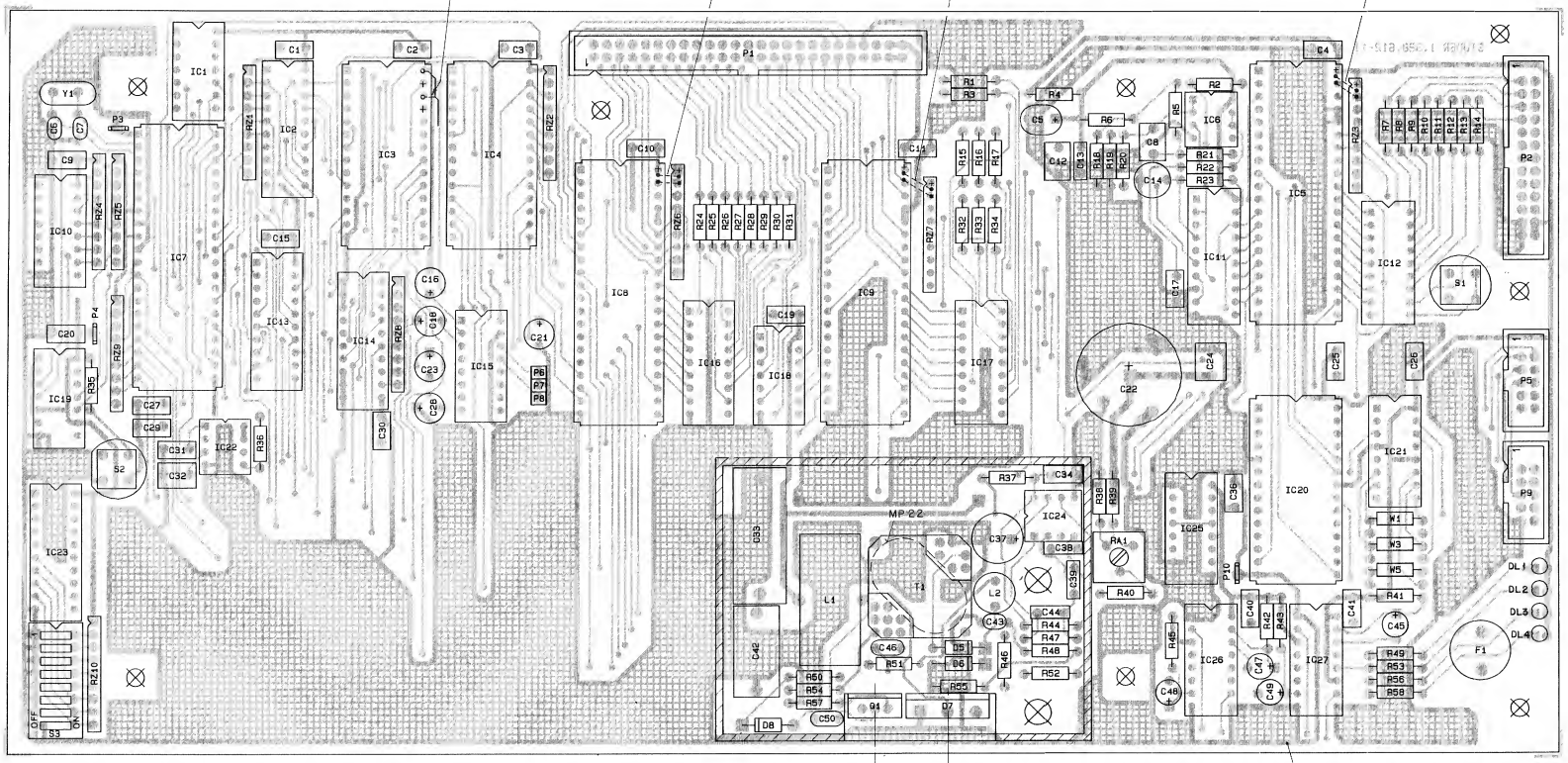

IND.	POS.NO.	PART NO.	VALUE	SPECIFICATIONS / EQUIVALENT	MANUF.
	C....1	59.06.0683	68 n	10%, 63V , PETP	ANY
	C....2	59.06.0683	68 n	10%, 63V , PETP	ANY
	C....3	59.06.0683	68 n	10%, 63V , PETP	ANY
	C....4	59.06.0683	68	10%, 63V , PETP	ANY
	C....5	59.26.0680	68 u	20%, 6.3V , SAL	ANY
	C....6	59.34.1150	15 p	5%, NP 0 , CER	ANY
	C....7	59.34.1150	15 p	5%, NP 0 , CER	ANY
	C....8	59.06.0474	.47 u	10%, 63V , PETP	ANY
	C....9	59.06.0683	68 n	10%, 63V , PETP	ANY
	C....10	59.06.0683	68 n	10%, 63V , PETP	ANY
	C....11	59.06.0683	68 n	10%, 63V , PETP	ANY
	C....12	59.06.0224	.22 u	10%, 63V , PETP	ANY
	C....13	59.06.0683	68 n	10%, 63V , PETP	ANY
	C....14	59.05.2151	150 p	2.5%, 630V , PP	ANY
	C....15	59.06.0683	68 n	10%, 63V , PETP	ANY
	C....16	59.22.5220	22 u	-20%, 25V , EL	ANY
	C....17	59.06.0104	.1 u	10%, 63V , PETP	ANY
	C....18	59.22.5220	22 u	-20%, 25V , EL	ANY
	C....19	59.06.0683	68 n	10%, 63V , PETP	ANY
	C....20	59.06.0683	68 n	10%, 63 , PETP	ANY
	C....21	59.22.6100	10 u	-20%, 35V , EL	ANY
	C....22	59.28.2222	2200 u	20%, 16V , EL	ANY
	C....23	59.22.5220	22 u	-20%, 25V , EL	ANY
	C....24	59.06.0105	1.0 u	10%, 50V , PETP	ANY
	C....25	59.06.0683	68 n	10%, 63V , PETP	ANY
	C....26	59.06.0683	68 n	10%, 63V , PETP	ANY
	C....27	59.06.0683	68 n	10%, 63V , PETP	ANY
	C....28	59.22.5220	22 u	-20%, 25V , EL	ANY
	C....29	59.06.0683	68 n	10%, 63V , PETP	ANY
	C....30	59.06.0683	68 n	10%, 63V , PETP	ANY
	C....31	59.06.0104	.1 u	10%, 63V , PETP	ANY
	C....32	59.06.0474	.47 u	10%, 63V , PETP	ANY
	C....33	59.02.0605	6.8 u	5%, 63V , MFC	ANY
	C....34	59.06.0104	.1 u	10%, 63V , PETP	ANY
	C....36	59.06.0683	68 n	10%, 63V , PETP	ANY
	C....37	59.30.4470	47 u	20%, 16V , TA	ANY
	C....38	59.06.0103	.01 u	10%, 63V , PETP	ANY

IND.	POS.NO.	PART NO.	VALUE	SPECIFICATIONS / EQUIVALENT	MANUF.
	C....39	59.06.0102	1000 p	10%, 63V , PETP	ANY
	C....40	59.06.0683	68 n	10%, 63V , PETP	ANY
	C....41	59.06.0683	68 n	10%, 63V , PETP	ANY
	C....42	59.02.2684	.68 u	5%, 100V , MFC	ANY
	C....43	59.32.2471	470 p	10%, 50V , CER	ANY
	C....44	59.06.0102	1000 p	10%, 63V , PETP	ANY
	C....45	59.30.3479	4.7 u	20%, 10V , TA	ANY
	C....46	59.32.2472	4700 p	10%, 50V , CER	ANY
	C....47	59.30.3479	4.7 u	20%, 10V , TA	ANY
	C....48	59.30.3479	4.7 u	20%, 10V , TA	ANY
	C....49	59.30.3479	4.7 u	20%, 10V , TA	ANY
	C....50	59.32.2472	4700 p	10%, 50V , CER	ANY
	DL....1	50.04.2130		LY 3360 GB DIFF	ANY
	DL....2	50.04.2129		LS 3360 ST DIFF	ANY
	DL....3	50.04.2131		LG 3360 GN DIFF	ANY
	DL....4	50.04.2131		LG 3360 GN DIFF	ANY
	D.....5	50.04.0138		BYT 01-400, UF 4004	ANY
	D.....6	50.04.0138		BYT 01-400, UF 4004	ANY
	D.....7	50.04.0520		KBR 3045 PT, BYV 73-45	ANY
	D.....8	50.04.0138		BYT 01-400, UF 4004	ANY
	F.....1	51.01.0117		T1.0A/250V, 5 x 20	ANY
	IC....1	50.17.1000		74 HC 00	ANY
	IC....2	50.17.1373		74 HC 573	ANY
	IC....3	50.14.0133		HM 6264LP-15	ANY
	IC....4	50.14.2004		HN 27 C256 G-25 (SW 1.328.898.21)	ANY
	IC....5	50.16.0111		IP 8279-5 MSL 8279 P-5	ANY
	IC....6	50.08.0286		LM 358 N LM 358 P	ANY
	IC....7	50.16.0119		HD 63 B 03 RP	ANY
	IC....8	50.16.0111		IP 8279-5 MSL 8279 P-5	ANY
	IC....9	50.16.0111		IP 8279-5 MSL 8279 P-5	ANY
	IC....10	50.17.1148		74 HC 148	ANY
	IC....11	50.07.0029		ADC 0803 LCN	ANY
	IC....12	50.15.0119		ULN - 2803	ANY

AL REMBUS + UP 1.328.612.21

IND.	POS.NO.	PART NO.	VALUE	SPECIFICATIONS / EQUIVALENT	MANUF.
	IC...13	50.17.1645		74 HC 245	ANY
	IC...14	50.18.0100		16 V 8 - 25 LP (SW 1.328.897.20)	ANY
	IC...15	50.15.0120		MAX 232 CPE	ANY
	IC...16	50.15.0119		ULN - 2803	ANY
	IC...17	50.15.0112		ULN - 2003	ANY
	IC...18	50.17.1004		74 HC 04	ANY
	IC...19	50.21.0000		74 F 00	ANY
	IC...20	50.16.0153		SAB 82520-P	ANY
	IC...21	50.15.0104		MC 3486 P DS 3486	ANY
	IC...22	50.11.0122		TL 7705 ACP	ANY
	IC...23	50.17.1540		74 HC 540	ANY
	IC...24	50.10.0113		IP 3843 N	ANY
	IC...25	50.15.0121		SN 75174 N	ANY
	IC...26	50.17.1123		74 HC 123	ANY
	IC...27	50.17.1123		74 HC 123	ANY
	L.....1	62.03.0040	100 uH	5%, FILTER	ANY
	L.....2	62.02.1822	8.2 mH	5%, FILTER	ANY
	MP....1	1.328.612.11		AL CPU-PCB	ST
	MP....2	1.328.612.01		NR.-ETIKETTE 5*20	ST
	MP....3	1.862.812.02		ABSCHIRMHAUBE	ST
	MP....4	21.53.0356		Z - SCHR. IS, ZN , M 3 * 10	ANY
	MP....5	21.53.0356		Z - SCHR. IS, ZN , M 3 * 10	ANY
	MP....6	37.01.0101		TELLERFEDER D 3.2/ 8 * 0.3	ANY
	MP....7	37.01.0101		TELLERFEDER D 3.2/ 8 * 0.3	ANY
	MP....8	37.01.0101		TELLERFEDER D 3.2/ 8 * 0.3	ANY
	MP....9	37.01.0101		TELLERFEDER D 3.2/ 8 * 0.3	ANY
	MP...10	50.20.0404		ISOLIERDURCHFUEHRUNG D 6.0/3.5	ANY
	MP...11	50.20.0404		ISOLIERDURCHFUEHRUNG D 6.0/3.5	ANY
	MP...12	50.20.0305		TO 220 GLIMMERSCHEIBE GEFETTET	ANY
	MP...13	50.20.0317		TO 218 GLIMMERSCHEIBE GEFETTET	ANY
	MP...14	21.53.9354		Z-SCHRAUBE IS, M 3 * 6 m. Sich'scheibe	ANY
	MP...15	21.53.9354		Z-SCHRAUBE IS , M 3 * 6 m. Sich'scheibe	ANY
	MP...18	1.010.022.22		NIETMUTTER M3*25	ANY
	MP...19	1.010.022.22		NIETMUTTER M3*25	ANY
	MP...20	1.010.098.27		DIST.-BOLZEN 2.3mm	ANY

IND.	POS.NO.	PART NO.	VALUE	SPECIFICATIONS / EQUIVALENT	MANUF.
	MP...21	1.010.098.27		DIST.-BOLZEN 2.3mm	ANY
	MP...22	1.010.002.61		UNTERLAGE ZU TRAFO	ANY
	MP...23	1.010.115.51		ETIKETTE SICHERUNG	ST
	MP...24	1.101.001.21		ETIKETTE HARDWARE 21	ST
	MP...25	43.01.0108		ESE-WARNSCHILD	ANY
	MP...26	89.01.1499		QUARZ-UNTERLAGE	ANY
	P.....1	54.14.2005		STECKER 50 P , SN, GERADE	ANY
	P.....2	54.14.2003		STECKER 26 P , SN, GERADE	ANY
	P.....3	54.02.0320		FLACH 2.8*0.8, GERADE	ANY
	P.....4	54.02.0320		FLACH 2.8*0.8, GERADE	ANY
	P.....5	54.14.2001		STECKER 10 P , SN, GERADE	ANY
	P.....6	54.01.0020		STIFT .63*.63 H=11.3	ANY
	P.....7	54.01.0020		STIFT .63*.63 H=11.3	ANY
	P.....8	54.01.0020		STIFT .63*.63 H=11.3	ANY
	P.....9	54.14.2001		STECKER 10 P , SN, GERADE	ANY
	P....10	54.02.0320		FLACH 2.8*0.8, GERADE	ANY
	Q.....1	50.03.1510		IRF 640	ANY
	R.....1	57.11.3220	22 E	1%, 0207 , MF	ANY
	R.....2	57.11.3562	5.6 k	1%, 0207 , MF	ANY
	R.....3	57.11.3220	22 E	1%, 0207 , MF	ANY
	R.....4	57.11.3100	10 E	1%, 0207 , MF	ANY
	R.....5	57.11.3243	24 k	1%, 0207 , MF	ANY
	R.....6	57.11.3104	100 k	1%, 0207 , MF	ANY
	R.....7	57.11.3220	22 E	1%, 0207 , MF	ANY
	R.....8	57.11.3220	22 E	1%, 0207 , MF	ANY
	R.....9	57.11.3220	22 E	1%, 0207 , MF	ANY
	R....10	57.11.3220	22 E	1%, 0207 , MF	ANY
	R....11	57.11.3220	22 E	1%, 0207 , MF	ANY
	R....12	57.11.3220	22 E	1%, 0207 , MF	ANY
	R....13	57.11.3220	22 E	1%, 0207 , MF	ANY
	R....14	57.11.3220	22 E	1%, 0207 , MF	ANY
	R....15	57.11.3220	22 E	1%, 0207 , MF	ANY
	R....16	57.11.3220	22 E	1%, 0207 , MF	ANY
	R....17	57.11.3220	22 E	1%, 0207 , MF	ANY

IND.	POS.NO.	PART NO.	VALUE	SPECIFICATIONS / EQUIVALENT	MANUF.
	R....18	57.11.3104	100 k	1%, 0207 , MF	ANY
	R....19	57.11.3182	1.8 k	1%, 0207 , MF	ANY
	R....20	57.11.3101	100 E	1%, 0207 , MF	ANY
	R....21	57.11.3243	24 k	1%, 0207 , MF	ANY
	R....22	57.11.3101	100 E	1%, 0207 , MF	ANY
	R....23	57.11.3103	10 k	1%, 0207 , MF	ANY
	R....24	57.11.3220	22 E	1%, 0207 , MF	ANY
	R....25	57.11.3220	22 E	1%, 0207 , MF	ANY
	R....26	57.11.3220	22 E	1%, 0207 , MF	ANY
	R....27	57.11.3220	22 E	1%, 0207 , MF	ANY
	R....28	57.11.3220	22 E	1%, 0207 , MF	ANY
	R....29	57.11.3220	22 E	1%, 0207 , MF	ANY
	R....30	57.11.3220	22 E	1%, 0207 , MF	ANY
	R....31	57.11.3220	22 E	1%, 0207 , MF	ANY
	R....32	57.11.3220	22 E	1%, 0207 , MF	ANY
	R....33	57.11.3220	22 E	1%, 0207 , MF	ANY
	R....34	57.11.3220	22 E	1%, 0207 , MF	ANY
	R....35	57.11.3102	1 k	1%, 0207 , MF	ANY
	R....36	57.11.3471	470 E	1% 0207 , MF	ANY
	R....37	57.11.3273	27 k	1%, 0207 , MF	ANY
	R....38	57.11.3222	2.2 k	1%, 0207 , MF	ANY
	R....39	57.11.3222	2.2 k	1%, 0207 , MF	ANY
	R....40	57.11.3222	2.2 k	1%, 0207 , MF	ANY
	R....41	57.11.3153	15 k	1%, 0207 , MF	ANY
	R....42	57.11.3153	15 k	1%, 0207 , MF	ANY
	R....43	57.11.3153	15 k	1%, 0207 , MF	ANY
	R....44	57.11.3182	1.8 k	1%, 0207 , MF	ANY
	R....45	57.11.3153	15 k	1%, 0207 , MF	ANY
	R....46	57.11.3223	22 k	1%, 0207 , MF	ANY
	R....47	57.11.3154	150 k	1%, 0207 , MF	ANY
	R....48	57.11.3102	1 k	1%, 0207 , MF	ANY
	R....49	57.11.3331	330 E	1%, 0207 , MF	ANY
	R....50	57.11.3153	15 k	1%, 0207 , MF	ANY
	R....51	57.11.3103	10 k	1%, 0207 , MF	ANY
	R....52	57.11.3220	22 E	1%, 0207 , MF	ANY
	R....53	57.11.3331	330 E	1%, 0207 , MF	ANY
	R....54	57.11.3220	22 E	1%, 0207 , MF	ANY

IND.	POS.NO.	PART NO.	VALUE	SPECIFICATIONS / EQUIVALENT	MANUF.
	R....55	57.11.3109	1.0 E	1%, 0207 , MF	ANY
	R....56	57.11.3331	330 E	1%, 0207 , MF	ANY
	R....57	57.11.3109	1.0 E	1%, 0207 , MF	ANY
	R....58	57.11.3331	330 E	1%, 0207 , MF	ANY
	RA....1	58.01.8102	1 k	10% .5 W , PMG	ANY
	RZ....1	57.88.4332		8 * 3.3 K, 2%, SIP 9	ANY
	RZ....2	57.88.4332		8 * 3.3 K, 2%, SIP 9	ANY
	RZ....3	57.88.4332		8 * 3.3 K, 2%, SIP 9	ANY
	RZ....4	57.88.4332		8 * 3.3 K, 2%, SIP 9	ANY
	RZ....5	57.88.4332		8 * 3.3 K, 2%, SIP 9	ANY
	RZ....6	57.88.4332		8 * 3.3 K, 2%, SIP 9	ANY
	RZ....7	57.88.4332		8 * 3.3 K, 2%, SIP 9	ANY
	RZ....8	57.88.4102		8 * 1 K, 2%, SIP 9	ANY
	RZ....9	57.88.4332		8 * 3.3 K, 2%, SIP 9	ANY
	RZ...10	57.88.4102		8 * 1 K, 2%, SIP 9	ANY
	S.....1	55.15.0130		1 TASTE 1*A, IMPULS GR	ANY
	S.....2	55.15.0130		1 TASTE 1*A, IMPULS GR	ANY
	S.....3	55.01.0168		8*A, DIL SWITCH	ANY
	T.....1	1.022.628.00		SWITCHING TRANSFORMER	ST
	W.....1	57.11.3000	0 E	0207 , MF	ANY
	W.....3	57.11.3000	0 E	0207 , MF	ANY
	W.....5	57.11.3000	0 E	0207 , MF	ANY
	W.....7	64.01.0104		DRAHT FUER KORREKTUR	ANY
	XF....1	53.03.0116		5 * 20 PRINT-STEHEND	ANY
	XIC...3	53.03.0173		DIL 28-POL	ANY
	XIC...4	53.03.0173		DIL 28-POL	ANY
	XIC...5	53.03.0172		DIL 40-POL	ANY
	XIC...7	53.03.0172		DIL 40-POL	ANY
	XIC...8	53.03.0172		DIL 40-POL	ANY
	XIC...9	53.03.0172		DIL 40-POL	ANY

IND.	POS.NO.	PART NO.	VALUE	SPECIFICATIONS / EQUIVALENT	MANUF.
	XIC..14	53.03.0165		DIL 20-POL	ANY
	XIC..20	53.03.0173		DIL 28-POL	ANY
	XIC..21	53.03.0168		DIL 16-POL	ANY
	XIC..25	53.03.0168		DIL 16-POL	ANY
	Y.....1	89.01.0560		4.9152 MHZ	ANY

REMARKS:

MANUFACTURERS:
St = STUDER / Ph = PHILIPS / So = SONY

ABBREVIATIONS:
CER = CERAMIC / FILM = FILM TYPE / XF = CLAMP FOR FUSES /
XIC = IC SOCKET

ORIG 90/08/20

AL SHUTTLE 1.328.613.00

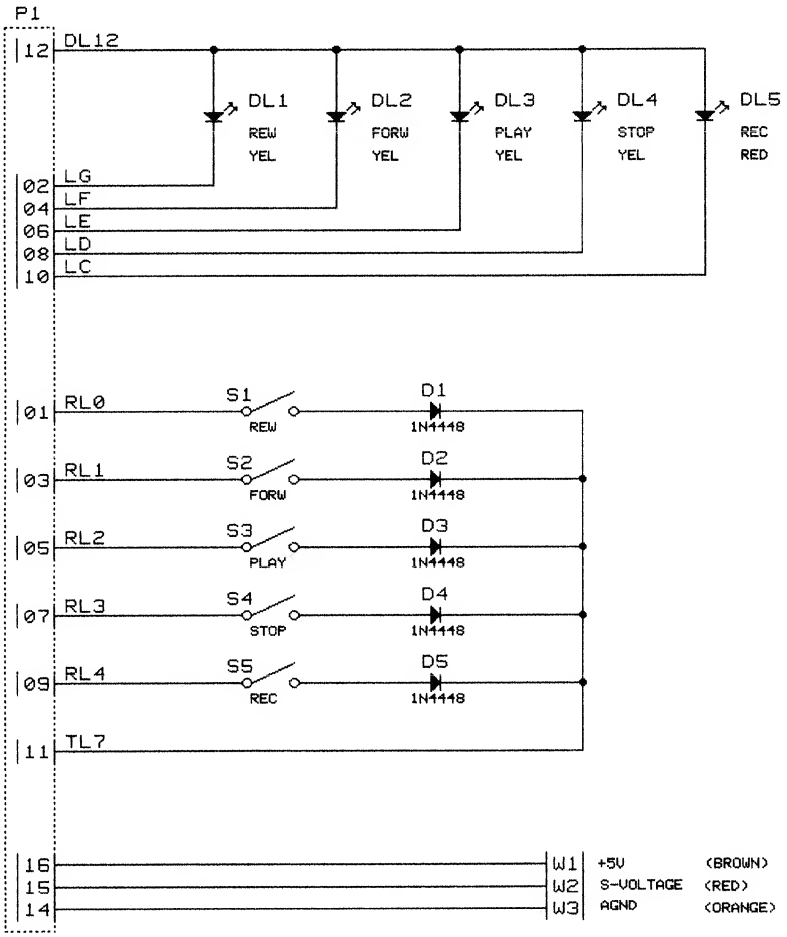

27.09.89 BAD			
	D820MCH AUTOLOCATOR		PAGE 1 OF 1
STUDER	AL SHUTTLE	SC	1.328.613.00

AL SHUTTLE 1.328.613.00

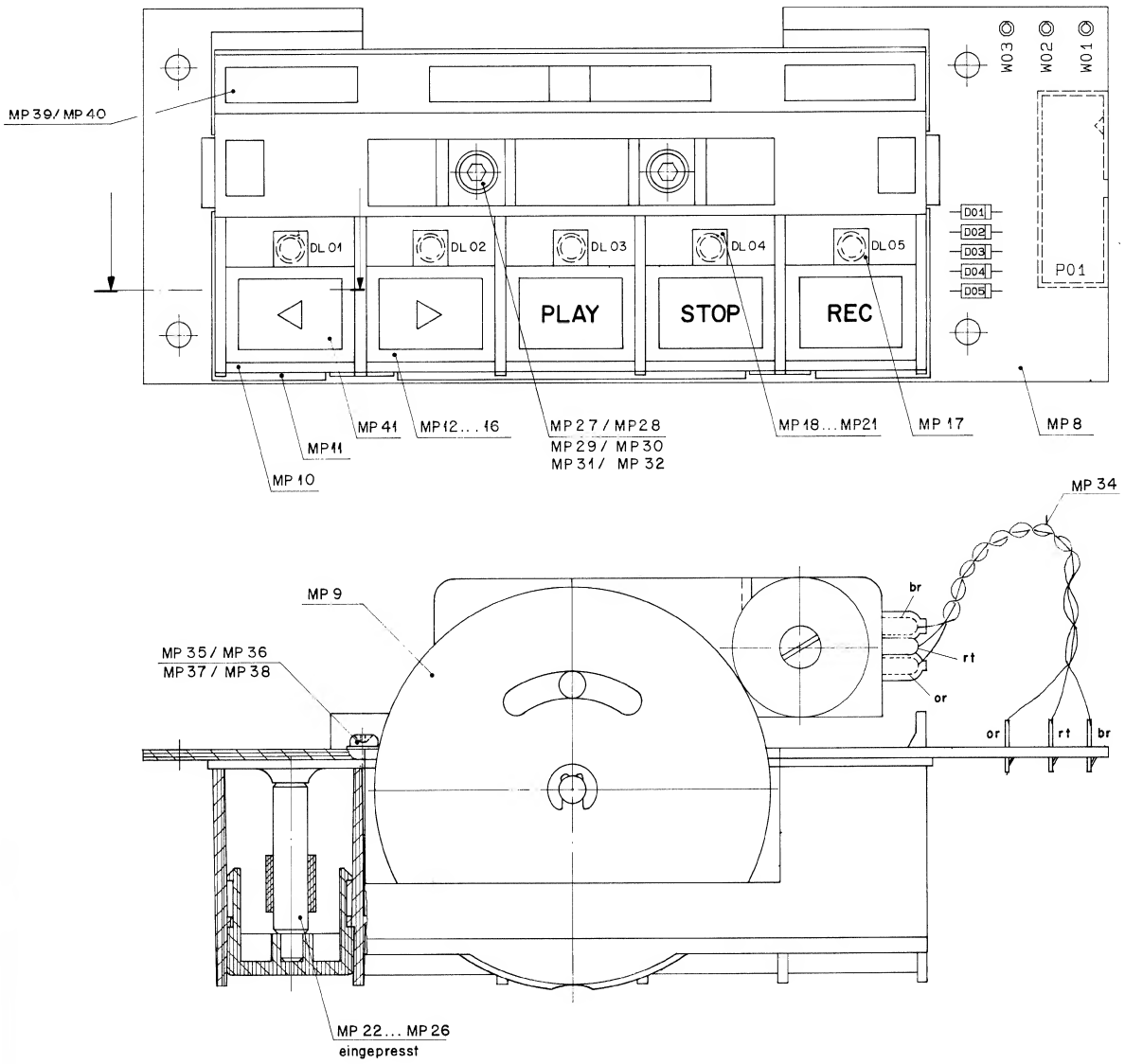

IND.	POS.NO.	PART NO.	VALUE	SPECIFICATIONS / EQUIVALENT	MANUF.
	D....01	50.04.0125		1N 4448 SI	ANY
	D....02	50.04.0125		1N 4448 SI	ANY
	D....03	50.04.0125		1N 4448 SI	ANY
	D....04	50.04.0125		1N 4448 SI	ANY
	D....05	50.04.0125		1N 4448 SI	ANY
	DL...01	50.04.2152		HLMP 1440 GB KLAR	ANY
	DL...02	50.04.2152		HLMP 1440 GB KLAR	ANY
	DL...03	50.04.2152		HLMP 1440 GB KLAR	ANY
	DL...04	50.04.2152		HLMP 1440 GB KLAR	ANY
	DL...05	50.04.2200		HLMP 1700 RT DIFF	ANY
	MP...08	1.328.613.11		AL SHUTTLE PCB	ST
	MP...09	1.727.180.00		SHUTTLE-POT. KPL.	ST
	MP...10	1.727.360.02		TASTENGEHAEUSE	ST
	MP...11	1.727.360.03		SCHALTMATTE	ANY
	MP...12	1.727.360.04		DRUCKTASTE 19/14	ST
	MP...13	1.727.360.04		DRUCKTASTE 19/14	ST
	MP...14	1.727.360.04		DRUCKTASTE 19/14	ST
	MP...15	1.727.360.04		DRUCKTASTE 19/14	ST
	MP...16	1.727.360.04		DRUCKTASTE 19/14	ST
	MP...17	1.011.235.32		KALOTTE ROT	ST
	MP...18	1.011.235.33		KALOTTE GELB	ANY
	MP...19	1.011.235.33		KALOTTE GELB	ANY
	MP...20	1.011.235.33		KALOTTE GELB	ANY
	MP...21	1.011.235.33		KALOTTE GELB	ANY
	MP...22	1.011.235.29		BOLZEN	ANY
	MP...23	1.011.235.29		BOLZEN	ANY
	MP...24	1.011.235.29		BOLZEN	ANY
	MP...25	1.011.235.29		BOLZEN	ANY
	MP...26	1.011.235.29		BOLZEN	ANY
	MP...27	21.53.0354		Z - SCHR. IS , ZN , M 3 * 6	ANY
	MP...28	21.53.0354		Z - SCHR. IS , ZN , M 3 * 6	ANY
	MP...29	24.16.1030		RIPPENSCHEIBE D 3.2/5.5	ANY
	MP...30	24.16.1030		RIPPENSCHEIBE D 3.2/5.5	ANY
	MP...31	23.01.2032		U-SCHEIBE D 3.2/ 7 *0.5	ANY
	MP...32	23.01.2032		U-SCHEIBE D 3.2/ 7 *0.5	ANY

IND.	POS.NO.	PART NO.	VALUE	SPECIFICATIONS / EQUIVALENT	MANUF.
	MP...33	1.328.613.01		NR.-ETIKETTE 5*20	ST
	MP...37	23.01.1025		U-SCHEIBE M2.3	ANY
	MP...38	23.01.1025		U-SCHEIBE M2.3	ANY
	MP...39	1.011.235.35		BLINDEINSATZ	ST
	MP...40	1.011.235.35		BLINDEINSATZ	ST
	MP...41	1.727.360.06		SCHILDERSATZ	ST
	P....01	54.14.2102		P STECKER 16 P , SN, GERADE	ANY
	W.....1	1.328.613.93		LITZE BRAUN	ANY
	W.....2	1.328.613.93		LITZE ROT	ANY
	W.....3	1.328.613.93		LITZE ORANGE	ANY
	XDL...1	53.03.0218		LED-SOCKEL *** QTY 2 ***	ANY
	XDL...2	53.03.0218		LED-SOCKEL *** QTY 2 ***	ANY
	XDL...3	53.03.0218		LED-SOCKEL *** QTY 2 ***	ANY
	XDL...4	53.03.0218		LED-SOCKEL *** QTY 2 ***	ANY
	XDL...5	53.03.0218		LED-SOCKEL *** QTY 2 ***	ANY

REMARKS:

MANUFACTURERS:
St = STUDER / Ph = PHILIPS / So = SONY

ABBREVIATIONS:
CER = CERAMIC / FILM = FILM TYPE / XF = CLAMP FOR FUSES /
XIC = IC SOCKET

ORIG 89/09/28

SMEM KEYS & DISPLAY 1.328.616.00

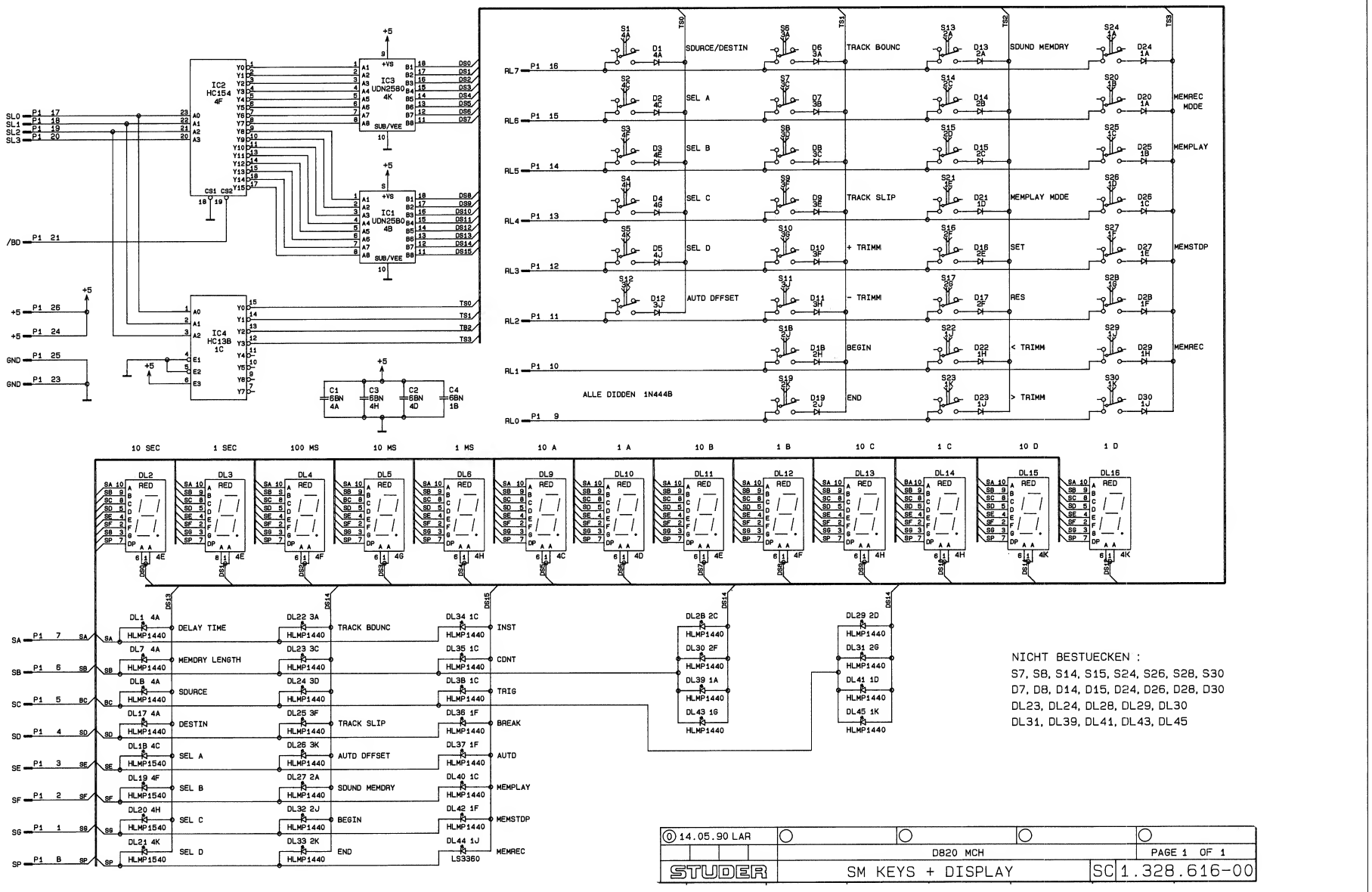

SMEM KEYS & DISPLAY 1.328.616.00

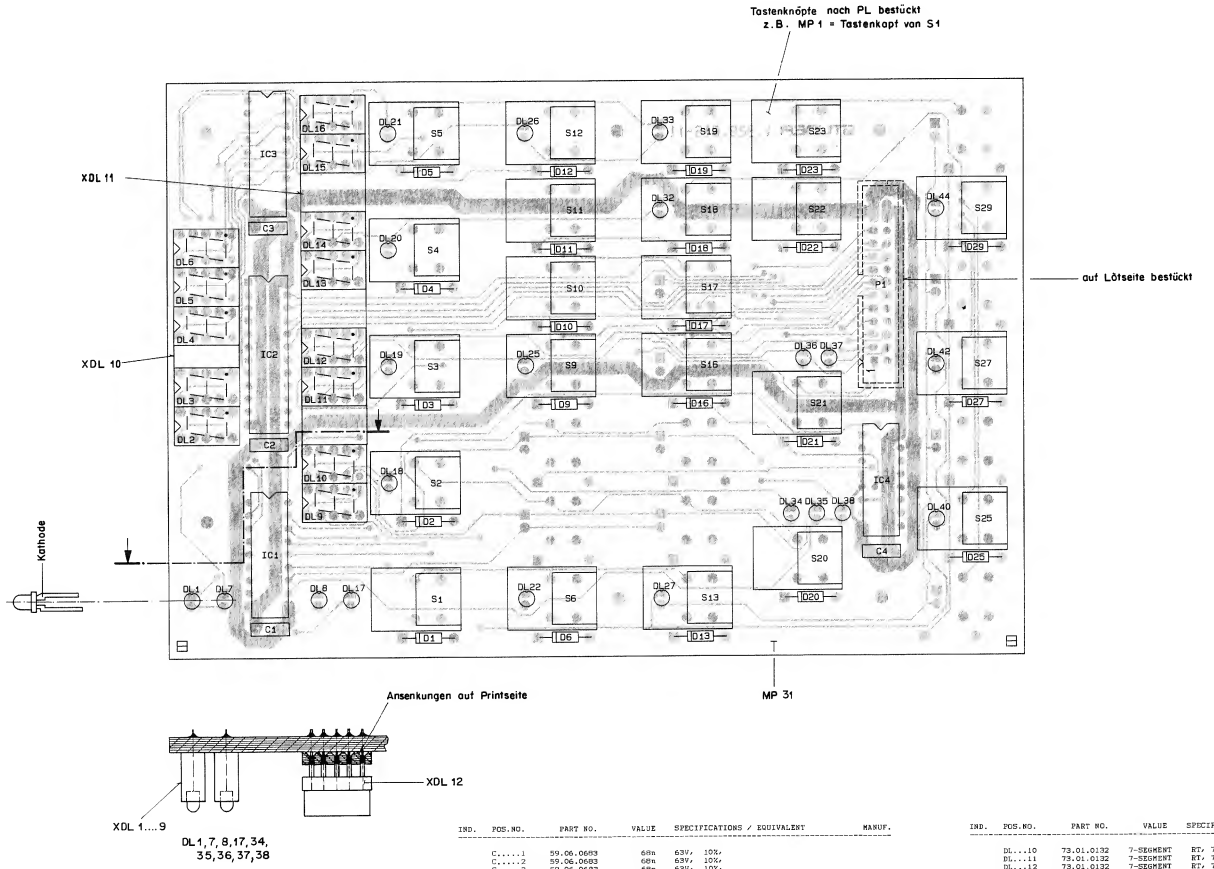

IND.	POS.NO.	PART NO.	VALUE	SPECIFICATIONS / EQUIVALENT	MANUF.
	C....1	59.06.0683	68n	63V, 10%,	
	C....2	59.06.0683	68n	63V, 10%,	
	C....3	59.06.0683	68n	63V, 10%,	
	C....4	59.06.0683	68n	63V, 10%,	
	D....1	50.04.0125	1N4448		
	D....2	50.04.0125	1N4448		
	D....3	50.04.0125	1N4448		
	D....4	50.04.0125	1N4448		
	D....5	50.04.0125	1N4448		
	D....6	50.04.0125	1N4448		
	D....9	50.04.0125	1N4448		
	D....10	50.04.0125	1N4448		
	D....11	50.04.0125	1N4448		
	D....12	50.04.0125	1N4448		
	D....13	50.04.0125	1N4448		
	D....16	50.04.0125	1N4448		
	D....17	50.04.0125	1N4448		
	D....18	50.04.0125	1N4448		
	D....19	50.04.0125	1N4448		
	D....20	50.04.0125	1N4448		
	D....21	50.04.0125	1N4448		
	D....22	50.04.0125	1N4448		
	D....23	50.04.0125	1N4448		
	D....25	50.04.0125	1N4448		
	D....27	50.04.0125	1N4448		
	D....29	50.04.0125	1N4448		
	DL....1	50.04.2152	HLMP1440	LED 3MM YELLOW	
	DL....2	73.01.0132	7-SEGMENT	RT, 7.6MM, C.A	
	DL....3	73.01.0132	7-SEGMENT	RT, 7.6MM, C.A	
	DL....4	73.01.0132	7-SEGMENT	RT, 7.6MM, C.A	
	DL....5	73.01.0132	7-SEGMENT	RT, 7.6MM, C.A	
	DL....6	73.01.0132	7-SEGMENT	RT, 7.6MM, C.A	
	DL....7	50.04.2152	HLMP1440	LED 3MM YELLOW	
	DL....8	50.04.2152	HLMP1440	LED 3MM YELLOW	
	DL....9	73.01.0132	7-SEGMENT	RT, 7.6MM, C.A	

IND.	POS.NO.	PART NO.	VALUE	SPECIFICATIONS / EQUIVALENT	MANUF.
	DL....10	73.01.0132	7-SEGMENT	RT, 7.6MM, C.A	
	DL....11	73.01.0132	7-SEGMENT	RT, 7.6MM, C.A	
	DL....12	73.01.0132	7-SEGMENT	RT, 7.6MM, C.A	
	DL....13	73.01.0132	7-SEGMENT	RT, 7.6MM, C.A	
	DL....14	73.01.0132	7-SEGMENT	RT, 7.6MM, C.A	
	DL....15	73.01.0132	7-SEGMENT	RT, 7.6MM, C.A	
	DL....16	73.01.0132	7-SEGMENT	RT, 7.6MM, C.A	
	DL....17	50.04.2152	HLMP1440	LED 3MM YELLOW	
	DL....18	50.04.2162	HLMP1540	LED 3MM GREEN	
	DL....19	50.04.2162	HLMP1540	LED 3MM GREEN	
	DL....20	50.04.2162	HLMP1540	LED 3MM GREEN	
	DL....21	50.04.2162	HLMP1540	LED 3MM GREEN	
	DL....22	50.04.2152	HLMP1440	LED 3MM YELLOW	
	DL....25	50.04.2152	HLMP1440	LED 3MM YELLOW	
	DL....26	50.04.2152	HLMP1440	LED 3MM YELLOW	
	DL....27	50.04.2152	HLMP1440	LED 3MM YELLOW	
	DL....32	50.04.2152	HLMP1440	LED 3MM YELLOW	
	DL....33	50.04.2152	HLMP1440	LED 3MM YELLOW	
	DL....34	50.04.2152	HLMP1440	LED 3MM YELLOW	
	DL....35	50.04.2152	HLMP1440	LED 3MM YELLOW	
	DL....36	50.04.2152	HLMP1440	LED 3MM YELLOW	
	DL....37	50.04.2152	HLMP1440	LED 3MM YELLOW	
	DL....38	50.04.2152	HLMP1440	LED 3MM YELLOW	
	DL....40	50.04.2152	HLMP1440	LED 3MM YELLOW	
	DL....42	50.04.2152	HLMP1440	LED 3MM YELLOW	
	DL....44	50.04.2129	LS3360	LED 3MM RED	
	IC....1	50.11.0202	UDN2580A	BCD TO 4 DECIMAL DECODER	
	IC....2	50.17.1154	74HC154	8BIT S/PO SHIFTREGISTER	
	IC....3	50.11.0202	UDN2580A	BCD TO 4 DECIMAL DECODER	
	IC....4	50.17.1138	74HC138	3 TO 8 LINE DECODER	
	P.....1	54.14.4026	26P	RIBBON-CABLE CONN. ACT.PIN	
	MP....1	55.15.0518		BUTTON GR	
	MP....2	55.15.0510		BUTTON SW	
	MP....3	55.15.0510		BUTTON SW	

IND.	POS.NO.	PART NO.	VALUE	SPECIFICATIONS / EQUIVALENT	MANUF.
	MP....4	55.15.0510		BUTTON SW	
	MP....5	55.15.0510		BUTTON SW	
	MP....6	55.15.0519		BUTTON WS	
	MP....9	55.15.0519		BUTTON WS	
	MP...10	55.15.0510		BUTTON SW	
	MP...11	55.15.0510		BUTTON SW	
	MP...12	55.15.0510		BUTTON SW	
	MP...13	55.15.0519		BUTTON WS	
	MP...16	55.15.0512		BUTTON RT	
	MP...17	55.15.0512		BUTTON RT	
	MP...18	55.15.0510		BUTTON SW	
	MP...19	55.15.0510		BUTTON SW	
	MP...20	55.15.0510		BUTTON SW	
	MP...21	55.15.0510		BUTTON SW	
	MP...22	55.15.0510		BUTTON SW	
	MP...23	55.15.0510		BUTTON SW	
	MP...25	55.15.0518		BUTTON GR	
	MP...27	55.15.0510		BUTTON SW	
	MP...29	55.15.0512		BUTTON RT	
	MP...31	1.328.616.11		EMPTY PCB	
	MP...32	1.328.616.01		ETIK. PRINTNR.	
	MP...33	43.01.0109		ESE-WARNSCHILD	
	S.....1	55.15.0501		SCHADOW SWITCH, 1 X U	
	S.....2	55.15.0501		SCHADOW SWITCH, 1 X U	
	S.....3	55.15.0501		SCHADOW SWITCH, 1 X U	
	S.....4	55.15.0501		SCHADOW SWITCH, 1 X U	
	S.....5	55.15.0501		SCHADOW SWITCH, 1 X U	
	S.....6	55.15.0501		SCHADOW SWITCH, 1 X U	
	S.....9	55.15.0501		SCHADOW SWITCH, 1 X U	
	S....10	55.15.0501		SCHADOW SWITCH, 1 X U	
	S....11	55.15.0501		SCHADOW SWITCH, 1 X U	
	S....12	55.15.0501		SCHADOW SWITCH, 1 X U	
	S....13	55.15.0501		SCHADOW SWITCH, 1 X U	
	S....16	55.15.0501		SCHADOW SWITCH, 1 X U	
	S....17	55.15.0501		SCHADOW SWITCH, 1 X U	
	S....18	55.15.0501		SCHADOW SWITCH, 1 X U	

IND.	POS.NO.	PART NO.	VALUE	SPECIFICATIONS / EQUIVALENT	MANUF.
	S....19	55.15.0501		SCHADOW SWITCH, 1 X U	
	S....20	55.15.0501		SCHADOW SWITCH, 1 X U	
	S....21	55.15.0501		SCHADOW SWITCH, 1 X U	
	S....22	55.15.0501		SCHADOW SWITCH, 1 X U	
	S....23	55.15.0501		SCHADOW SWITCH, 1 X U	
	S....25	55.15.0501		SCHADOW SWITCH, 1 X U	
	S....27	55.15.0501		SCHADOW SWITCH, 1 X U	
	S....29	55.15.0501		SCHADOW SWITCH, 1 X U	
	XDL...1	1.862.813.03		DIODENABSTANDSHALTER	
	XDL...2	1.862.813.03		DIODENABSTANDSHALTER	
	XDL...3	1.862.813.03		DIODENABSTANDSHALTER	
	XDL...4	1.862.813.03		DIODENABSTANDSHALTER	
	XDL...5	1.862.813.03		DIODENABSTANDSHALTER	
	XDL...6	1.862.813.03		DIODENABSTANDSHALTER	
	XDL...7	1.862.813.03		DIODENABSTANDSHALTER	
	XDL...8	1.862.813.03		DIODENABSTANDSHALTER	
	XDL...9	1.862.813.03		DIODENABSTANDSHALTER	
	XDL...10	1.328.616.02		UNTERLAGE FUER 7-SEGMENT	
	XDL...11	1.328.616.03		UNTERLAGE FUER 7-SEGMENT	
	XDL...12	53.03.0228		SIL SOCK.*** QTY 130 ***	

REMARKS:

MANUFACTURERS:
St = STUDER / Ph = PHILIPS / Se = SONY

ABBREVIATIONS:
CER = CERAMIC / FILM = FILM TYPE / XF = CLAMP FOR FUSES /
XIC = IC SOCKET

ORIG 90/09/03

RDP LEVELS 1.328.621.00

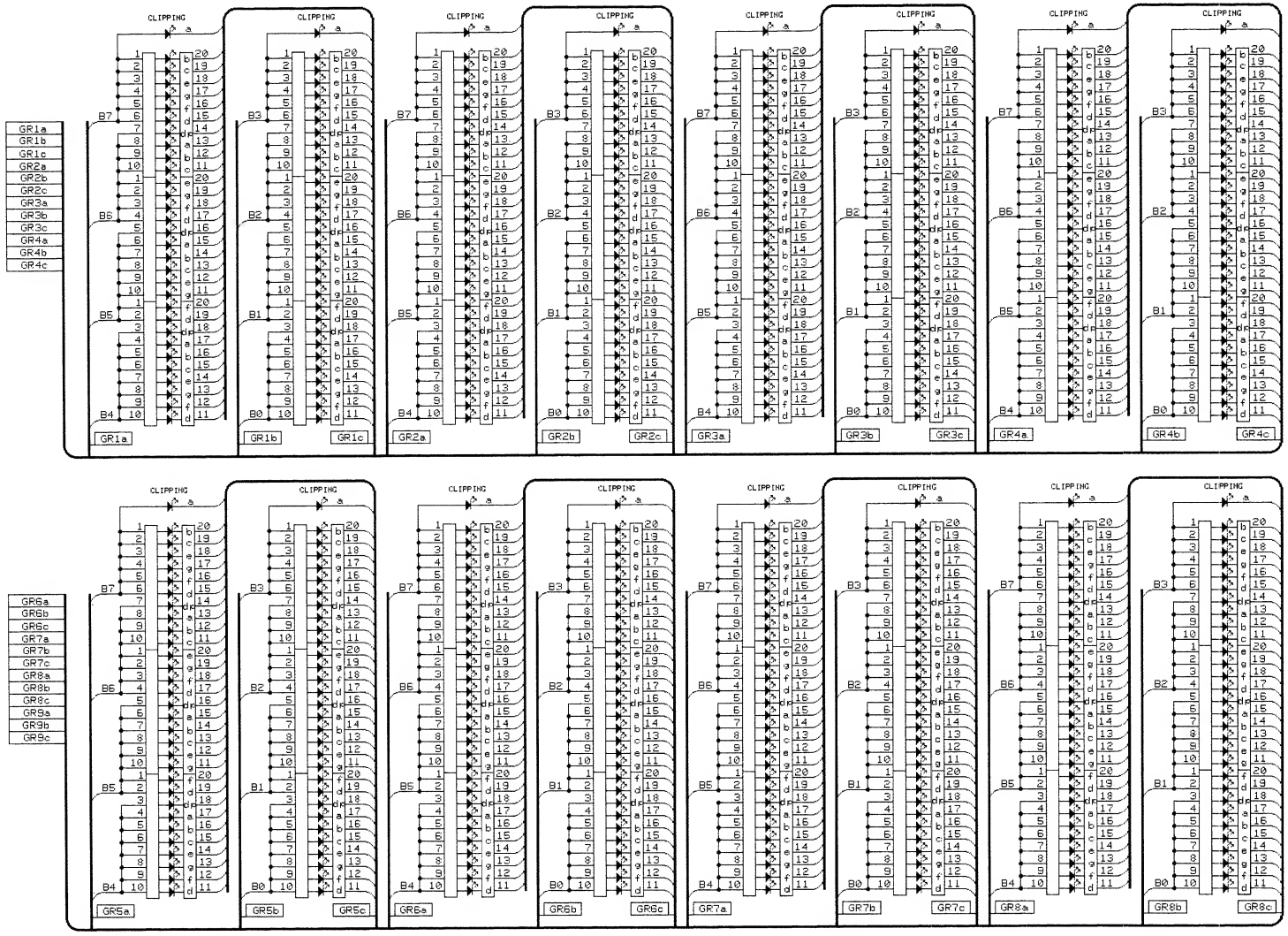

© 13.12.89 BAD			
	D820MCH REMOTE DISPLAY PANEL		PAGE 1 OF 2
STUDER	RDP LEVELS	SC	1.328.621.00

RDP LEVELS 1.328.621.00

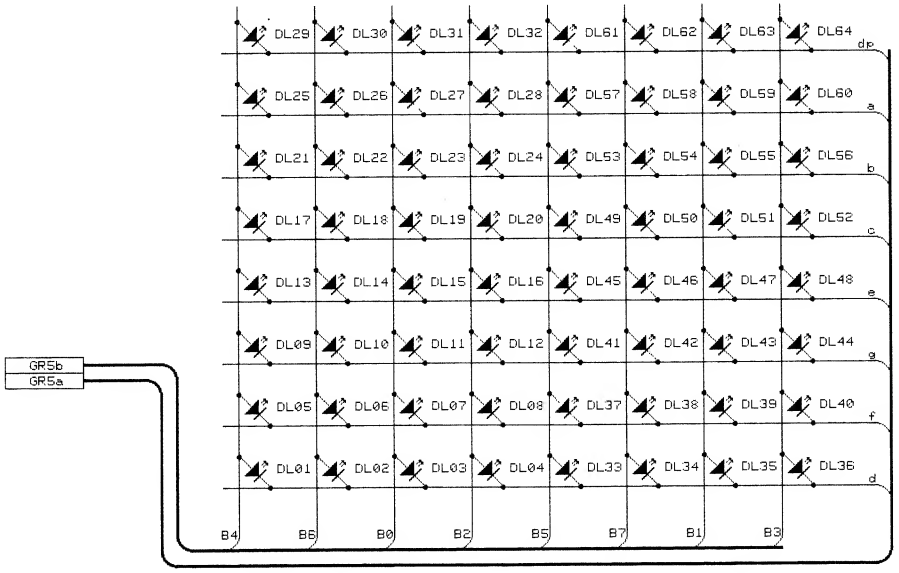

IND.	POS.NO.	PART NO.	VALUE	SPECIFICATIONS / EQUIVALENT	MANUF.
	DL...03	50.04.2162		HLMP 1540 GN CLEAR	ANY
	DL...04	50.04.2129		LS 3360 RT DIFF	ANY
	DL...07	50.04.2162		HLMP 1540 GN CLEAR	ANY
	DL...08	50.04.2129		LS 3360 RT DIFF	ANY
	DL...11	50.04.2162		HLMP 1540 GN CLEAR	ANY
	DL...12	50.04.2129		LS 3360 RT DIFF	ANY
	DL...15	50.04.2162		HLMP 1540 GN CLEAR	ANY
	DL...16	50.04.2129		LS 3360 RT DIFF	ANY
	DL...19	50.04.2162		HLMP 1540 GN CLEAR	ANY
	DL...20	50.04.2129		LS 3360 RT DIFF	ANY
	DL...23	50.04.2162		HLMP 1540 GN CLEAR	ANY
	DL...24	50.04.2129		LS 3360 RT DIFF	ANY
	DL...27	50.04.2162		HLMP 1540 GN CLEAR	ANY
	DL...28	50.04.2129		LS 3360 RT DIFF	ANY
	DL...31	50.04.2162		HLMP 1540 GN CLEAR	ANY
	DL...32	50.04.2129		LS 3360 RT DIFF	ANY
	DL...35	50.04.2162		HLMP 1540 GN CLEAR	ANY
	DL...36	50.04.2129		LS 3360 RT DIFF	ANY
	DL...39	50.04.2162		HLMP 1540 GN CLEAR	ANY
	DL...40	50.04.2129		LS 3360 RT DIFF	ANY
	DL...43	50.04.2162		HLMP 1540 GN CLEAR	ANY
	DL...44	50.04.2129		LS 3360 RT DIFF	ANY
	DL...47	50.04.2162		HLMP 1540 GN CLEAR	ANY
	DL...48	50.04.2129		LS 3360 RT DIFF	ANY
	DL...51	50.04.2162		HLMP 1540 GN CLEAR	ANY
	DL...52	50.04.2129		LS 3360 RT DIFF	ANY
	DL...55	50.04.2162		HLMP 1540 GN CLEAR	ANY
	DL...56	50.04.2129		LS 3360 RT DIFF	ANY
	DL...59	50.04.2162		HLMP 1540 GN CLEAR	ANY
	DL...60	50.04.2129		LS 3360 RT DIFF	ANY
	DL...63	50.04.2162		HLMP 1540 GN CLEAR	ANY
	DL...64	50.04.2129		LS 3360 RT DIFF	ANY
	DL...65	50.04.2129		LS 3360 RT DIFF	ANY
	DL...66	50.04.2129		LS 3360 RT DIFF	ANY
	DL...67	50.04.2129		LS 3360 RT DIFF	ANY
	DL...68	50.04.2129		LS 3360 RT DIFF	ANY
	DL...69	50.04.2129		LS 3360 RT DIFF	ANY

S T U D E R (00) 90/06/05 BAD RDP LEVELS PL 1.328.621.00 PAGE 1

IND.	POS.NO.	PART NO.	VALUE	SPECIFICATIONS / EQUIVALENT	MANUF.
	DL...70	50.04.2129		LS 3360 RT DIFF	ANY
	DL...71	50.04.2129		LS 3360 RT DIFF	ANY
	DL...72	50.04.2129		LS 3360 RT DIFF	ANY
	DL...73	50.04.2129		LS 3360 RT DIFF	ANY
	DL...74	50.04.2129		LS 3360 RT DIFF	ANY
	DL...75	50.04.2129		LS 3360 RT DIFF	ANY
	DL...76	50.04.2129		LS 3360 RT DIFF	ANY
	DL...77	50.04.2129		LS 3360 RT DIFF	ANY
	DL...78	50.04.2129		LS 3360 RT DIFF	ANY
	DL...79	50.04.2129		LS 3360 RT DIFF	ANY
	DL...80	50.04.2129		LS 3360 RT DIFF	ANY
	DLZ..01	50.04.2150		DLZ MV 57164 " G " 10xD RT	ANY
	DLZ..02	50.04.2150		DLZ MV 57164 " G " 10xD RT	ANY
	DLZ..03	50.04.2150		DLZ MV 57164 " G " 10xD RT	ANY
	DLZ..04	50.04.2150		DLZ MV 57164 " G " 10xD RT	ANY
	DLZ..05	50.04.2150		DLZ MV 57164 " G " 10xD RT	ANY
	DLZ..06	50.04.2150		DLZ MV 57164 " G " 10xD RT	ANY
	DLZ..07	50.04.2150		DLZ MV 57164 " G " 10xD RT	ANY
	DLZ..08	50.04.2150		DLZ MV 57164 " G " 10xD RT	ANY
	DLZ..09	50.04.2150		DLZ MV 57164 " G " 10xD RT	ANY
	DLZ..10	50.04.2150		DLZ MV 57164 " G " 10xD RT	ANY
	DLZ..11	50.04.2150		DLZ MV 57164 " G " 10xD RT	ANY
	DLZ..12	50.04.2150		DLZ MV 57164 " G " 10xD RT	ANY
	DLZ..13	50.04.2150		DLZ MV 57164 " G " 10xD RT	ANY
	DLZ..14	50.04.2150		DLZ MV 57164 " G " 10xD RT	ANY
	DLZ..15	50.04.2150		DLZ MV 57164 " G " 10xD RT	ANY
	DLZ..16	50.04.2150		DLZ MV 57164 " G " 10xD RT	ANY
	DLZ..17	50.04.2150		DLZ MV 57164 " G " 10xD RT	ANY
	DLZ..18	50.04.2150		DLZ MV 57164 " G " 10xD RT	ANY
	DLZ..19	50.04.2150		DLZ MV 57164 " G " 10xD RT	ANY
	DLZ..20	50.04.2150		DLZ MV 57164 " G " 10xD RT	ANY
	DLZ..21	50.04.2150		DLZ MV 57164 " G " 10xD RT	ANY
	DLZ..22	50.04.2150		DLZ MV 57164 " G " 10xD RT	ANY
	DLZ..23	50.04.2150		DLZ MV 57164 " G " 10xD RT	ANY
	DLZ..24	50.04.2150		DLZ MV 57164 " G " 10xD RT	ANY
	DLZ..25	50.04.2150		DLZ MV 57164 " G " 10xD RT	ANY

S T U D E R (00) 90/06/05 BAD RDP LEVELS PL 1.328.621.00 PAGE 2

IND.	POS.NO.	PART NO.	VALUE	SPECIFICATIONS / EQUIVALENT	MANUF.
	DLZ..26	50.04.2150		DLZ MV 57164 " G " 10xD RT	ANY
	DLZ..27	50.04.2150		DLZ MV 57164 " G " 10xD RT	ANY
	DLZ..28	50.04.2150		DLZ MV 57164 " G " 10xD RT	ANY
	DLZ..29	50.04.2150		DLZ MV 57164 " G " 10xD RT	ANY
	DLZ..30	50.04.2150		DLZ MV 57164 " G " 10xD RT	ANY
	DLZ..31	50.04.2150		DLZ MV 57164 " G " 10xD RT	ANY
	DLZ..32	50.04.2150		DLZ MV 57164 " G " 10xD RT	ANY
	DLZ..33	50.04.2150		DLZ MV 57164 " G " 10xD RT	ANY
	DLZ..34	50.04.2150		DLZ MV 57164 " G " 10xD RT	ANY
	DLZ..35	50.04.2150		DLZ MV 57164 " G " 10xD RT	ANY
	DLZ..36	50.04.2150		DLZ MV 57164 " G " 10xD RT	ANY
	DLZ..37	50.04.2150		DLZ MV 57164 " G " 10xD RT	ANY
	DLZ..38	50.04.2150		DLZ MV 57164 " G " 10xD RT	ANY
	DLZ..39	50.04.2150		DLZ MV 57164 " G " 10xD RT	ANY
	DLZ..40	50.04.2150		DLZ MV 57164 " G " 10xD RT	ANY
	DLZ..41	50.04.2150		DLZ MV 57164 " G " 10xD RT	ANY
	DLZ..42	50.04.2150		DLZ MV 57164 " G " 10xD RT	ANY
	DLZ..43	50.04.2150		DLZ MV 57164 " G " 10xD RT	ANY
	DLZ..44	50.04.2150		DLZ MV 57164 " G " 10xD RT	ANY
	DLZ..45	50.04.2150		DLZ MV 57164 " G " 10xD RT	ANY
	DLZ..46	50.04.2150		DLZ MV 57164 " G " 10xD RT	ANY
	DLZ..47	50.04.2150		DLZ MV 57164 " G " 10xD RT	ANY
	DLZ..48	50.04.2150		DLZ MV 57164 " G " 10xD RT	ANY
	MP...01	1.328.621.11		PCB	St
	MP...02	1.328.621.02		UNTERLAGE	St
	MP...03	1.328.621.02		UNTERLAGE	St
	MP...04	28.99.0119		NIETE	ANY
	MP...05	28.99.0119		NIETE	ANY
	MP...06	28.99.0119		NIETE	ANY
	MP...07	28.99.0119		NIETE	ANY
	MP...08	1.328.621.01		NR.-ETIKETTE	St
	P....01	54.01.0358		LEISTE 3 x 32 EURO PRINT	ANY
	P....02	54.01.0358		LEISTE 3 x 32 EURO PRINT	ANY
	XDL..01	1.862.813.03		DIODENABSTANDSHALTER	St

S T U D E R (00) 90/06/05 BAD RDP LEVELS PL 1.328.621.00 PAGE 3

(0) 19.03.90 BAD				
	D820MCH REMOTE DISPLAY PANEL			PAGE 2 OF 2
STUDER	RDP LEVELS		SC	1.328.621.00

RDP LEVELS 1.328.621.00

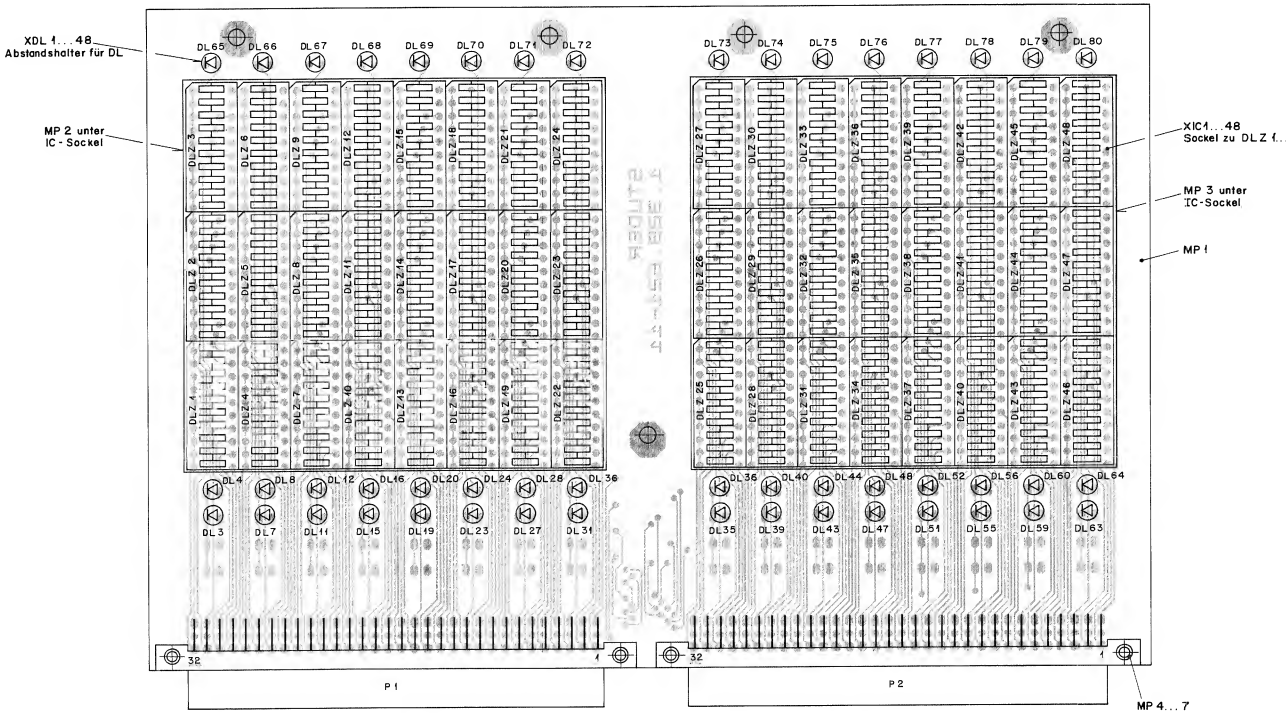

IND.	POS.NO.	PART NO.	VALUE	SPECIFICATIONS / EQUIVALENT	MANUF.
	XDL..02	1.862.813.03		DIODENABSTANDSHALTER	St
	XDL..03	1.862.813.03		DIODENABSTANDSHALTER	St
	XDL..04	1.862.813.03		DIODENABSTANDSHALTER	St
	XDL..05	1.862.813.03		DIODENABSTANDSHALTER	St
	XDL..06	1.862.813.03		DIODENABSTANDSHALTER	St
	XDL..07	1.862.813.03		DIODENABSTANDSHALTER	St
	XDL..08	1.862.813.03		DIODENABSTANDSHALTER	St
	XDL..09	1.862.813.03		DIODENABSTANDSHALTER	St
	XDL..10	1.862.813.03		DIODENABSTANDSHALTER	St
	XDL..11	1.862.813.03		DIODENABSTANDSHALTER	St
	XDL..12	1.862.813.03		DIODENABSTANDSHALTER	St
	XDL..13	1.862.813.03		DIODENABSTANDSHALTER	St
	XDL..14	1.862.813.03		DIODENABSTANDSHALTER	St
	XDL..15	1.862.813.03		DIODENABSTANDSHALTER	St
	XDL..16	1.862.813.03		DIODENABSTANDSHALTER	St
	XDL..17	1.862.813.03		DIODENABSTANDSHALTER	St
	XDL..18	1.862.813.03		DIODENABSTANDSHALTER	St
	XDL..19	1.862.813.03		DIODENABSTANDSHALTER	St
	XDL..20	1.862.813.03		DIODENABSTANDSHALTER	St
	XDL..21	1.862.813.03		DIODENABSTANDSHALTER	St
	XDL..22	1.862.813.03		DIODENABSTANDSHALTER	St
	XDL..23	1.862.813.03		DIODENABSTANDSHALTER	St
	XDL..24	1.862.813.03		DIODENABSTANDSHALTER	St
	XDL..25	1.862.813.03		DIODENABSTANDSHALTER	St
	XDL..26	1.862.813.03		DIODENABSTANDSHALTER	St
	XDL..27	1.862.813.03		DIODENABSTANDSHALTER	St
	XDL..28	1.862.813.03		DIODENABSTANDSHALTER	St
	XDL..29	1.862.813.03		DIODENABSTANDSHALTER	St
	XDL..30	1.862.813.03		DIODENABSTANDSHALTER	St
	XDL..31	1.862.813.03		DIODENABSTANDSHALTER	St
	XDL..32	1.862.813.03		DIODENABSTANDSHALTER	St
	XDL..33	1.862.813.03		DIODENABSTANDSHALTER	St
	XDL..34	1.862.813.03		DIODENABSTANDSHALTER	St
	XDL..35	1.862.813.03		DIODENABSTANDSHALTER	St
	XDL..36	1.862.813.03		DIODENABSTANDSHALTER	St
	XDL..37	1.862.813.03		DIODENABSTANDSHALTER	St
	XDL..38	1.862.813.03		DIODENABSTANDSHALTER	St

IND.	POS.NO.	PART NO.	VALUE	SPECIFICATIONS / EQUIVALENT	MANUF.
	XDL..39	1.862.813.03		DIODENABSTANDSHALTER	St
	XDL..40	1.862.813.03		DIODENABSTANDSHALTER	St
	XDL..41	1.862.813.03		DIODENABSTANDSHALTER	St
	XDL..42	1.862.813.03		DIODENABSTANDSHALTER	St
	XDL..43	1.862.813.03		DIODENABSTANDSHALTER	St
	XDL..44	1.862.813.03		DIODENABSTANDSHALTER	St
	XDL..45	1.862.813.03		DIODENABSTANDSHALTER	St
	XDL..46	1.862.813.03		DIODENABSTANDSHALTER	St
	XDL..47	1.862.813.03		DIODENABSTANDSHALTER	St
	XDL..48	1.862.813.03		DIODENABSTANDSHALTER	St
	XIC..01	53.99.0125		XIC DIL 20-POL (53.03.0165)	ANY
	XIC..02	53.99.0125		XIC DIL 20-POL (53.03.0165)	ANY
	XIC..03	53.99.0125		XIC DIL 20-POL (53.03.0165)	ANY
	XIC..04	53.99.0125		XIC DIL 20-POL (53.03.0165)	ANY
	XIC..05	53.99.0125		XIC DIL 20-POL (53.03.0165)	ANY
	XIC..06	53.99.0125		XIC DIL 20-POL (53.03.0165)	ANY
	XIC..07	53.99.0125		XIC DIL 20-POL (53.03.0165)	ANY
	XIC..08	53.99.0125		XIC DIL 20-POL (53.03.0165)	ANY
	XIC..09	53.99.0125		XIC DIL 20-POL (53.03.0165)	ANY
	XIC..10	53.99.0125		XIC DIL 20-POL (53.03.0165)	ANY
	XIC..11	53.99.0125		XIC DIL 20-POL (53.03.0165)	ANY
	XIC..12	53.99.0125		XIC DIL 20-POL (53.03.0165)	ANY
	XIC..13	53.99.0125		XIC DIL 20-POL (53.03.0165)	ANY
	XIC..14	53.99.0125		XIC DIL 20-POL (53.03.0165)	ANY
	XIC..15	53.99.0125		XIC DIL 20-POL (53.03.0165)	ANY
	XIC..16	53.99.0125		XIC DIL 20-POL (53.03.0165)	ANY
	XIC..17	53.99.0125		XIC DIL 20-POL (53.03.0165)	ANY
	XIC..18	53.99.0125		XIC DIL 20-POL (53.03.0165)	ANY
	XIC..19	53.99.0125		XIC DIL 20-POL (53.03.0165)	ANY
	XIC..20	53.99.0125		XIC DIL 20-POL (53.03.0165)	ANY
	XIC..21	53.99.0125		XIC DIL 20-POL (53.03.0165)	ANY
	XIC..22	53.99.0125		XIC DIL 20-POL (53.03.0165)	ANY
	XIC..23	53.99.0125		XIC DIL 20-POL (53.03.0165)	ANY
	XIC..24	53.99.0125		XIC DIL 20-POL (53.03.0165)	ANY
	XIC..25	53.99.0125		XIC DIL 20-POL (53.03.0165)	ANY
	XIC..26	53.99.0125		XIC DIL 20-POL (53.03.0165)	ANY

IND.	POS.NO.	PART NO.	VALUE	SPECIFICATIONS / EQUIVALENT	MANUF.
	XIC..27	53.99.0125		XIC DIL 20-POL (53.03.0165)	ANY
	XIC..28	53.99.0125		XIC DIL 20-POL (53.03.0165)	ANY
	XIC..29	53.99.0125		XIC DIL 20-POL (53.03.0165)	ANY
	XIC..30	53.99.0125		XIC DIL 20-POL (53.03.0165)	ANY
	XIC..31	53.99.0125		XIC DIL 20-POL (53.03.0165)	ANY
	XIC..32	53.99.0125		XIC DIL 20-POL (53.03.0165)	ANY
	XIC..33	53.99.0125		XIC DIL 20-POL (53.03.0165)	ANY
	XIC..34	53.99.0125		XIC DIL 20-POL (53.03.0165)	ANY
	XIC..35	53.99.0125		XIC DIL 20-POL (53.03.0165)	ANY
	XIC..36	53.99.0125		XIC DIL 20-POL (53.03.0165)	ANY
	XIC..37	53.99.0125		XIC DIL 20-POL (53.03.0165)	ANY
	XIC..38	53.99.0125		XIC DIL 20-POL (53.03.0165)	ANY
	XIC..39	53.99.0125		XIC DIL 20-POL (53.03.0165)	ANY
	XIC..40	53.99.0125		XIC DIL 20-POL (53.03.0165)	ANY
	XIC..41	53.99.0125		XIC DIL 20-POL (53.03.0165)	ANY
	XIC..42	53.99.0125		XIC DIL 20-POL (53.03.0165)	ANY
	XIC..43	53.99.0125		XIC DIL 20-POL (53.03.0165)	ANY
	XIC..44	53.99.0125		XIC DIL 20-POL (53.03.0165)	ANY
	XIC..45	53.99.0125		XIC DIL 20-POL (53.03.0165)	ANY
	XIC..46	53.99.0125		XIC DIL 20-POL (53.03.0165)	ANY
	XIC..47	53.99.0125		XIC DIL 20-POL (53.03.0165)	ANY
	XIC..48	53.99.0125		XIC DIL 20-POL (53.03.0165)	ANY

IND.	POS.NO.	PART NO.	VALUE	SPECIFICATIONS / EQUIVALENT	MANUF.

REMARKS:

MANUFACTURERS:
St = STUDER / Ph = PHILIPS / So = SONY

ABBREVIATIONS:
CER = CERAMIC / FILM = FILM TYPE / XF = CLAMP FOR FUSES /
XIC = IC SOCKET

ORIG 90/06/05

RDP DRIVERS 1.328.622.00

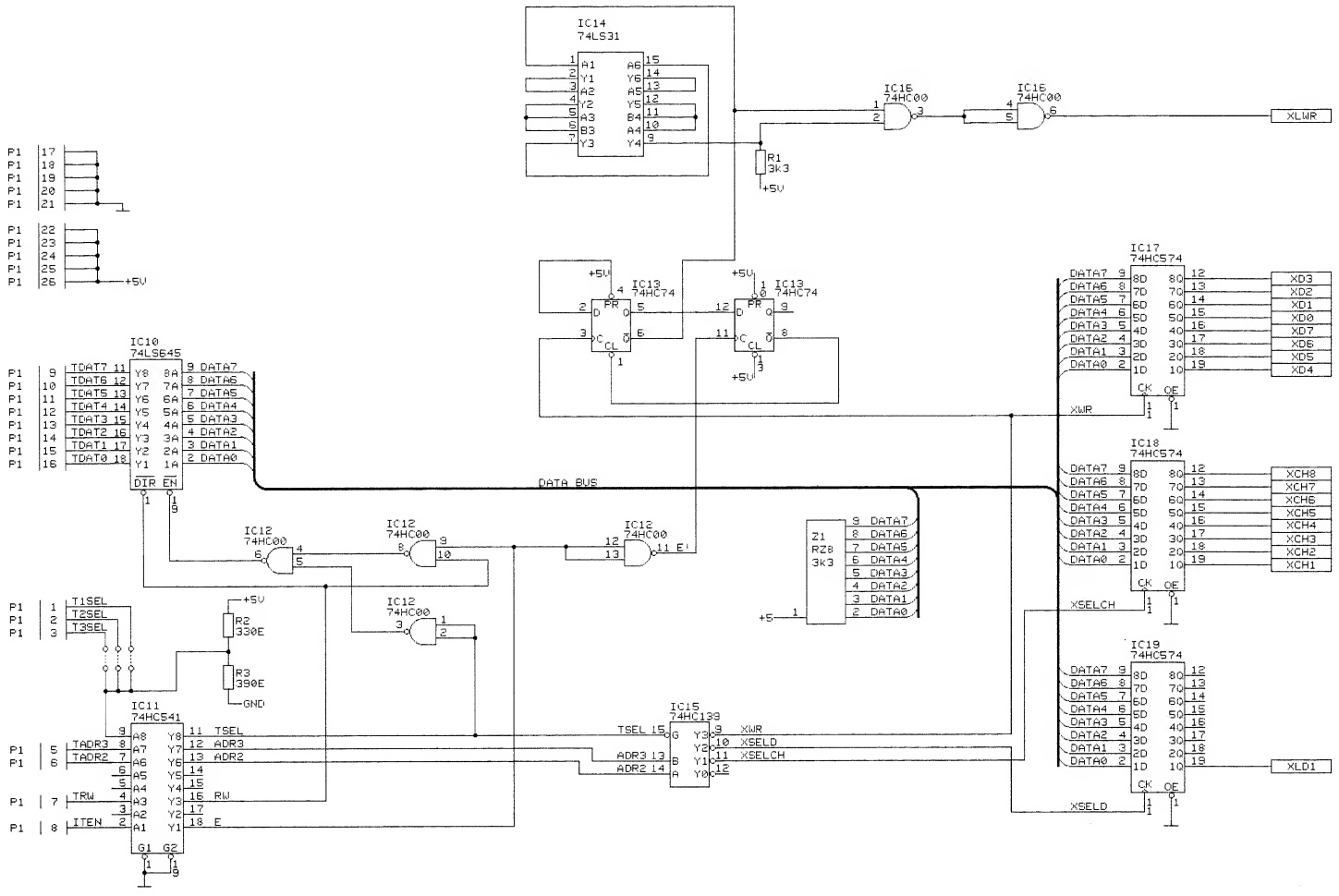

15.03.90 BAD			
	D820MCH REMOTE DISPLAY PANEL		PAGE 1 OF 2
STUDER	RDP DRIVERS	SC	1.328.622-00

RDP DRIVERS 1.328.622.00

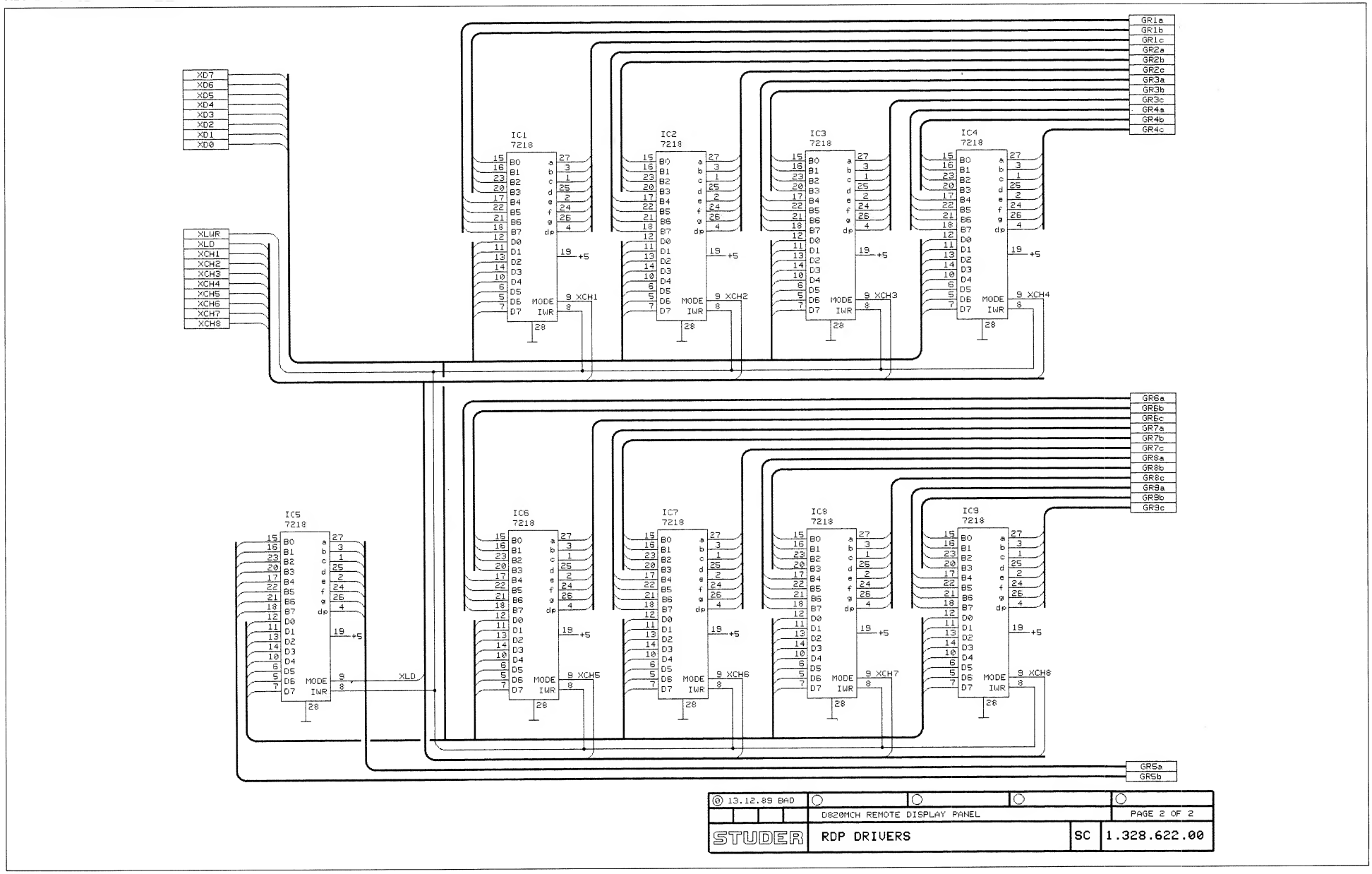

RDP DRIVERS 1.328.622.00

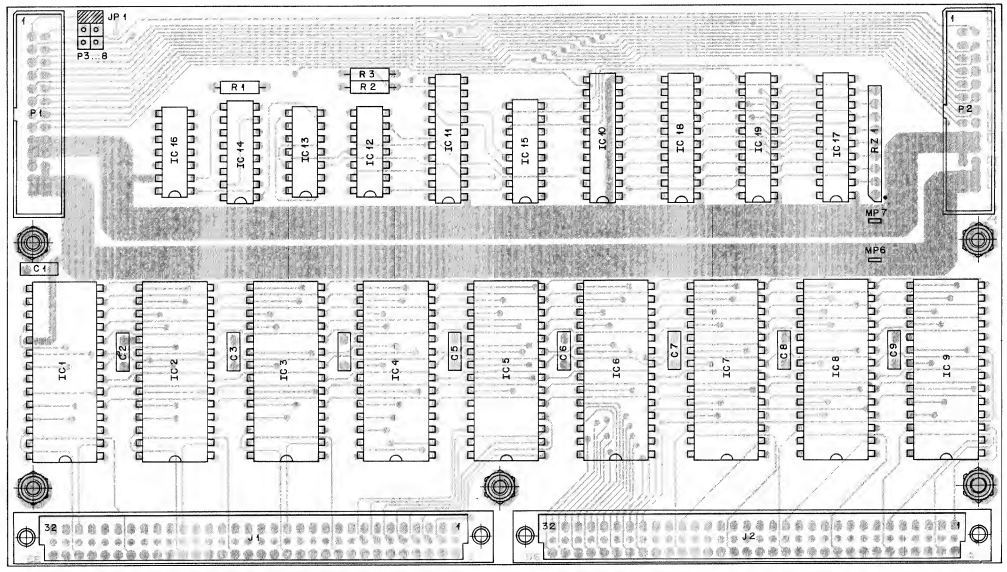

IND.	POS.NO.	PART NO.	VALUE	SPECIFICATIONS / EQUIVALENT	MANUF.
	C....01	59.06.0683	68 n	10%, 63V , PETP	ANY
	C....02	59.06.0683	68 n	10%, 63V , PETP	ANY
	C....03	59.06.0683	68 n	10%, 63V , PETP	ANY
	C....04	59.06.0683	68 n	10%, 63V , PETP	ANY
	C....05	59.06.0683	68 n	10%, 63V , PETP	ANY
	C....06	59.06.0683	68 n	10%, 63V , PETP	ANY
	C....07	59.06.0683	68 n	10%, 63V , PETP	ANY
	C....08	59.06.0683	68 n	10%, 63V , PETP	ANY
	C....09	59.06.0683	68 n	10%, 63V , PETP	ANY
	IC...01	50.07.0035		ICM 7218 AIJI	ANY
	IC...02	50.07.0035		ICM 7218 AIJI	ANY
	IC...03	50.07.0035		ICM 7218 AIJI	ANY
	IC...04	50.07.0035		ICM 7218 AIJI	ANY
	IC...05	50.07.0035		ICM 7218 AIJI	ANY
	IC...06	50.07.0035		ICM 7218 AIJI	ANY
	IC...07	50.07.0035		ICM 7218 AIJI	ANY
	IC...08	50.07.0035		ICM 7218 AIJI	ANY
	IC...09	50.07.0035		ICM 7218 AIJI	ANY
	IC...10	50.06.1645		SN 74 LS 645-1N	ANY
	IC...11	50.17.1541		74 HC 541	ANY
	IC...12	50.17.1000		74 HC 00	ANY
	IC...13	50.17.1074		74 HC 74	ANY
	IC...14	50.06.0031		SN 74 LS 31 N	ANY
	IC...15	50.17.1139		74 HC 139	ANY
	IC...16	50.17.1000		74 HC 00	ANY
	IC...17	50.17.1574		74 HC 574	ANY
	IC...18	50.17.1574		74 HC 574	ANY
	IC...19	50.17.1574		74 HC 574	ANY
	J....01	54.11.2024		EURO 3 x 32, TYP C, PRINT	ANY
	J....02	54.11.2024		EURO 3 x 32, TYP C, PRINT	ANY
	JP...01	54.01.0021		BRUECKE 2463	ANY
	MP...01	1.328.622.11		PCB	St
	MP...02	1.328.622.01		NR.-ETIKETTE	St

IND.	POS.NO.	PART NO.	VALUE	SPECIFICATIONS / EQUIVALENT	MANUF.
	MP...04	43.01.0108		ESE-WARNSCHILD	St
	MP...06	54.02.0320		TESTPOINT	ANY
	MP...07	54.02.0320		TESTPOINT	ANY
	MP...08	1.010.043.22		NIETMUTTER M3 x 20	ANY
	MP...09	1.010.043.22		NIETMUTTER M3 x 20	ANY
	MP...10	1.010.043.22		NIETMUTTER M3 x 20	ANY
	MP...11	1.010.043.22		NIETMUTTER M3 x 20	ANY
	MP...12	1.010.043.22		NIETMUTTER M3 x 20	ANY
	MP...13	28.21.1380		ROHRNIETE	ANY
	MP...14	28.21.1380		ROHRNIETE	ANY
	MP...15	28.21.1380		ROHRNIETE	ANY
	MP...16	28.21.1380		ROHRNIETE	ANY
	P....01	54.14.2003		P STECKER 26 P , SN, GERADE	ANY
	P....02	54.14.2003		P STECKER 26 P , SN, GERADE	ANY
	P....03	54.01.0020		STIFT .63x.63, H=5.8/3.4	ANY
	P....04	54.01.0020		STIFT .63x.63, H=5.8/3.4	ANY
	P....05	54.01.0020		STIFT .63x.63, H=5.8/3.4	ANY
	P....06	54.01.0020		STIFT .63x.63, H=5.8/3.4	ANY
	P....07	54.01.0020		STIFT .63x.63, H=5.8/3.4	ANY
	P....08	54.01.0020		STIFT .63x.63, H=5.8/3.4	ANY
	R....01	57.11.3332	3.3 k	1%, 0207 , MF	ANY
	R....02	57.11.3331	330 E	1%, 0207 , MF	ANY
	R....03	57.11.3391	390 E	1%, 0207 , MF	ANY
	RZ...01	57.88.4332		8 x 3.3 K, 2%, SIP 9	ANY

IND.	POS.NO.	PART NO.	VALUE	SPECIFICATIONS / EQUIVALENT	MANUF.

REMARKS:

MANUFACTURERS:
St = STUDER / Ph = PHILIPS / Sc = SONY

ABBREVIATIONS:
CER = CERAMIC / FILM = FILM TYPE / XF = CLAMP FOR FUSES /
XIC = IC SOCKET

ORIG 90/06/05

RDP CONTROL KEYS 1.328.623.00

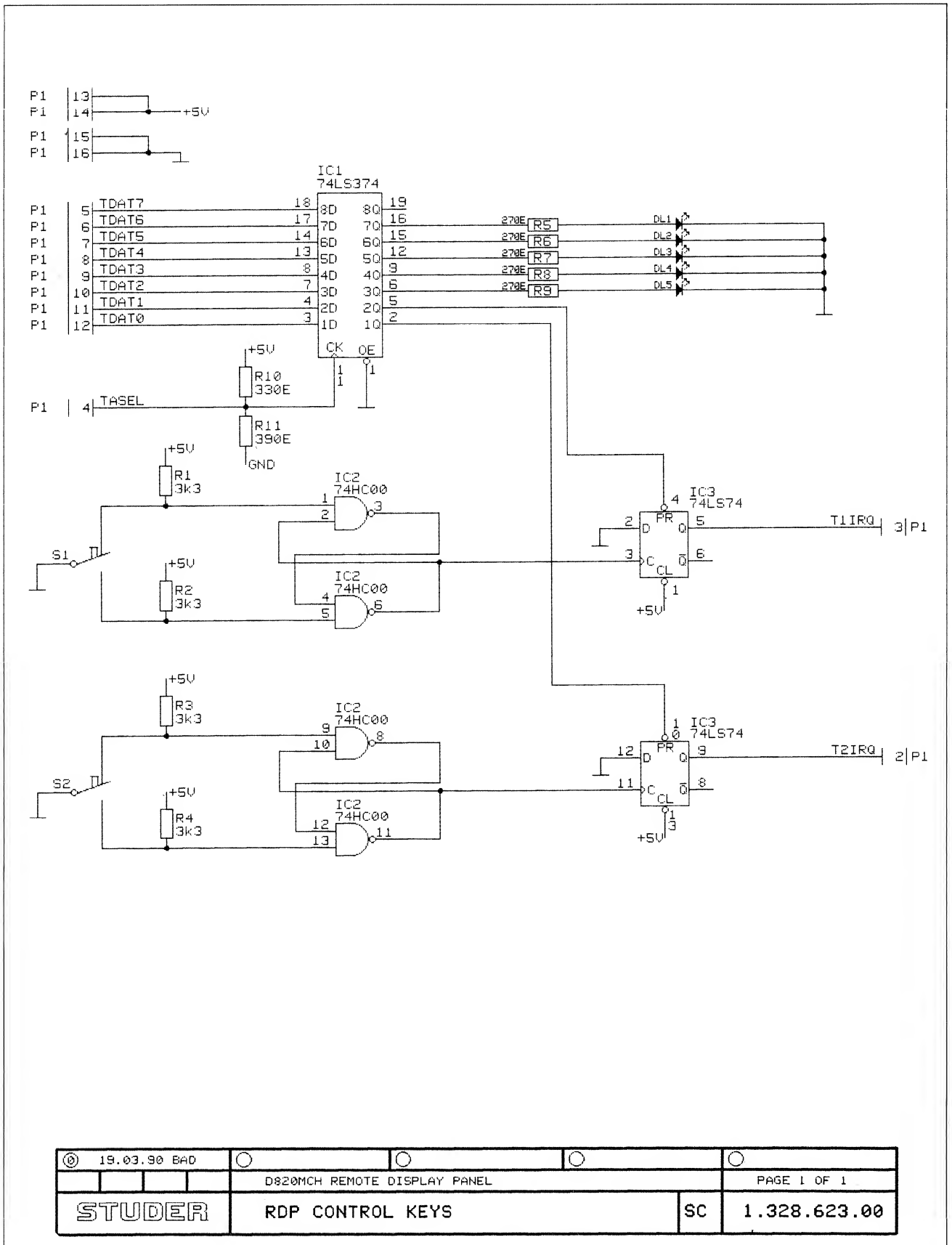

19.03.90 BAD			
	D820MCH REMOTE DISPLAY PANEL		PAGE 1 OF 1
STUDER	RDP CONTROL KEYS	SC	1.328.623.00

RDP CONTROL KEYS 1.328.623.00

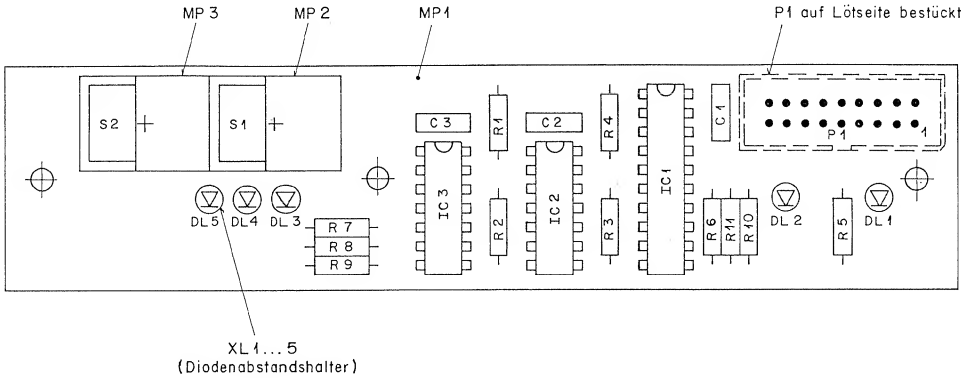

IND.	POS.NO.	PART NO.	VALUE	SPECIFICATIONS / EQUIVALENT	MANUF.
	C....01	59.06.0683	68 n	10%, 63V , PETP	ANY
	C....02	59.06.0683	68 n	10%, 63V , PETP	ANY
	C....03	59.06.0683	68 n	10%, 63V , PETP	ANY
	DL...01	50.04.2129		LS 3360 RT DIFF	ANY
	DL...02	50.04.2129		LS 3360 RT DIFF	ANY
	DL...03	50.04.2152		HLMP 1440 GB CLEAR	ANY
	DL...04	50.04.2152		HLMP 1440 GB CLEAR	ANY
	DL...05	50.04.2152		HLMP 1440 GB CLEAR	ANY
	IC...01	50.06.0374		74 LS 374 N	ANY
	IC...02	50.17.1000		74 HC 00	ANY
	IC...03	50.06.0074		F4 LS 74 N	ANY
	MP...01	1.328.623.11		PCB	St
	MP...02	55.15.0510		KNOPF HOCH, SW, ZU 0501	ANY
	MP...03	55.15.0510		KNOPF HOCH, SW, ZU 0501	ANY
	MP...04	1.328.623.01		NR.-ETIKETTE	St
	MP...06	43.01.0108		ESE-WARNSCHILD	ANY
	P....01	54.14.2102		P STECKER 16 P , SN, GERADE	ANY
	R....01	57.11.3332	3.3 K	1%, 0207 , MF	ANY
	R....02	57.11.3332	3.3 K	1%, 0207 , MF	ANY
	R....03	57.11.3332	3.3 K	1%, 0207 , MF	ANY
	R....04	57.11.3332	3.3 K	1%, 0207 , MF	ANY
	R....05	57.11.3271	270 E	1%, 0207 , MF	ANY
	R....06	57.11.3271	270 E	1%, 0207 , MF	ANY
	R....07	57.11.3271	270 E	1%, 0207 , MF	ANY
	R....08	57.11.3271	270 E	1%, 0207 , MF	ANY
	R....09	57.11.3271	270 E	1%, 0207 , MF	ANY
	R....10	57.11.3331	330 E	1%, 0207 , MF	ANY
	R....11	57.11.3391	390 E	1%, 0207 , MF	ANY
	S....01	55.15.0501		TASTE 1*U, IMPULS	ANY
	S....02	55.15.0501		TASTE 1*U, IMPULS	ANY

S T U D E R (00) 90/06/05 BAD RDP CONTROL KEYS PL 1.328.623.00 PAGE 1

IND.	POS.NO.	PART NO.	VALUE	SPECIFICATIONS / EQUIVALENT	MANUF.
	XL...01	1.862.813.03		DIODENABSTANDHALTER	St
	XL...02	1.862.813.03		DIODENABSTANDHALTER	St
	XL...03	1.862.813.03		DIODENABSTANDHALTER	St
	XL...04	1.862.813.03		DIODENABSTANDHALTER	St
	XL...05	1.862.813.03		DIODENABSTANDHALTER	St

REMARKS:

MANUFACTURERS:
St = STUDER / Ph = PHILIPS / So = SONY

ABBREVIATIONS:
CER = CERAMIC / FILM = FILM TYPE / XF = CLAMP FOR FUSES /
XIC = IC SOCKET

ORIG 90/06/05

S T U D E R (00) 90/06/05 BAD RDP CONTROL KEYS PL 1.328.623.00 PAGE 2

RDP CPU BUS INTERFACE 1.328.624.00

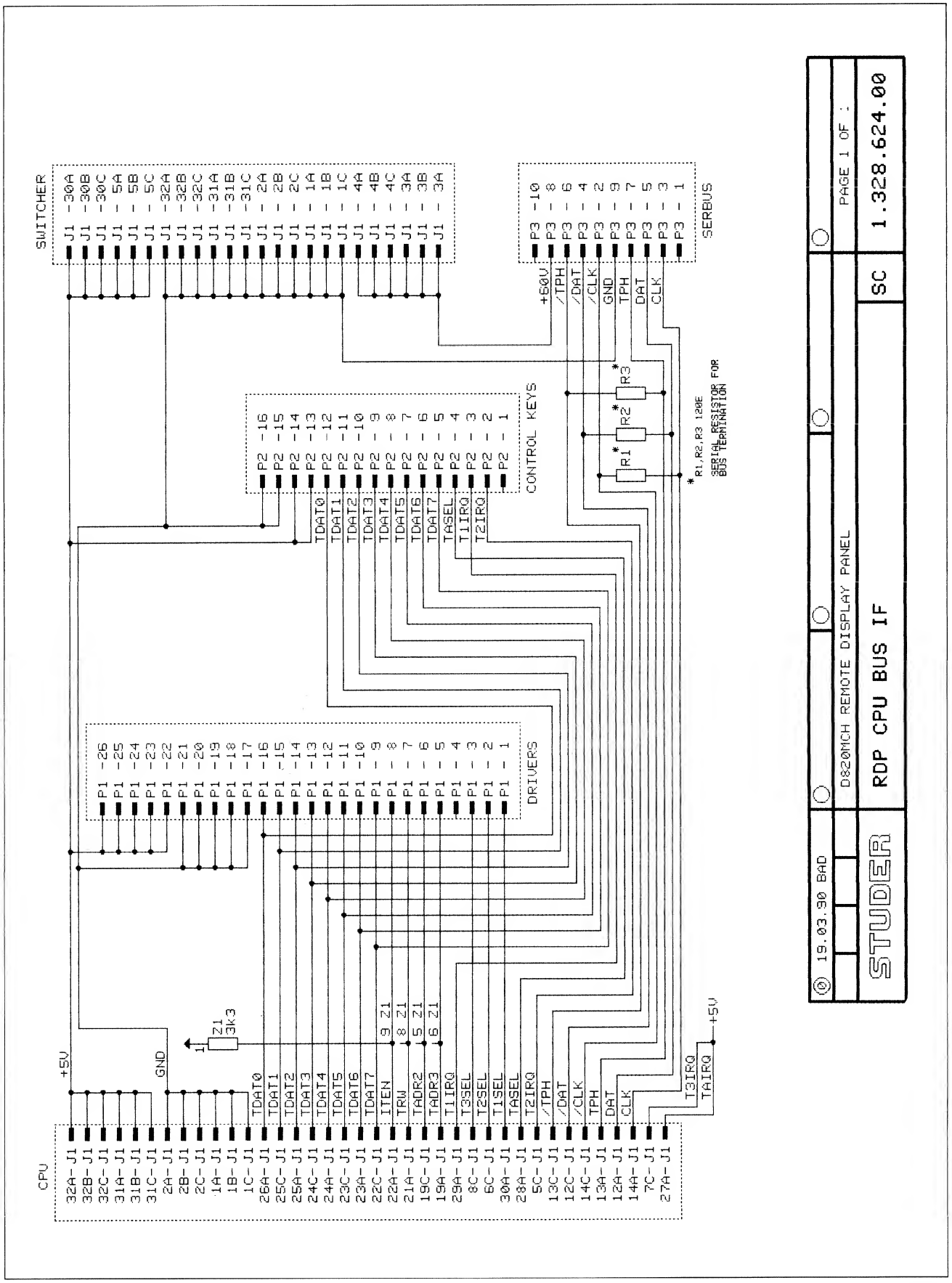

RDP CPU BUS INTERFACE 1.328.624.00

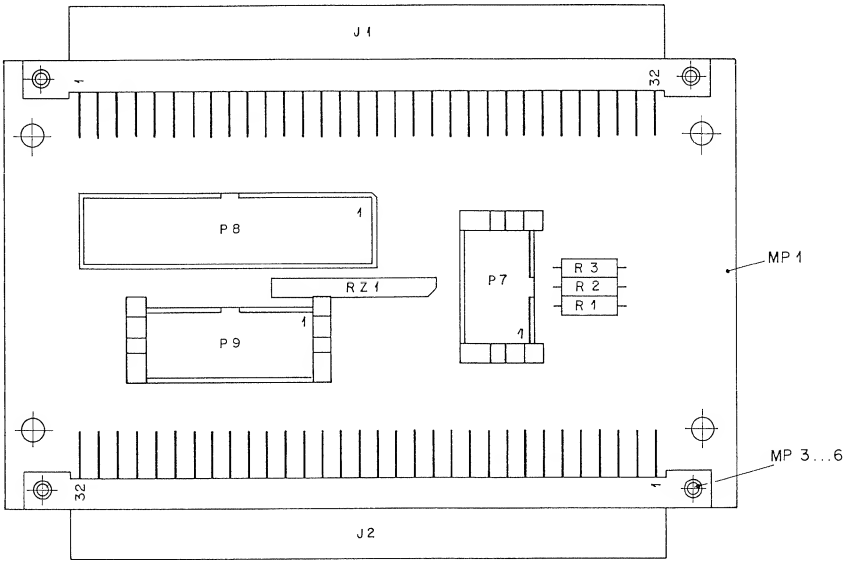

IND.	POS.NO.	PART NO.	VALUE	SPECIFICATIONS / EQUIVALENT	MANUF.
	J....01	54.11.2024		EURO 3 * 32, TYP C, PRINT	ANY
	J....02	54.11.2024		EURO 3 * 32, TYP C, PRINT	ANY
	MP...01	1.328.624.11		PCB	St
	MP...02	1.328.624.01		NR.-ETIKETTE	ANY
	MP...03	28.99.0119		ROHRNIETE	ANY
	MP...04	28.99.0119		ROHRNIETE	ANY
	MP...05	28.99.0119		ROHRNIETE	ANY
	MP...06	28.99.0119		ROHRNIETE	ANY
	P....01	54.14.2101		P STECKER 10 P , SN, GERADE	ANY
	P....02	54.14.2103		P STECKER 20 P , SN, GERADE	ANY
	P....03	54.14.2102		P STECKER 16 P , SN, GERADE	ANY
	R....01	57.11.3121	120 E	1% , MF	ANY
	R....02	57.11.3121	120 E	1% , MF	ANY
	R....03	57.11.3121	120 E	1% , MF	ANY
	RZ...01	57.88.4332		8 * 3.3 K, 2%, SIP 9	ANY

REMARKS:

MANUFACTURERS:
St = STUDER / Ph = PHILIPS / So = SONY

ABBREVIATIONS:
CER = CERAMIC / FILM = FILM TYPE / XF = CLAMP FOR FUSES /
XIC = IC SOCKET

ORIG 90/06/05

S T U D E R (00) 90/06/05 BAD RDP CPU BUS IF PL 1.328.624.00 PAGE 1

RDP UP 1.328.625.21

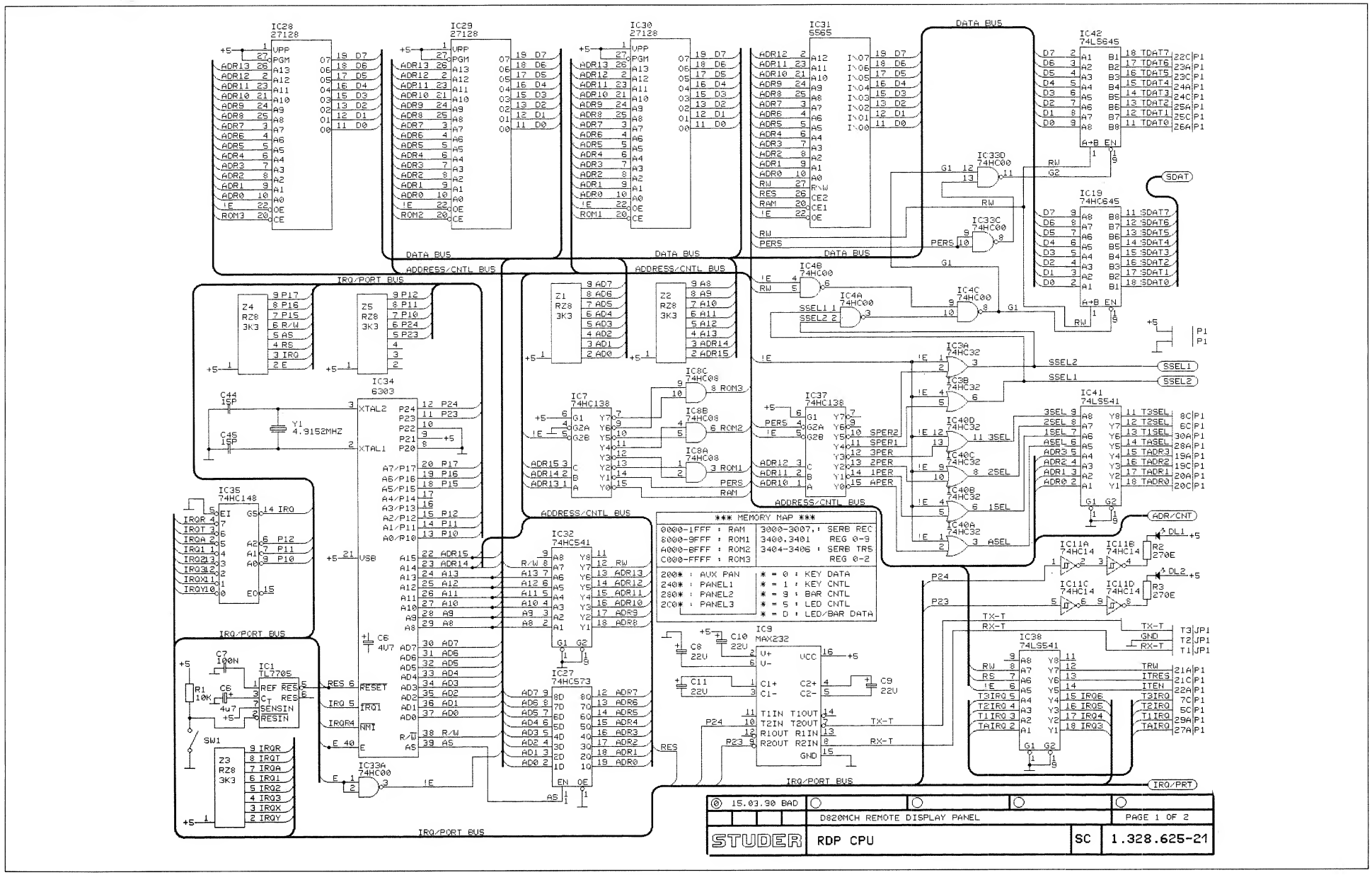

RDP UP 1.328.625.21

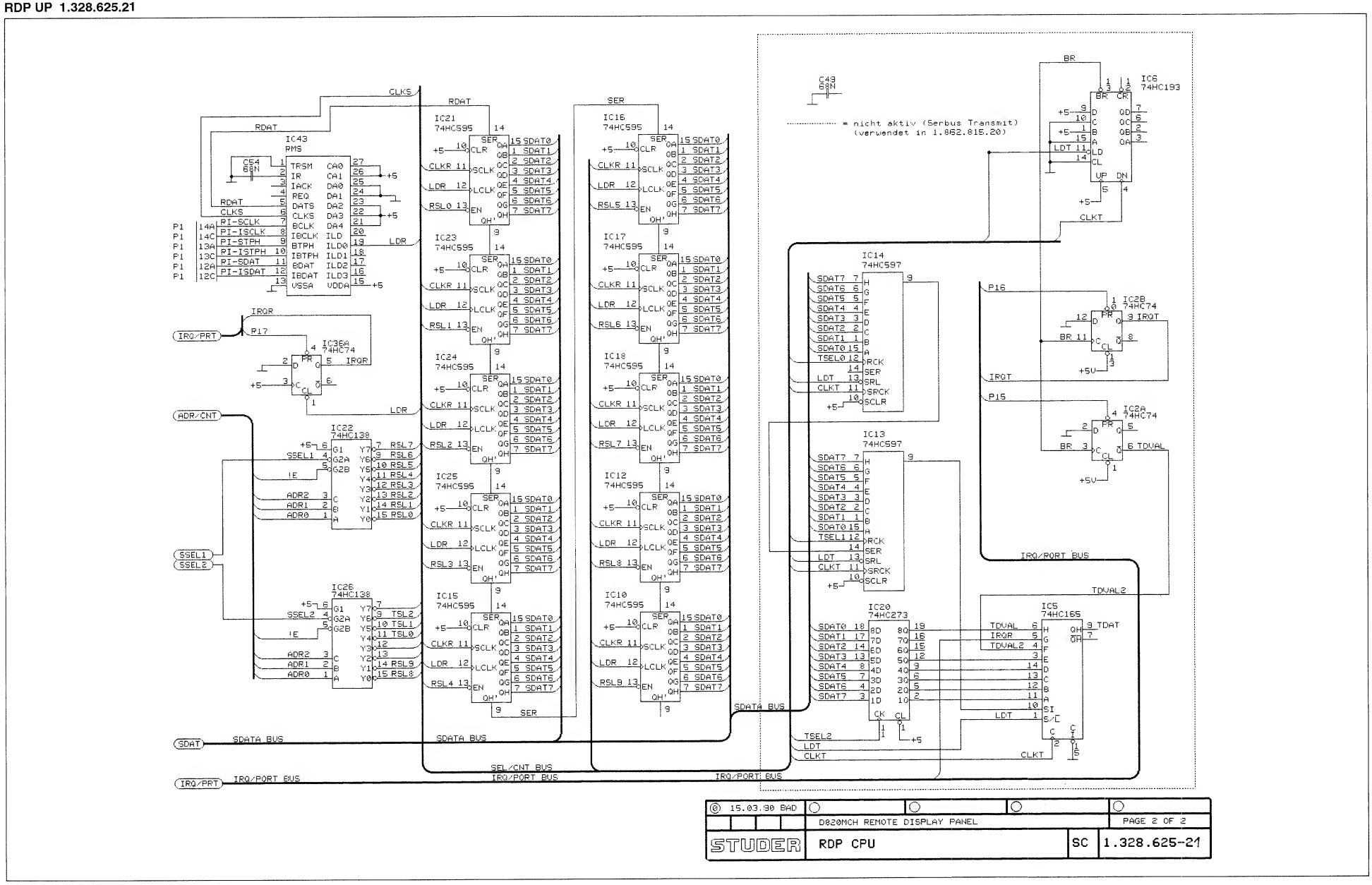

RDP UP 1.328.625.21

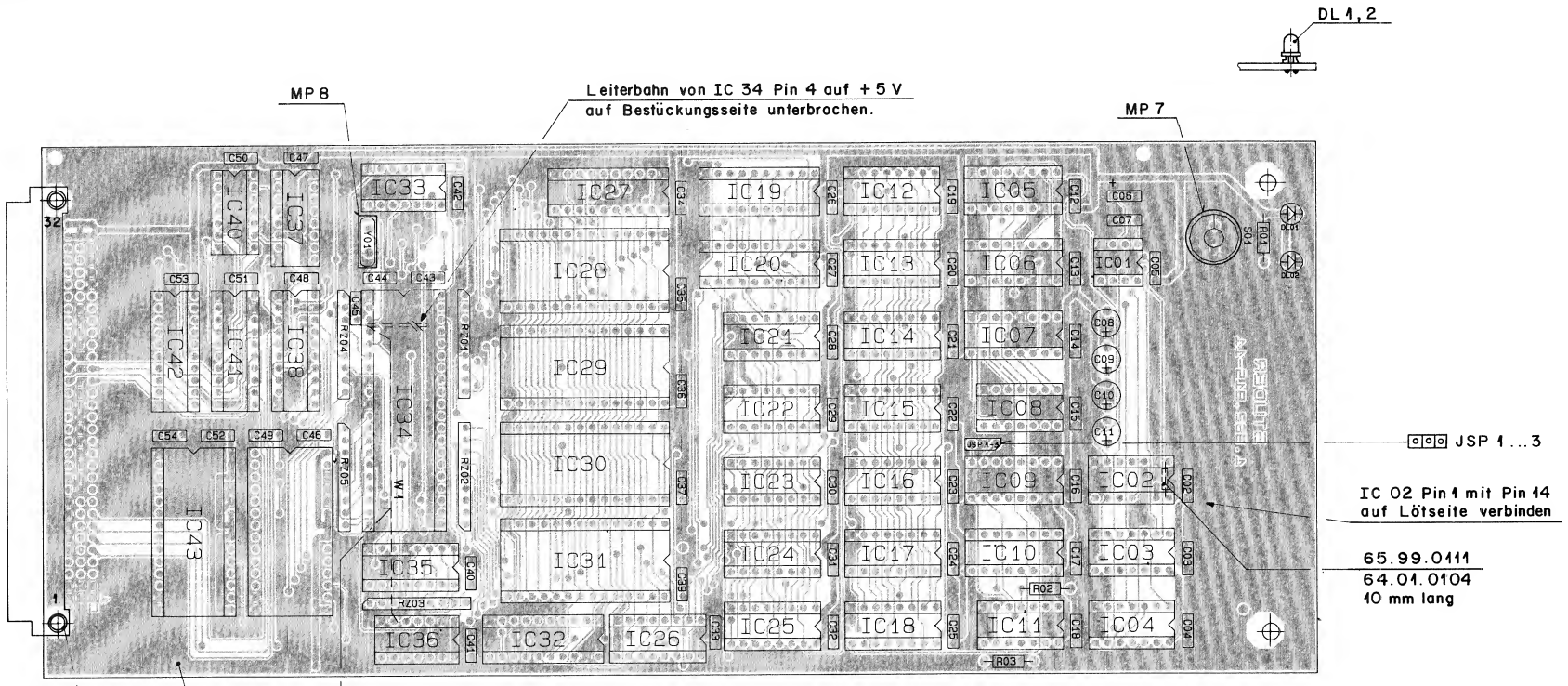

IND.	POS.NO.	PART NO.	VALUE	SPECIFICATIONS / EQUIVALENT	MANUF.
	C.....2	59.06.0683	68nF	10%, 63V	ANY
	C.....3	59.06.0683	68nF	10%, 63V	ANY
	C.....4	59.06.0683	68nF	10%, 63V	ANY
	C.....5	59.06.0683	68nF	10%, 63V	ANY
	C.....6	59.26.1479	4.7uF	20%, 10V	ANY
	C.....7	59.06.0104	100nF	10%, 63V	ANY
	C.....8	59.26.1220	22uF	20%, 10V	ANY
	C.....9	59.26.1220	22uF	20%, 10V	ANY
	C.....10	59.26.1220	22uF	20%, 10V	ANY
	C.....11	59.26.1220	22uF	20%, 10V	ANY
	C.....12	59.06.0683	68nF	10%, 63V	ANY
	C.....13	59.06.0683	68nF	10%, 63V	ANY
	C.....14	59.06.0683	68nF	10%, 63V	ANY
	C.....15	59.06.0683	68nF	10%, 63V	ANY
	C.....16	59.06.0683	68nF	10%, 63V	ANY
	C.....17	59.06.0683	68nF	10%, 63V	ANY
	C.....18	59.06.0683	68nF	10%, 63V	ANY
	C.....19	59.06.0683	68nF	10%, 63V	ANY
	C.....20	59.06.0683	68nF	10%, 63V	ANY
	C.....21	59.06.0683	68nF	10%, 63V	ANY
	C.....22	59.06.0683	68nF	10%, 63V	ANY
	C.....23	59.06.0683	68nF	10%, 63V	ANY
	C.....24	59.06.0683	68nF	10%, 63V	ANY
	C.....25	59.06.0683	68nF	10%, 63V	ANY
	C.....26	59.06.0683	68nF	10%, 63V	ANY
	C.....27	59.06.0683	68nF	10%, 63V	ANY
	C.....28	59.06.0683	68nF	10%, 63V	ANY
	C.....29	59.06.0683	68nF	10%, 63V	ANY
	C.....30	59.06.0683	68nF	10%, 63V	ANY
	C.....31	59.06.0683	68nF	10%, 63V	ANY
	C.....32	59.06.0683	68nF	10%, 63V	ANY
	C.....33	59.06.0683	68nF	10%, 63V	ANY
	C.....34	59.06.0683	68nF	10%, 63V	ANY
	C.....35	59.06.0683	68nF	10%, 63V	ANY
	C.....36	59.06.0683	68nF	10%, 63V	ANY
	C.....37	59.06.0683	68nF	10%, 63V	ANY
	C.....39	59.06.0683	68nF	10%, 63V	ANY

S T U D E R (00) 90/06/05 BAD RDP MICROPROCESSOR PL 1.328.625.21 PAGE 1

IND.	POS.NO.	PART NO.	VALUE	SPECIFICATIONS / EQUIVALENT	MANUF.
	C.....40	59.06.0683	68nF	10%, 63V	ANY
	C.....41	59.06.0683	68nF	10%, 63V	ANY
	C.....42	59.06.0683	68nF	10%, 63V	ANY
	C.....43	59.06.0683	68nF	10%, 63V	ANY
	C.....44	59.34.2220	22pF	5%, 63V	ANY
	C.....45	59.34.2220	22pF	5%, 63V	ANY
	C.....46	59.06.0683	68nF	10%, 63V	ANY
	C.....47	59.06.0683	68nF	10%, 63V	ANY
	C.....48	59.06.0683	68nF	10%, 63V	ANY
	C.....49	59.06.0683	68nF	10%, 63V	ANY
	C.....50	59.06.0683	68nF	10%, 63V	ANY
	C.....51	59.06.0683	68nF	10%, 63V	ANY
	C.....52	59.06.0683	68nF	10%, 63V	ANY
	C.....53	59.06.0683	68nF	10%, 63V	ANY
	C.....54	59.06.0683	68nF	10%, 63V	ANY
	DL....1	50.04.2129		LS 3160 (RED)	ANY
	DL....2	50.04.2182		HLMP 1540 (GREEN)	ANY
	IC....1	50.11.0122		TL 7705 ACP	ANY
	IC....2	50.17.1074		74 HC 74	ANY
	IC....3	50.17.1032		74 HC 32	ANY
	IC....4	50.17.1000		74 HC 00	ANY
	IC....5	50.17.1165		74 HC 165	ANY
	IC....6	50.17.1193		74 HC 193	ANY
	IC....7	50.17.1138		74 HC 138	ANY
	IC....8	50.17.1008		74 HC 08	ANY
	IC....9	50.15.0120		MAX 232	ANY
	IC....10	50.17.1595		74 HC 595	ANY
	IC....11	50.17.1014		74 HC 14	ANY
	IC....12	50.17.1595		74 HC 595	ANY
	IC....13	50.17.1597		74 HC 597	ANY
	IC....14	50.17.1597		74 HC 597	ANY
	IC....15	50.17.1595		74 HC 595	ANY
	IC....16	50.17.1595		74 HC 595	ANY
	IC....17	50.17.1595		74 HC 595	ANY
	IC....18	50.17.1595		74 HC 595	ANY

S T U D E R (00) 90/06/05 BAD RDP MICROPROCESSOR PL 1.328.625.21 PAGE 2

IND.	POS.NO.	PART NO.	VALUE	SPECIFICATIONS / EQUIVALENT	MANUF.
	IC...19	50.17.1645		74 HC 645	ANY
	IC...20	50.17.1273		74 HC 273	ANY
	IC...21	50.17.1595		74 HC 595	ANY
	IC...22	50.17.1138		74 HC 138	ANY
	IC...23	50.17.1595		74 HC 595	ANY
	IC...24	50.17.1595		74 HC 595	ANY
	IC...25	50.17.1595		74 HC 595	ANY
	IC...26	50.17.1138		74 HC 138	ANY
	IC...27	50.17.1573		74 HC 573	ANY
	IC...28	50.14.0125		HN 27128A6-25 (SW 1.328.894.21)	ANY
	IC...29	50.14.0125		HN 27128A6-25 (SW 1.328.895.21)	ANY
	IC...31	50.14.0133		HN 62641P-15	ANY
	IC...32	50.17.1541		74 HC 541	ANY
	IC...33	50.17.1000		74 HC 00	ANY
	IC...34	50.16.0119		RH63A03	ANY
	IC...35	50.17.1148		74 HC 148	ANY
	IC...36	50.17.1074		74 HC 74	ANY
	IC...37	50.17.1138		74 HC 138	ANY
	IC...38	50.06.0541		74 LS 541	ANY
	IC...40	50.17.1032		74 HC 32	ANY
	IC...41	50.06.0541		74 LS 541	ANY
	IC...42	50.06.1645		74 LS 645	ANY
	IC...43	50.50.0010		PORTMASTER	ANY
	JSP...1	54.11.0126		JUMPER CONNECTOR	ANY
	JSP...2	54.11.0126		JUMPER CONNECTOR	ANY
	JSP...3	54.11.0126		JUMPER CONNECTOR	ANY
	MP....1	1.862.815.11		PCB	St
	MP....2	28.99.0119		RIVETING NUT, D2.5 * 10	ANY
	MP....3	28.99.0119		RIVETING NUT, D2.5 * 10	ANY
	MP....4	43.01.0108		ESE - Warnechild	ANY
	MP....5	1.328.625.01		ETIK. PRINT.BR.	ST
	MP....6	1.101.001.20		ETIK. HARDWARE	ST
	MP....7	1.010.015.50		ISOLIERSCH. KEY	ST
	MP....8	89.01.1499		ISOLIERSCH. QUARZ	ST

S T U D E R (00) 90/06/05 BAD RDP MICROPROCESSOR PL 1.328.625.21 PAGE 3

IND.	POS.NO.	PART NO.	VALUE	SPECIFICATIONS / EQUIVALENT	MANUF.
	P.....1	54.01.0358		CONNECTOR 3 * 32	ANY
	R.....1	57.11.3103	10 k	1%	ANY
	R.....2	57.11.3271	270 E	1%	ANY
	R.....3	57.11.3271	270 E	1%	ANY
	RZ....1	57.88.4332	3.3 k	8*	ANY
	RZ....2	57.88.4332	3.3 k	8*	ANY
	RZ....3	57.88.4332	3.3 k	8*	ANY
	RZ....4	57.88.4332	3.3 k	8*	ANY
	RZ....5	57.88.4332	3.3 k	8*	ANY
	S.....1	55.03.0122		KEY	ANY
(01)	W.....1	1.010.012.64		WRAP-DRAHT 120 mm	St
	XIC..28	53.03.0173		DIL 28-POL	ANY
	XIC..29	53.03.0173		DIL 28-POL	ANY
	XIC..30	53.03.0173		DIL 28-POL	ANY
	XIC..34	53.03.0172		DIL 40-POL	ANY
	XIC..39	53.03.0173		DIL 28-POL	ANY
	XIC..43	53.03.0173		DIL 28-POL	ANY
	Y.....1	89.01.0560		4.9152 MHZ	ANY

REMARKS:

MANUFACTURERS:
ST = STUDER, Ph = PHILIPS

ABBREVIATIONS:
CER = CERAMIC / FILM = FILM TYPE / XF = CLAMP FOR FUSES /
XIC = IC SOCKET

ORIG 90/06/05

S T U D E R (00) 90/06/05 BAD RDP MICROPROCESSOR PL 1.328.625.21 PAGE 4

BLOCK DIAGRAM

Parallel Audio Interface 1.328.630

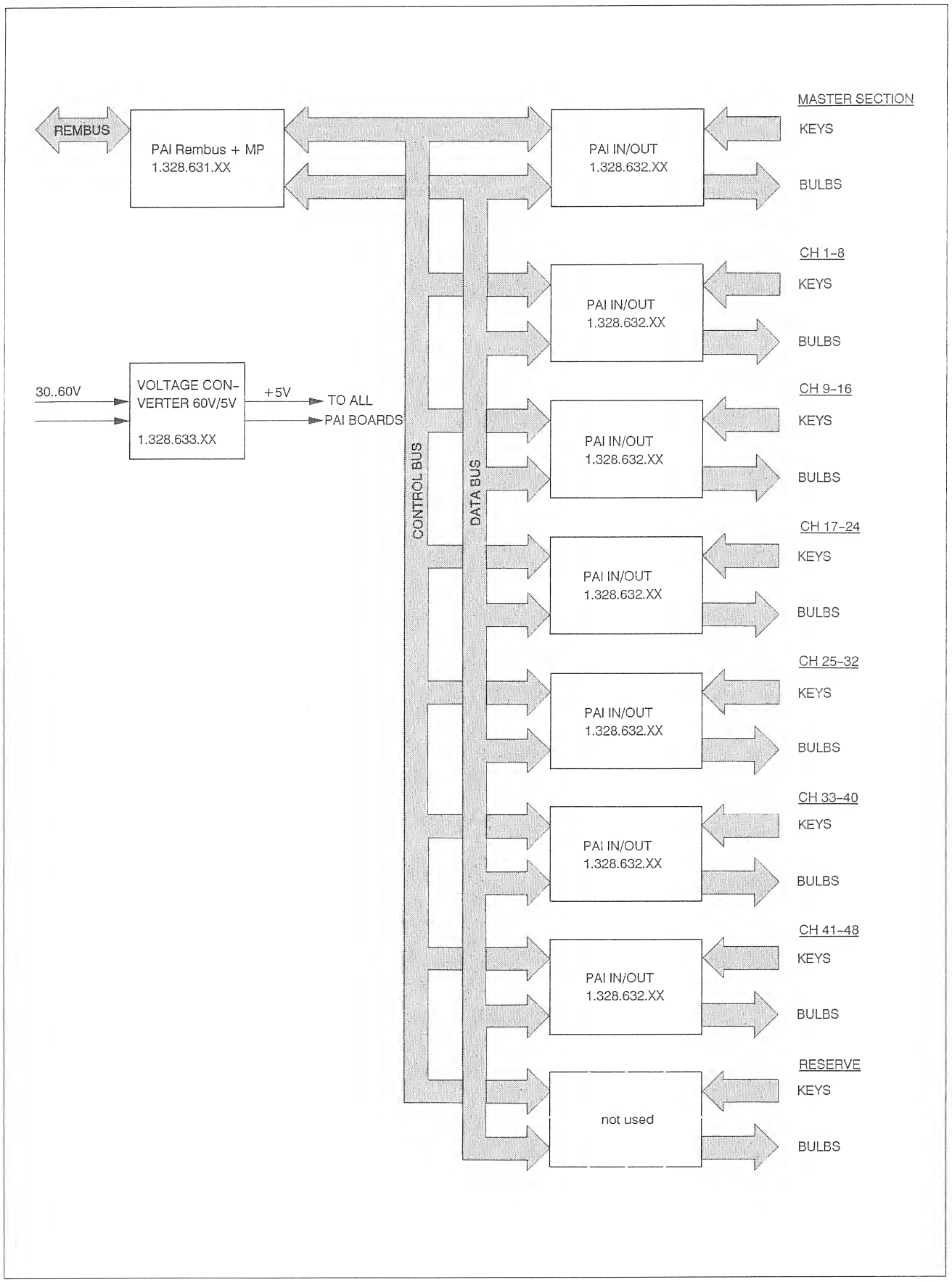

PAI REMBUS + UP 1.328.631.20

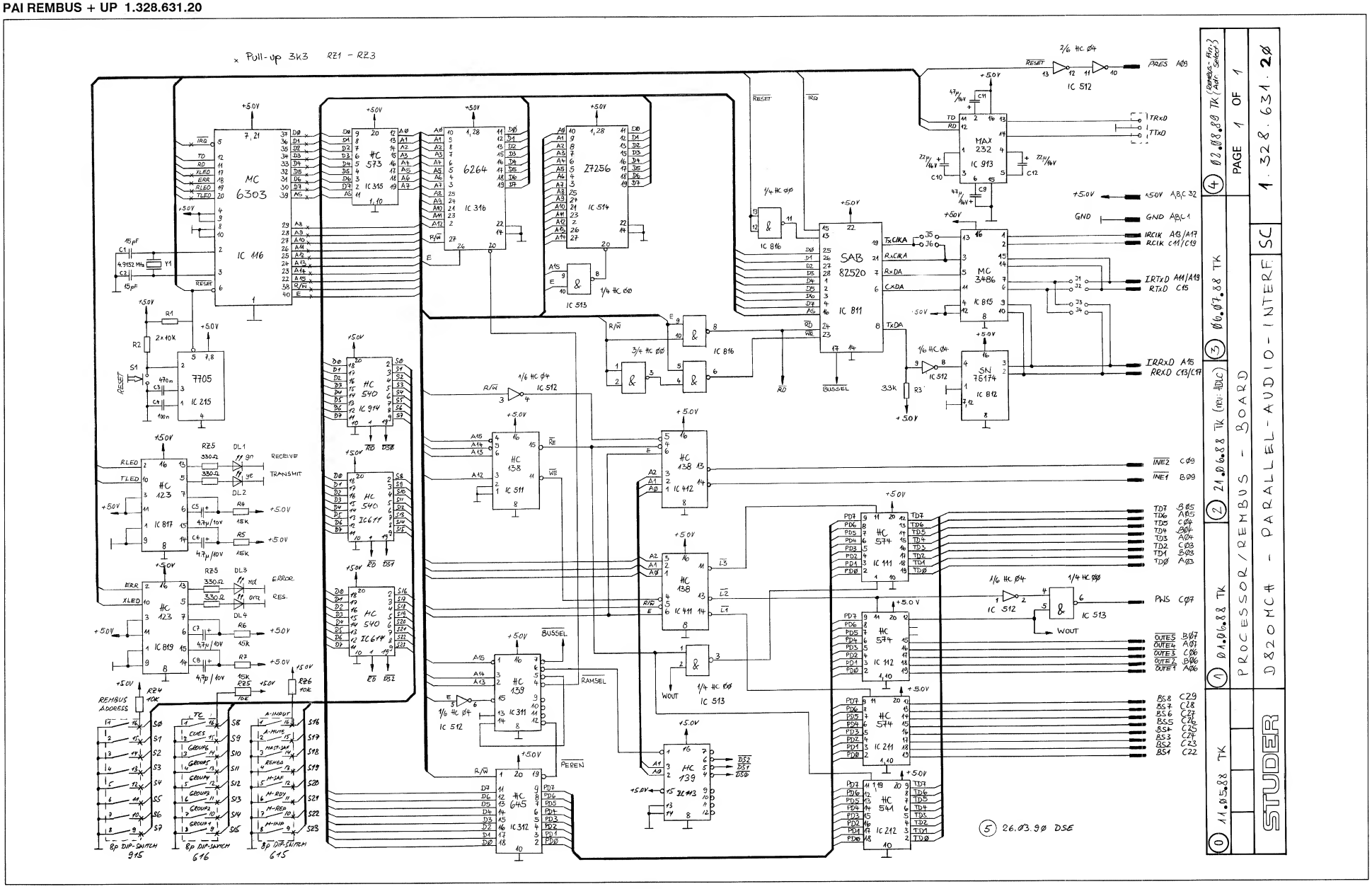

PAI REMBUS + UP 1.328.631.20

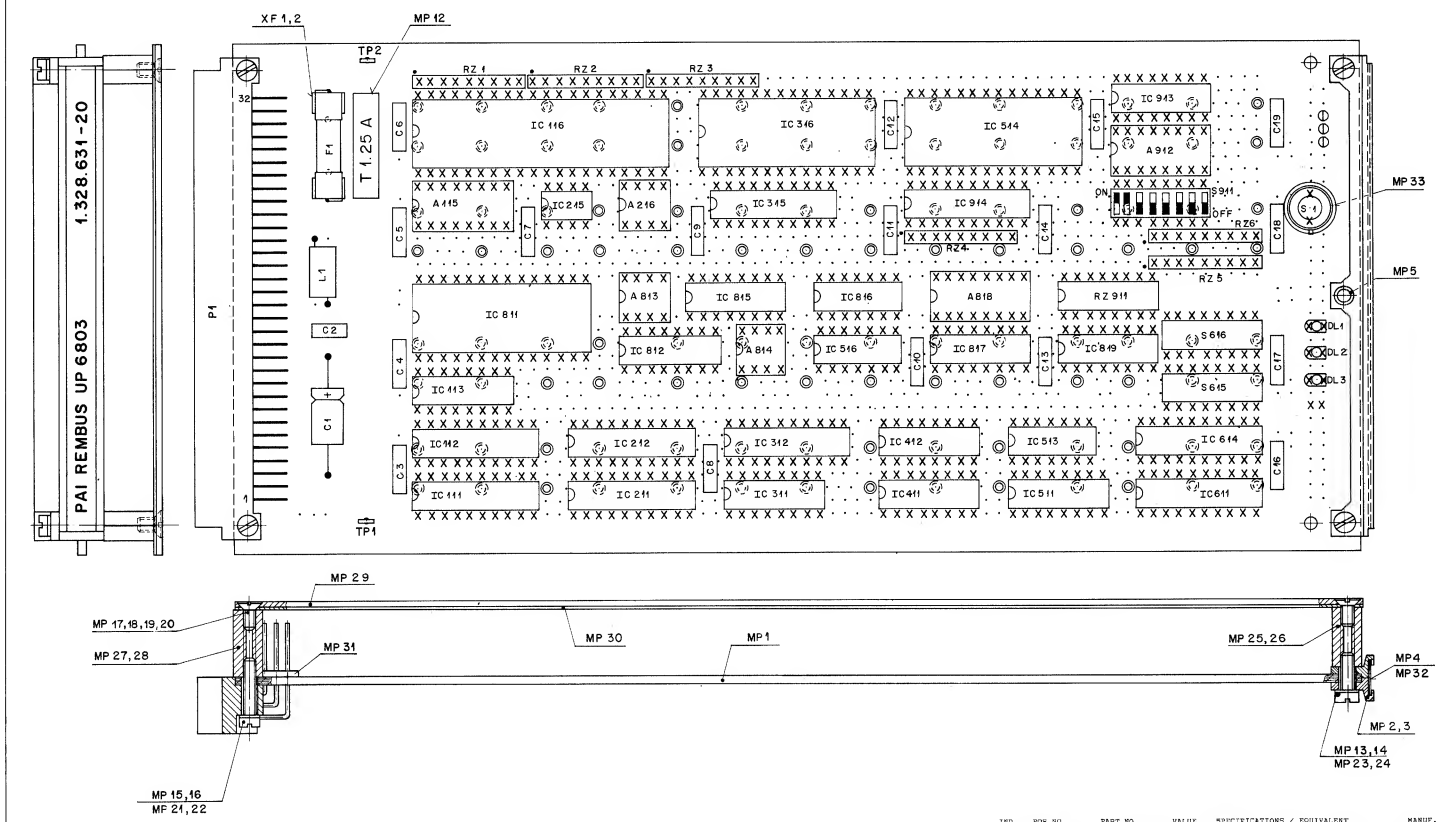

IND.	POS.NO.	PART NO.	VALUE	SPECIFICATIONS / EQUIVALENT	MANUF.
(00)	DL....3	50.04.2141	SPR 3431	XC 209R RT	ANY
(01)	DL....3	50.04.2121		TLUR 2401 RT	ANY
	DL....4			not used	ANY
	F.....1	51.01.0117		T1.0 / 250V, 5 * 20	ANY
	IC..111	50.17.1574		74 HC 574	ANY
	IC..112	50.17.1574		74 HC 574	ANY
	IC..116	50.16.0119		HD 63 A 03 RP	ANY
	IC..211	50.17.1574		74 HC 574	ANY
	IC..212	50.17.1541		74 HC 541	ANY
	IC..213	50.11.0122		TL 7705 ACP	ANY
	IC..311	50.17.1139		74 HC 139	ANY
	IC..312	50.17.1645		74 HC 645	ANY
	IC..315	50.17.1573		74 HC 573	ANY
	IC..316	50.14.0133		HM 62641-P-15	ANY
	IC..411	50.17.1138		74 HC 138	ANY
	IC..412	50.17.1138		74 HC 138	ANY
	IC..511	50.17.1138		74 HC 138	ANY
	IC..512	50.17.1004		74 HC 04	ANY
	IC..513	50.17.1000		74 HC 00	ANY
	IC..514	50.14.2004		HM 27 C256 G-25 (SW 1.328.896.20)	ANY
	IC..811	50.16.0153		SAB 82520-P	ANY
	IC..812	50.15.0121		SN 75174 N	ANY
	IC..815	50.15.0104		MC 3486	ANY
	IC..816	50.17.1000		74 HC 00	ANY
	IC..817	50.17.1123		74 HC 123	ANY
	IC..819	50.17.1123		74 HC 123	ANY
	IC..913	50.15.0120		MAX 232 CPE	ANY
	IC..914	50.17.1540		74 HC 540	ANY
	L.....1	62.01.0115		BREITBAND HF-CHOKE	ANY
	MP....1	1.010.037.49		WRAP-KARTE	St
	MP....2	1.010.006.33		GRIFFHAELFTE	St
	MP....3	1.010.006.33		GRIFFHAELFTE	St
	MP....4	1.010.096.41		KLARSICHTSCHILD	St

S T U D E R (01) 90/02/23 RU PAI REMBUS + PROC. PL 1.328.631.20 PAGE 2

IND.	POS.NO.	PART NO.	VALUE	SPECIFICATIONS / EQUIVALENT	MANUF.
	MP....5	28.21.1370		ROHRNIETE	ANY
(00)	MP....5	28.21.1370		ROHRNIETE	ANY
(01)	MP....6			not used	ANY
(00)	MP....7	28.21.1370		ROHRNIETE	ANY
(01)	MP....7			not used	ANY
(00)	MP....8	28.99.0119		ROHRNIETE	ANY
(01)	MP....8			not used	ANY
(00)	MP....9	28.99.0119		ROHRNIETE	ANY
(01)	MP....9			not used	ANY
	MP...10	1.101.001.20		HARDWARE-ETIKETTE	St
	MP...11	43.01.0108		ESE - SCHILD	ANY
	MP...12	1.010.116.51		ETIKETTE T 1.0A	St
	MP...13	21.01.0280		Z-SCHRAUBE M2.5 x 8	ANY
	MP...14	21.01.0280		Z-SCHRAUBE M2.5 x 8	ANY
	MP...15	21.01.0281		Z-SCHRAUBE M2.5 x 12	ANY
	MP...16	21.01.0281		Z-SCHRAUBE M2.5 x 12	ANY
	MP...17	21.01.2278		SENKSCHRAUBE M2.5 x 5	ANY
	MP...18	21.01.2278		SENKSCHRAUBE M2.5 x 5	ANY
	MP...19	21.01.2278		SENKSCHRAUBE M2.5 x 5	ANY
	MP...20	21.01.2278		SENKSCHRAUBE M2.5 x 5	ANY
	MP...21	24.16.1025		SI-SCHEIBE M2.5	ANY
	MP...22	24.16.1025		SI-SCHEIBE M2.5	ANY
	MP...23	24.16.1025		SI-SCHEIBE M2.5	ANY
	MP...24	24.16.1025		SI-SCHEIBE M2.5	ANY
	MP...25	1.010.209.27		MUTTERBOLZEN M2.5 x 11.5	St
	MP...26	1.010.209.27		MUTTERBOLZEN M2.5 x 11.5	St
	MP...27	1.010.205.27		MUTTERBOLZEN M2.5 x 13	St
	MP...28	1.010.205.27		MUTTERBOLZEN M2.5 x 13	St
	MP...29	1.010.110.49		DECKELBLECH	St
	MP...30	1.010.111.49		ISOLATION	St
	MP...31	1.010.128.49		STIFTFUEHRUNGSPLATTE	St
	MP...32	1.328.631.01		BEZEICHNUNGSSTREIFEN "PAI PROC / REMBUS"	St
	MP...33	1.010.015.50		ISOLIERSCHEIBE ZU S1	St
	P.....1	54.01.0354		LEISTE 3 * 32 WRAP	ANY
	RZ....1	57.88.4332		8 * 3.3 k, 2%, SIP 9	ANY

S T U D E R (01) 90/02/23 RU PAI REMBUS + PROC. PL 1.328.631.20 PAGE 3

IND.	POS.NO.	PART NO.	VALUE	SPECIFICATIONS / EQUIVALENT	MANUF.
	A...115	1.328.644.00		ASSEMBLY 631 - 115	St
	A...216	1.328.645.00		ASSEMBLY 631 - 216	St
	A...813	1.328.646.00		ASSEMBLY 631 - 813	St
	A...814	1.328.647.00		ASSEMBLY 631 - 814	St
	A...818	1.328.648.00		ASSEMBLY 631 - 818	St
	A...912	1.328.649.00		ASSEMBLY 631 - 912	St
	C.....1	59.25.3470	47 u	20%, 16V, XL	ANY
	C.....2	59.06.0683	68 n	10%, 63V, MPETP	ANY
	C.....3	59.99.0267	68 n	10%, 100V, MPETP	ANY
	C.....4	59.99.0267	68 n	10%, 100V, MPETP	ANY
	C.....5	59.99.0267	68 n	10%, 100V, MPETP	ANY
	C.....6	59.99.0267	68 n	10%, 100V, MPETP	ANY
	C.....7	59.99.0267	68 n	10%, 100V, MPETP	ANY
	C.....8	59.99.0267	68 n	10%, 100V, MPETP	ANY
	C.....9	59.99.0267	68 n	10%, 100V, MPETP	ANY
	C....10	59.99.0267	68 n	10%, 100V, MPETP	ANY
	C....11	59.99.0267	68 n	10%, 100V, MPETP	ANY
	C....12	59.99.0267	68 n	10%, 100V, MPETP	ANY
	C....13	59.99.0267	68 n	10%, 100V, MPETP	ANY
	C....14	59.99.0267	68 n	10%, 100V, MPETP	ANY
	C....15	59.99.0267	68 n	10%, 100V, MPETP	ANY
	C....16	59.99.0267	68 n	10%, 100V, MPETP	ANY
	C....17	59.99.0267	68 n	10%, 100V, MPETP	ANY
	C....18	59.99.0267	68 n	10%, 100V, MPETP	ANY
	C....19	59.99.0267	68 n	10%, 100V, MPETP	ANY
	C....20	59.99.0267	68 n	10%, 100V, MPETP	ANY
	C....21	59.99.0267	68 n	10%, 100V, MPETP	ANY
	C....22	59.99.0267	68 n	10%, 100V, MPETP	ANY
	C....23	59.99.0267	68 n	10%, 100V, MPETP	ANY
	C....24	59.99.0267	68 n	10%, 100V, MPETP	ANY
	C....25	59.99.0267	68 n	10%, 100V, MPETP	ANY
(00)	DL....1	50.04.2143	SPG 3431	XC 209G SR	ANY
(01)	DL....1	50.04.2133		TLUS 2401 SR	ANY
(00)	DL....2	50.04.2142	SPY 3431	XC 209Y SB	ANY
(01)	DL....2	50.04.2133		TLUY 2401 SB	ANY

S T U D E R (01) 90/02/23 RU PAI REMBUS + PROC. PL 1.328.631.20 PAGE 1

IND.	POS.NO.	PART NO.	VALUE	SPECIFICATIONS / EQUIVALENT	MANUF.
	RZ....2	57.88.4332		8 * 3.3 k, 2%, SIP 9	ANY
	RZ....3	57.88.4332		8 * 3.3 k, 2%, SIP 9	ANY
	RZ....4	57.88.4103		8 * 10 K, 2%, SIP 9	ANY
	RZ..911	57.88.3331		8 * 330 , 2%, DIL16	ANY
	S.....1	55.03.0122		TASTE 1 * E	ANY
	S...915	55.01.0168		DIL-SWITCH 8*A	ANY
	TP....1	29.21.6002		LOETOESE	ANY
	TP....2	29.21.6002		LOETOESE	ANY
	XF....1	53.03.0142		5 * 20 KLAMMER	ANY
	XF....2	53.03.0142		5 * 20 KLAMMER	ANY

REMARKS:
*** WRAP-BOARD ***

01: LED-Typ: Bohrnieten zuviel

MANUFACTURERS:
St = STUDER / Ph = PHILIPS / So = SONY

ABBREVIATIONS:
CER = CERAMIC / FILM = FILM TYPE / XF = CLAMP FOR FUSES /
XIC = IC SOCKET

ORIG 89/12/20 (01) 90/02/23

S T U D E R (01) 90/02/23 RU PAI REMBUS + PROC. PL 1.328.631.20 PAGE 4

PAI IN/OUT 1.328.632.00

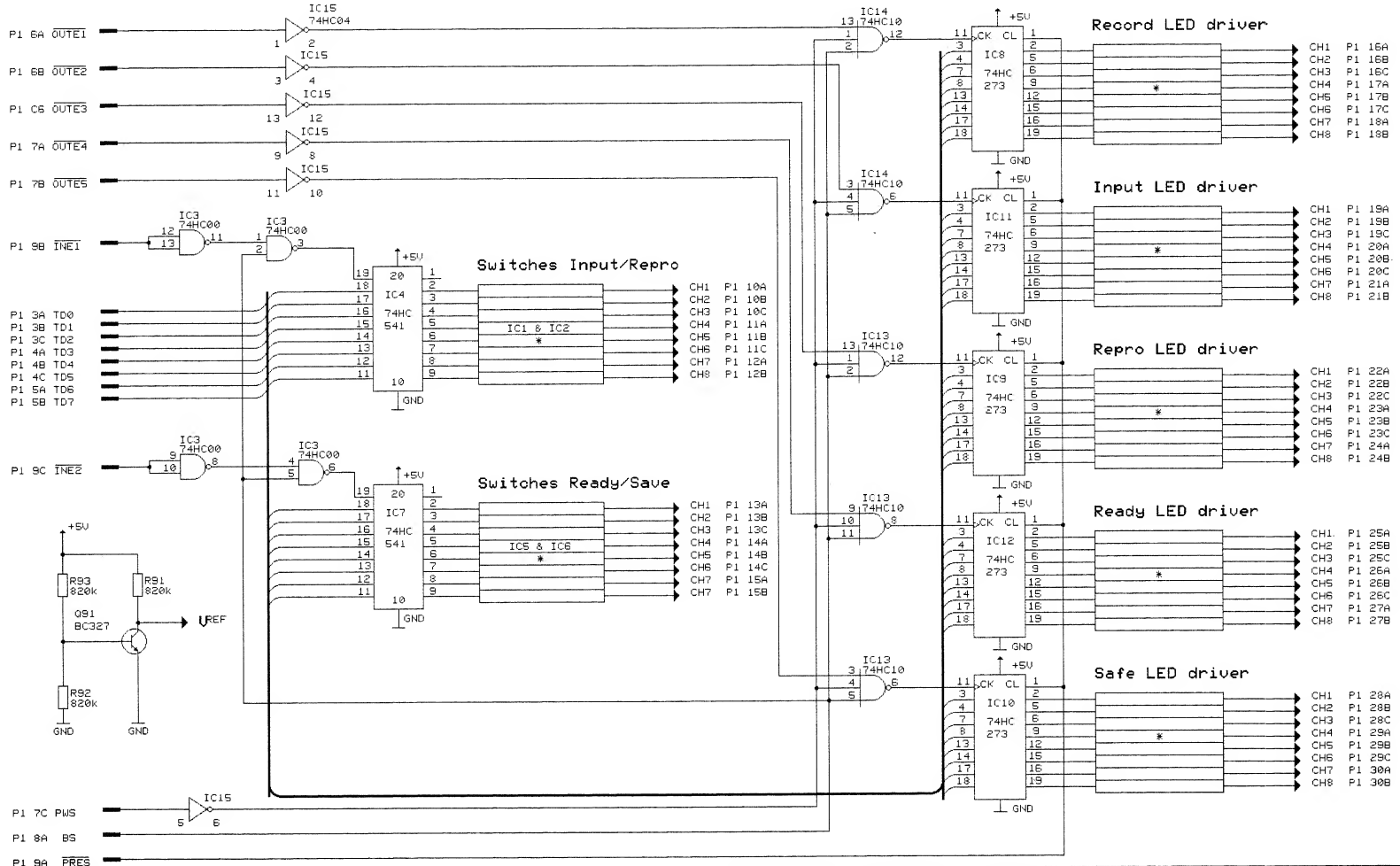

PAI IN/OUT 1.328.632.00

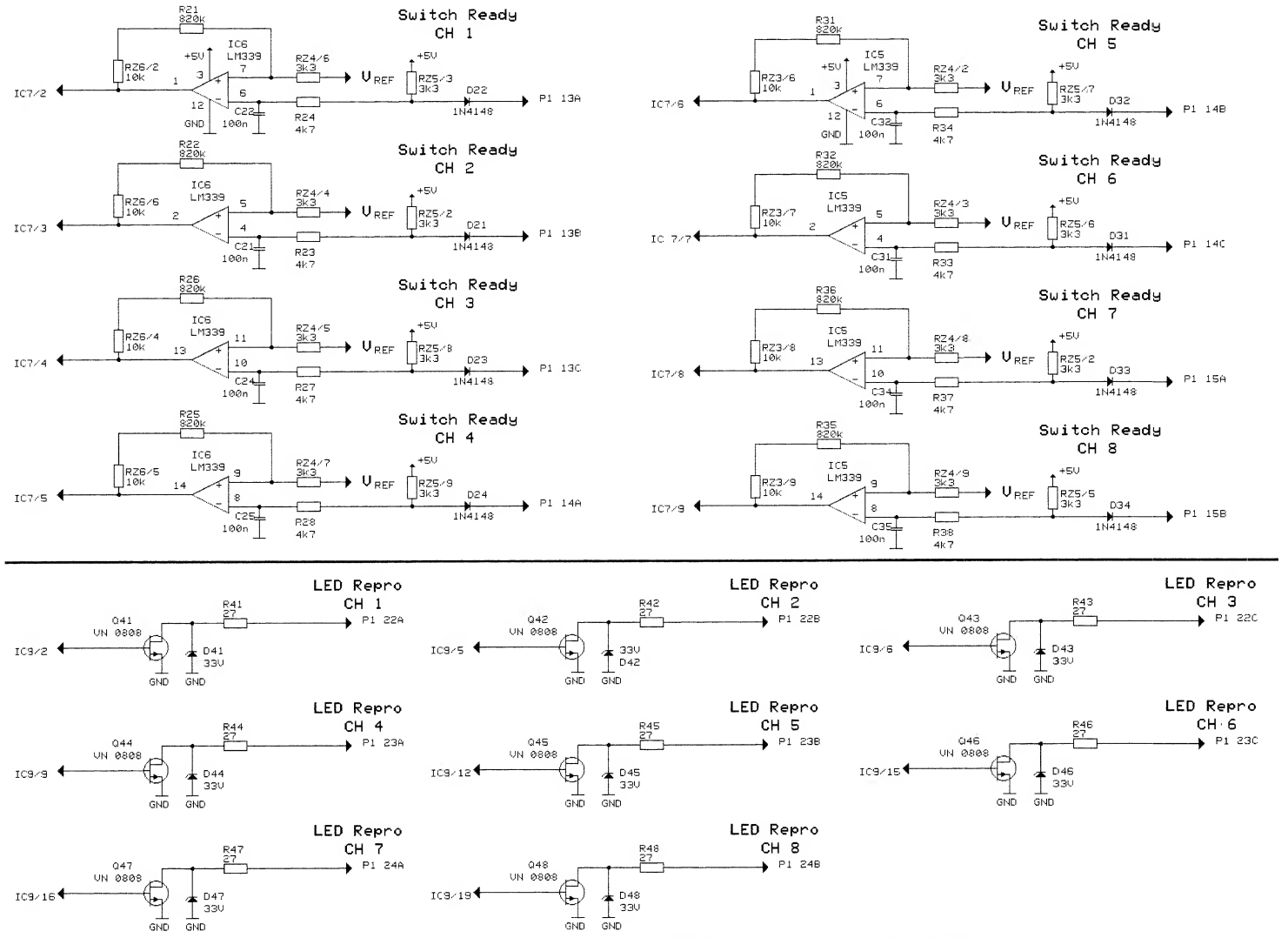

PAI IN/OUT 1.328.632.00

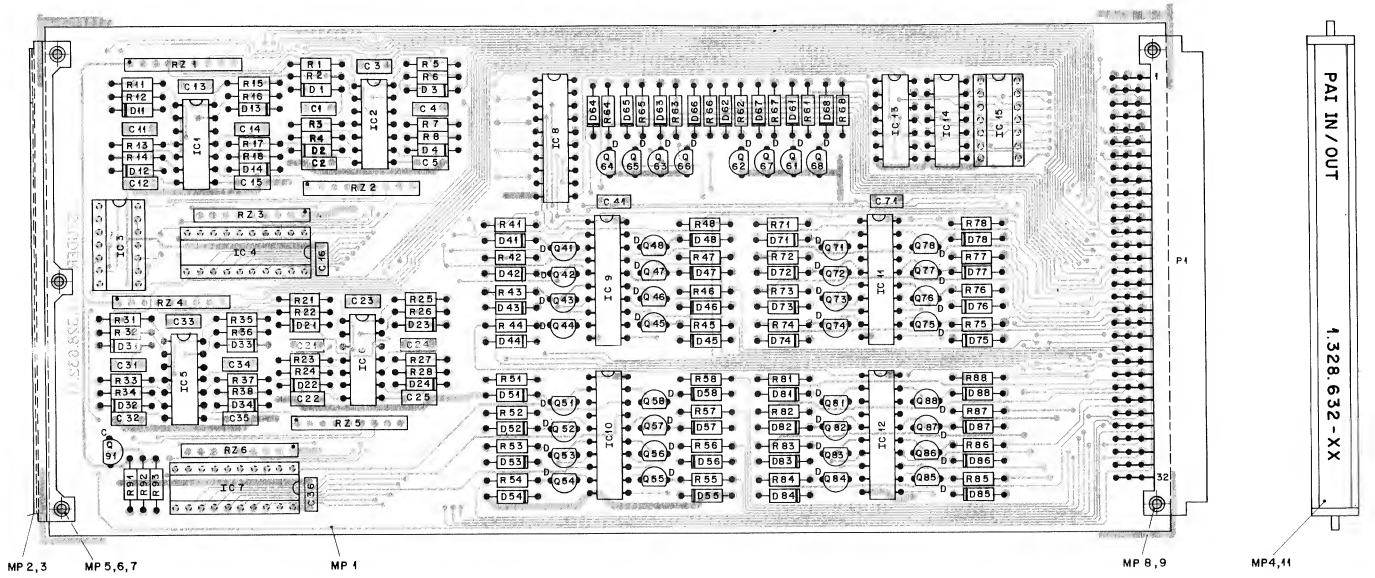

IND.	POS.NO.	PART NO.	VALUE	SPECIFICATIONS / EQUIVALENT	MANUF.
	C..0001	59.06.0104	.1 u	10%, 63V , PETP	ANY
	C..0002	59.06.0104	.1 u	10%, 63V , PETP	ANY
	C..0003	59.06.0683	.068 u	10%, 63V , PETP	ANY
	C..0004	59.06.0104	.1 u	10%, 63V , PETP	ANY
	C..0005	59.06.0104	.1 u	10%, 63V , PETP	ANY
	C..0011	59.06.0104	.1 u	10%, 63V , PETP	ANY
	C..0012	59.06.0104	.1 u	10%, 63V , PETP	ANY
	C..0013	59.06.0683	.068 u	10%, 63V , PETP	ANY
	C..0014	59.06.0104	.1 u	10%, 63V , PETP	ANY
	C..0015	59.06.0104	.1 u	10%, 63V , PETP	ANY
	C..0016	59.06.0683	.068 u	10%, 63V , PETP	ANY
	C..0021	59.06.0104	.1 u	10%, 63V , PETP	ANY
	C..0022	59.06.0104	.1 u	10%, 63V , PETP	ANY
	C..0023	59.06.0683	.068 u	10%, 63V , PETP	ANY
	C..0024	59.06.0104	.1 u	10%, 63V , PETP	ANY
	C..0025	59.06.0104	.1 u	10%, 63V , PETP	ANY
	C..0031	59.06.0104	.1 u	10%, 63V , PETP	ANY
	C..0032	59.06.0104	.1 u	10%, 63V , PETP	ANY
	C..0033	59.06.0683	.068 u	10%, 63V , PETP	ANY
	C..0034	59.06.0104	.1 u	10%, 63V , PETP	ANY
	C..0035	59.06.0104	.1 u	10%, 63V , PETP	ANY
	C..0036	59.06.0683	.068 u	10%, 63V , PETP	ANY
	C..0041	59.06.0683	.068 u	10%, 63V , PETP	ANY
	C..0071	59.06.0683	.068 u	10%, 63V , PETP	ANY
	D..0001	50.04.0125	1N 4448		SI
	D..0002	50.04.0125	1N 4448		SI
	D..0003	50.04.0125	1N 4448		SI
	D..0004	50.04.0125	1N 4448		SI
	D..0011	50.04.0125	1N 4448		SI
	D..0012	50.04.0125	1N 4448		SI
	D..0013	50.04.0125	1N 4448		SI
	D..0014	50.04.0125	1N 4448		SI
	D..0021	50.04.0125	1N 4448		SI
	D..0022	50.04.0125	1N 4448		SI
	D..0023	50.04.0125	1N 4448		SI
	D..0024	50.04.0125	1N 4448		SI

IND.	POS.NO.	PART NO.	VALUE	SPECIFICATIONS / EQUIVALENT	MANUF.
	D..0031	50.04.0125	1N 4448		SI
	D..0032	50.04.0125	1N 4448		SI
	D..0033	50.04.0125	1N 4448		SI
	D..0034	50.04.0125	1N 4448		SI
	D..0041	50.04.1127	33 V	5%, .40W, Z,	ANY
	D..0042	50.04.1127	33 V	5%, .40W, Z,	ANY
	D..0043	50.04.1127	33 V	5%, .40W, Z,	ANY
	D..0044	50.04.1127	33 V	5%, .40W, Z,	ANY
	D..0045	50.04.1127	33 V	5%, .40W, Z,	ANY
	D..0046	50.04.1127	33 V	5%, .40W, Z,	ANY
	D..0047	50.04.1127	33 V	5%, .40W, Z,	ANY
	D..0048	50.04.1127	33 V	5%, .40W, Z,	ANY
	D..0051	50.04.1127	33 V	5%, .40W, Z,	ANY
	D..0052	50.04.1127	33 V	5%, .40W, Z,	ANY
	D..0053	50.04.1127	33 V	5%, .40W, Z,	ANY
	D..0054	50.04.1127	33 V	5%, .40W, Z,	ANY
	D..0055	50.04.1127	33 V	5%, .40W, Z,	ANY
	D..0056	50.04.1127	33 V	5%, .40W, Z,	ANY
	D..0057	50.04.1127	33 V	5%, .40W, Z,	ANY
	D..0058	50.04.1127	33 V	5%, .40W, Z,	ANY
	D..0061	50.04.1127	33 V	5%, .40W, Z,	ANY
	D..0062	50.04.1127	33 V	5%, .40W, Z,	ANY
	D..0063	50.04.1127	33 V	5%, .40W, Z,	ANY
	D..0064	50.04.1127	33 V	5%, .40W, Z,	ANY
	D..0065	50.04.1127	33 V	5%, .40W, Z,	ANY
	D..0066	50.04.1127	33 V	5%, .40W, Z,	ANY
	D..0067	50.04.1127	33 V	5%, .40W, Z,	ANY
	D..0068	50.04.1127	33 V	5%, .40W, Z,	ANY
	D..0071	50.04.1127	33 V	5%, .40W, Z,	ANY
	D..0072	50.04.1127	33 V	5%, .40W, Z,	ANY
	D..0073	50.04.1127	33 V	5%, .40W, Z,	ANY
	D..0074	50.04.1127	33 V	5%, .40W, Z,	ANY
	D..0075	50.04.1127	33 V	5%, .40W, Z,	ANY
	D..0076	50.04.1127	33 V	5%, .40W, Z,	ANY
	D..0077	50.04.1127	33 V	5%, .40W, Z,	ANY
	D..0078	50.04.1127	33 V	5%, .40W, Z,	ANY
	D..0081	50.04.1127	33 V	5%, .40W, Z,	ANY

IND.	POS.NO.	PART NO.	VALUE	SPECIFICATIONS / EQUIVALENT	MANUF.
	D..0082	50.04.1127	33 V	5%, .40W, Z,	ANY
	D..0083	50.04.1127	33 V	5%, .40W, Z,	ANY
	D..0084	50.04.1127	33 V	5%, .40W, Z,	ANY
	D..0085	50.04.1127	33 V	5%, .40W, Z,	ANY
	D..0086	50.04.1127	33 V	5%, .40W, Z,	ANY
	D..0087	50.04.1127	33 V	5%, .40W, Z,	ANY
	D..0088	50.04.1127	33 V	5%, .40W, Z,	ANY
	IC.0001	50.11.0104		LM 339 N ,A	ANY
	IC.0002	50.11.0104		LM 339 N ,A	ANY
	IC.0003	50.17.1000		... 74 HC 00 .,A	ANY
	IC.0004	50.17.1541		... 74 HC 541 .,A	ANY
	IC.0005	50.11.0104		LM 339 N ,A	ANY
	IC.0006	50.11.0104		LM 339 N ,A	ANY
	IC.0007	50.17.1541		... 74 HC 541 .,A	ANY
	IC.0008	50.17.1273		... 74 HC 273 .,A	ANY
	IC.0009	50.17.1273		... 74 HC 273 .,A	ANY
	IC.0010	50.17.1273		... 74 HC 273 .,A	ANY
	IC.0011	50.17.1273		... 74 HC 273 .,A	ANY
	IC.0012	50.17.1273		... 74 HC 273 .,A	ANY
	IC.0013	50.17.1010		... 74 HC 10 .,A	ANY
	IC.0014	50.17.1010		... 74 HC 10 .,A	ANY
	IC.0015	50.17.1004		... 74 HC 04 .,A	ANY
	MP.0001	1.328.632.11		PAI I/O PCB	St
	MP.0002	1.010.006.33		GRIFFHAELFTE	St
	MP.0003	1.010.006.33		GRIFFHAELFTE	St
	MP.0004	1.010.096.41		KLASSICHTSCHILD	St
	MP.0005	28.21.1370		SCHRAUBE	ANY
	MP.0006	28.21.1370		SCHRAUBE	ANY
	MP.0007	28.21.1370		SCHRAUBE	ANY
	MP.0008	28.99.0119		SCHRAUBE	ANY
	MP.0009	28.99.0119		SCHRAUBE	ANY
	MP.0010	43.01.0108		ESE-WARNSCHILD	ANY
	MP.0011	1.328.632.01		BEZEICHNUNGSSTREIFEN PAI I/O-BOARD	St
	P..0001	54.01.0358		LEISTE 3 x 3, LOETPRINT	ANY

IND.	POS.NO.	PART NO.	VALUE	SPECIFICATIONS / EQUIVALENT	MANUF.
	Q..0041	50.03.1505	VN 0808 M	ZVN 010B A, ,A	ANY
	Q..0042	50.03.1505	VN 0808 M	ZVN 010B A, ,A	ANY
	Q..0043	50.03.1505	VN 0808 M	ZVN 010B A, ,A	ANY
	Q..0044	50.03.1505	VN 0808 M	ZVN 010B A, ,A	ANY
	Q..0045	50.03.1505	VN 0808 M	ZVN 010B A, ,A	ANY
	Q..0046	50.03.1505	VN 0808 M	ZVN 010B A, ,A	ANY
	Q..0047	50.03.1505	VN 0808 M	ZVN 010B A, ,A	ANY
	Q..0048	50.03.1505	VN 0808 M	ZVN 010B A, ,A	ANY
	Q..0051	50.03.1505	VN 0808 M	ZVN 010B A, ,A	ANY
	Q..0052	50.03.1505	VN 0808 M	ZVN 010B A, ,A	ANY
	Q..0053	50.03.1505	VN 0808 M	ZVN 010B A, ,A	ANY
	Q..0054	50.03.1505	VN 0808 M	ZVN 010B A, ,A	ANY
	Q..0055	50.03.1505	VN 0808 M	ZVN 010B A, ,A	ANY
	Q..0056	50.03.1505	VN 0808 M	ZVN 010B A, ,A	ANY
	Q..0057	50.03.1505	VN 0808 M	ZVN 010B A, ,A	ANY
	Q..0058	50.03.1505	VN 0808 M	ZVN 010B A, ,A	ANY
	Q..0061	50.03.1505	VN 0808 M	ZVN 010B A, ,A	ANY
	Q..0062	50.03.1505	VN 0808 M	ZVN 010B A, ,A	ANY
	Q..0063	50.03.1505	VN 0808 M	ZVN 010B A, ,A	ANY
	Q..0064	50.03.1505	VN 0808 M	ZVN 010B A, ,A	ANY
	Q..0065	50.03.1505	VN 0808 M	ZVN 010B A, ,A	ANY
	Q..0066	50.03.1505	VN 0808 M	ZVN 010B A, ,A	ANY
	Q..0067	50.03.1505	VN 0808 M	ZVN 010B A, ,A	ANY
	Q..0068	50.03.1505	VN 0808 M	ZVN 010B A, ,A	ANY
	Q..0071	50.03.1505	VN 0808 M	ZVN 010B A, ,A	ANY
	Q..0072	50.03.1505	VN 0808 M	ZVN 010B A, ,A	ANY
	Q..0073	50.03.1505	VN 0808 M	ZVN 010B A, ,A	ANY
	Q..0074	50.03.1505	VN 0808 M	ZVN 010B A, ,A	ANY
	Q..0075	50.03.1505	VN 0808 M	ZVN 010B A, ,A	ANY
	Q..0076	50.03.1505	VN 0808 M	ZVN 010B A, ,A	ANY
	Q..0077	50.03.1505	VN 0808 M	ZVN 010B A, ,A	ANY
	Q..0078	50.03.1505	VN 0808 M	ZVN 010B A, ,A	ANY
	Q..0081	50.03.1505	VN 0808 M	ZVN 010B A, ,A	ANY
	Q..0082	50.03.1505	VN 0808 M	ZVN 010B A, ,A	ANY
	Q..0083	50.03.1505	VN 0808 M	ZVN 010B A, ,A	ANY
	Q..0084	50.03.1505	VN 0808 M	ZVN 010B A, ,A	ANY
	Q..0085	50.03.1505	VN 0808 M	ZVN 010B A, ,A	ANY
	Q..0086	50.03.1505	VN 0808 M	ZVN 010B A, ,A	ANY
	Q..0087	50.03.1505	VN 0808 M	ZVN 010B A, ,A	ANY
	Q..0088	50.03.1505	VN 0808 M	ZVN 010B A, ,A	ANY
	Q..0091	50.03.0351	BC 327-25		ANY
	R..0001	57.11.3824	820 K	1%, 0207 , MF	ANY
	R..0002	57.11.3824	820 K	1%, 0207 , MF	ANY
	R..0003	57.11.3472	4.7 K	1%, 0207 , MF	ANY
	R..0004	57.11.3472	4.7 K	1%, 0207 , MF	ANY
	R..0005	57.11.3824	820 K	1%, 0207 , MF	ANY
	R..0006	57.11.3824	820 K	1%, 0207 , MF	ANY
	R..0007	57.11.3472	4.7 K	1%, 0207 , MF	ANY
	R..0008	57.11.3472	4.7 K	1%, 0207 , MF	ANY
	R..0011	57.11.3824	820 K	1%, 0207 , MF	ANY
	R..0012	57.11.3824	820 K	1%, 0207 , MF	ANY
	R..0013	57.11.3472	4.7 K	1%, 0207 , MF	ANY
	R..0014	57.11.3472	4.7 K	1%, 0207 , MF	ANY
	R..0015	57.11.3824	820 K	1%, 0207 , MF	ANY
	R..0016	57.11.3824	820 K	1%, 0207 , MF	ANY
	R..0017	57.11.3472	4.7 K	1%, 0207 , MF	ANY
	R..0018	57.11.3472	4.7 K	1%, 0207 , MF	ANY
	R..0021	57.11.3824	820 K	1%, 0207 , MF	ANY
	R..0022	57.11.3824	820 K	1%, 0207 , MF	ANY
	R..0023	57.11.3472	4.7 K	1%, 0207 , MF	ANY
	R..0024	57.11.3472	4.7 K	1%, 0207 , MF	ANY
	R..0025	57.11.3824	820 K	1%, 0207 , MF	ANY
	R..0026	57.11.3824	820 K	1%, 0207 , MF	ANY
	R..0027	57.11.3472	4.7 K	1%, 0207 , MF	ANY
	R..0028	57.11.3472	4.7 K	1%, 0207 , MF	ANY
	R..0031	57.11.3824	820 K	1%, 0207 , MF	ANY
	R..0032	57.11.3824	820 K	1%, 0207 , MF	ANY
	R..0033	57.11.3472	4.7 K	1%, 0207 , MF	ANY
	R..0034	57.11.3472	4.7 K	1%, 0207 , MF	ANY
	R..0035	57.11.3824	820 K	1%, 0207 , MF	ANY
	R..0036	57.11.3824	820 K	1%, 0207 , MF	ANY
	R..0037	57.11.3472	4.7 K	1%, 0207 , MF	ANY
	R..0038	57.11.3472	4.7 K	1%, 0207 , MF	ANY
	R..0041	57.11.3270	27	1%, 0207 , MF	ANY
	R..0042	57.11.3270	27	1%, 0207 , MF	ANY
	R..0043	57.11.3270	27	1%, 0207 , MF	ANY
	R..0044	57.11.3270	27	1%, 0207 , MF	ANY
	R..0045	57.11.3270	27	1%, 0207 , MF	ANY
	R..0046	57.11.3270	27	1%, 0207 , MF	ANY
	R..0047	57.11.3270	27	1%, 0207 , MF	ANY
	R..0048	57.11.3270	27	1%, 0207 , MF	ANY
	R..0051	57.11.3270	27	1%, 0207 , MF	ANY
	R..0052	57.11.3270	27	1%, 0207 , MF	ANY
	R..0053	57.11.3270	27	1%, 0207 , MF	ANY
	R..0054	57.11.3270	27	1%, 0207 , MF	ANY
	R..0055	57.11.3270	27	1%, 0207 , MF	ANY
	R..0056	57.11.3270	27	1%, 0207 , MF	ANY
	R..0057	57.11.3270	27	1%, 0207 , MF	ANY
	R..0058	57.11.3270	27	1%, 0207 , MF	ANY
	R..0061	57.11.3270	27	1%, 0207 , MF	ANY
	R..0062	57.11.3270	27	1%, 0207 , MF	ANY
	R..0063	57.11.3270	27	1%, 0207 , MF	ANY
	R..0064	57.11.3270	27	1%, 0207 , MF	ANY
	R..0065	57.11.3270	27	1%, 0207 , MF	ANY
	R..0066	57.11.3270	27	1%, 0207 , MF	ANY
	R..0067	57.11.3270	27	1%, 0207 , MF	ANY
	R..0068	57.11.3270	27	1%, 0207 , MF	ANY
	R..0071	57.11.3270	27	1%, 0207 , MF	ANY
	R..0072	57.11.3270	27	1%, 0207 , MF	ANY
	R..0073	57.11.3270	27	1%, 0207 , MF	ANY
	R..0074	57.11.3270	27	1%, 0207 , MF	ANY
	R..0075	57.11.3270	27	1%, 0207 , MF	ANY
	R..0076	57.11.3270	27	1%, 0207 , MF	ANY
	R..0077	57.11.3270	27	1%, 0207 , MF	ANY
	R..0078	57.11.3270	27	1%, 0207 , MF	ANY
	R..0081	57.11.3270	27	1%, 0207 , MF	ANY
	R..0082	57.11.3270	27	1%, 0207 , MF	ANY
	R..0083	57.11.3270	27	1%, 0207 , MF	ANY
	R..0084	57.11.3270	27	1%, 0207 , MF	ANY
	R..0085	57.11.3270	27	1%, 0207 , MF	ANY
	R..0086	57.11.3270	27	1%, 0207 , MF	ANY
	R..0087	57.11.3270	27	1%, 0207 , MF	ANY
	R..0088	57.11.3270	27	1%, 0207 , MF	ANY
	R..0091	57.11.3821	820	1%, 0207 , MF	ANY
	R..0092	57.11.3152	1.5 K	1%, 0207 , MF	ANY
	R..0093	57.11.3152	1.5 K	1%, 0207 , MF	ANY
	RZ.0001	57.88.4332		8 x 3.3 K, 2%, SIP 9	ANY
	RZ.0002	57.88.4332		8 x 3.3 K, 2%, SIP 9	ANY
	RZ.0003	57.88.4103		8 x 10 K, 2%, SIP 9	ANY
	RZ.0004	57.88.4332		8 x 3.3 K, 2%, SIP 9	ANY
	RZ.0005	57.88.4332		8 x 3.3 K, 2%, SIP 9	ANY
	RZ.0006	57.88.4103		8 x 10 K, 2%, SIP 9	ANY
	XIC0003	53.03.0167		XIC DIL 14-PCL, LOET	ANY
	XIC0004	53.03.0165		XIC DIL 20-PCL, LOET	ANY
	XIC0007	53.03.0165		XIC DIL 20-PCL, LOET	ANY
	XIC0015	53.03.0167		XIC DIL 14-PCL, LOET	ANY

REMARKS: BAUGRUPPEN-FREIGABE 21.11.89

MANUFACTUERS:
St = STUDER Ph = PHILIPS

ABBREVIATIONS:
CER = CERAMIC / FILM = FILM TYPE / XF = CLAMP FOR FUSES /
XIC = IC SOCKET

ORIG 89/11/21

VOLTAGE CONVERTER 60V/5V 1.328.633.00

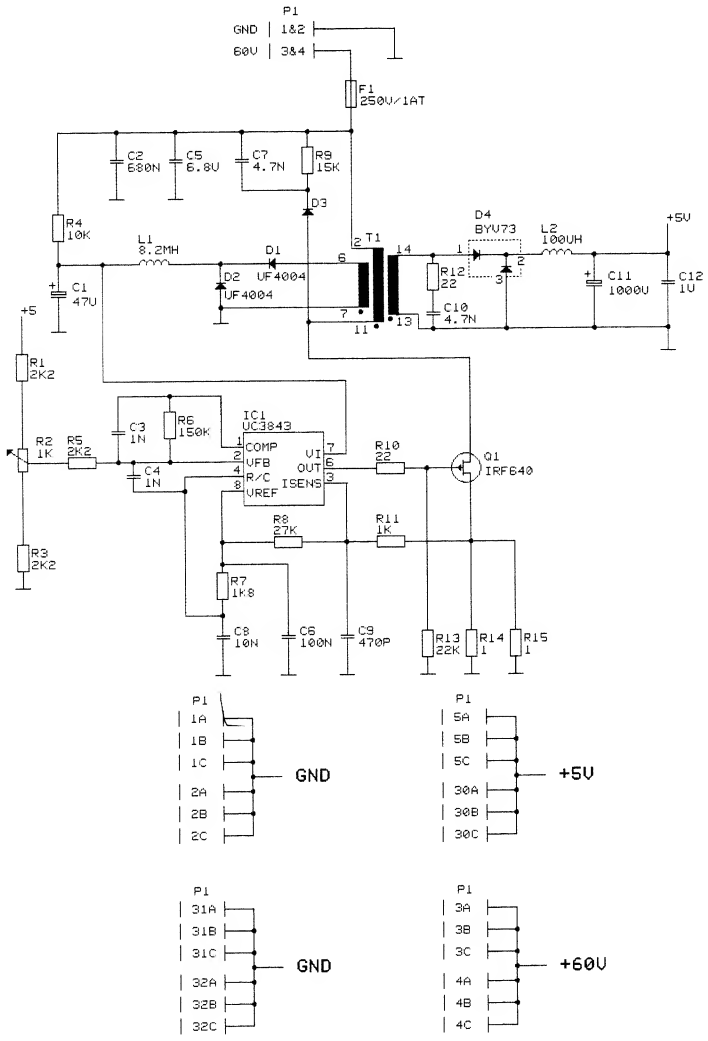

© 6.9.90 RA			
	PARALLEL - I/O (5V Converter)		PAGE 1 OF 1
STUDER	PAI 5V CONVERTER	SC	1.328.633-00

VOLTAGE CONVERTER 60V/5V 1.328.633.00

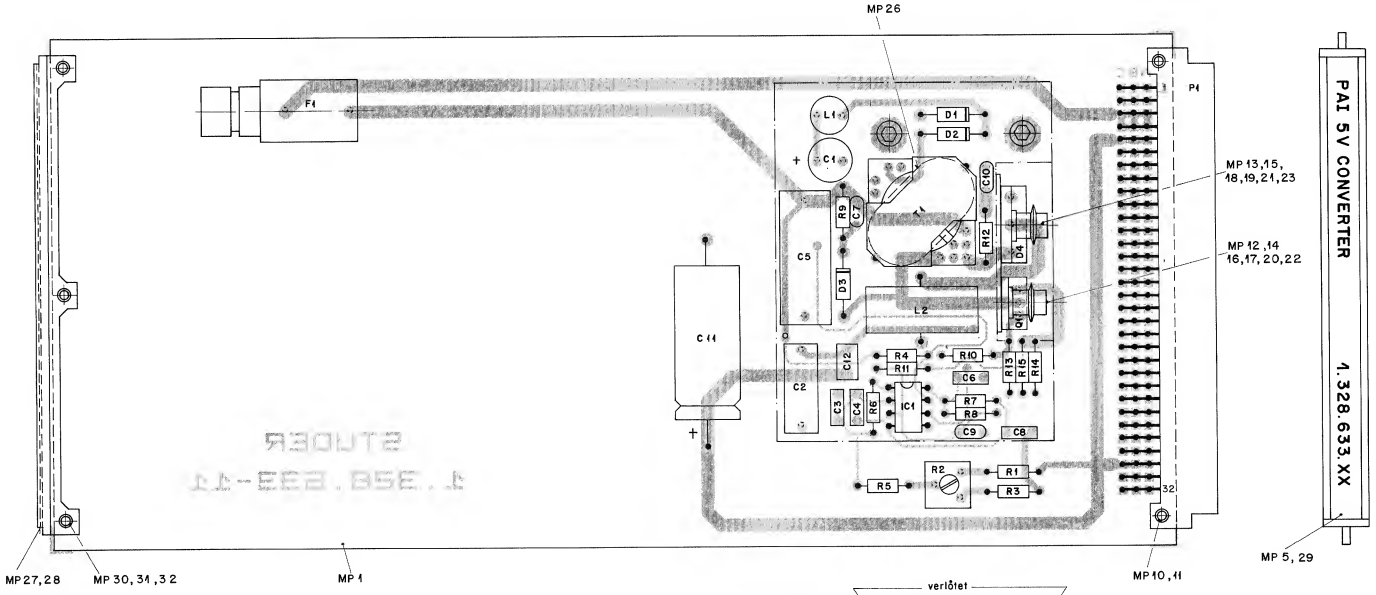

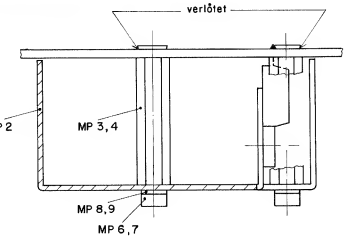

IND.	POS.NO.	PART NO.	VALUE	SPECIFICATIONS / EQUIVALENT	MANUF.
	C.....1	59.22.4470	47 u	-20%, 16V , EL	ANY
	C.....2	59.02.2684	.68 u	5%, 100V , MPC	ANY
	C.....3	59.06.0102	1000 p	10%, 63V , PETP	ANY
	C.....4	59.06.0102	1000 p	10%, 63V , PETP	ANY
	C.....5	59.02.0685	6.8 u	5%, 63V , MPC	ANY
	C.....6	59.06.0104	.1 u	10%, 63V , PETP	ANY
	C.....7	59.32.2472	4700 p	10%, 50V , CER	ANY
	C.....8	59.06.0103	.01 u	10%, 63V , PETP	ANY
	C.....9	59.32.2471	470 p	10%, 50V , CER	ANY
	C....10	59.32.2472	4700 p	10%, 50V , CER	ANY
	C....11	59.25.3222	2200 u	-20%, 16V , EL	ANY
	C....12	59.06.0105	1.0 u	10%, 50V , PETP	ANY
	D.....1	50.04.0138		BYT 01-400, UF 4004	ANY
	D.....2	50.04.0138		BYT 01-400, UF 4004	ANY
	D.....3	50.04.0138		BYT 01-400, UF 4004	ANY
	D.....4	50.04.0520		MBR 3045 PT, BYV 73-45	ANY
	F.....1	51.01.0117		T1.0A / 250V, 5 * 20	ANY
	IC....1	50.10.0113		IP 3843 N	ANY
	L.....1	62.02.1822		8.2 mH , 5%, D 8	ANY
	L.....2	62.03.0040		100 uH , 5 A, FILTER	ANY
	MP....1	1.328.633.11		VOLTAGE CONVERTER 60V/5V PCB	St
	MP....2	1.862.812.02		ABSCHIRMHAUBE	St
	MP....3	1.010.022.22		NIETMUTTER SW 6 M 3 * 2S	ANY
	MP....4	1.010.022.22		NIETMUTTER SW 6 M 3 * 2S	ANY
	MP....5	1.328.633.01		NS.-ETIKETTE 5 * 20	St
	MP....6	21.51.8354		LIB-SCHR. IS , NI , M 3 * 6	ANY
	MP....7	21.51.8354		LIB-SCHR. IS , NI , M 3 * 6	ANY
(00)	MP....8	24.16.1030		RIPPENSCHEIBE D 3.2/5.5	ANY
(01)	MP....8	24.16.2030		FAECHERSCHEIBE D 3.2/5.5	ANY
(00)	MP....9	24.16.1030		RIPPENSCHEIBE D 3.2/5.5	ANY
(01)	MP....9	24.16.2030		FAECHERSCHEIBE D 3.2/5.5	ANY
	MP....10	28.99.0119		ROHRNIETE D 2.540.15* 10	ANY

IND.	POS.NO.	PART NO.	VALUE	SPECIFICATIONS / EQUIVALENT	MANUF.
	MP...11	28.99.0119		ROHRNIETE D 2.5*0.15* 10	ANY
	MP...12	50.20.0305		TO 220 GLIMMERSCHEIBE GEFETTET	ANY
	MP...13	50.20.0317		TO 218 GLIMMERSCHEIBE	ANY
	MP...14	50.20.0404		ISOLIERDURCHFUEHRUNG,D 6.0/3.5	ANY
	MP...15	50.20.0404		ISOLIERDURCHFUEHRUNG,D 6.0/3.5	ANY
	MP...16	37.01.0101		TELLERFEDER D 3.2/ 8 * 0.3	ANY
	MP...17	37.01.0101		TELLERFEDER D 3.2/ 8 * 0.3	ANY
	MP...18	37.01.0101		TELLERFEDER D 3.2/ 8 * 0.3	ANY
	MP...19	37.01.0101		TELLERFEDER D 3.2/ 8 * 0.3	ANY
	MP...20	1.010.098.27		DISTANZHUELSE ZU TO 220	ANY
	MP...21	1.010.098.27		DISTANZHUELSE ZU TO 220	ANY
	MP...22	21.53.0356		Z - SCHR. IS, ZN , M 3 * 10	ANY
	MP...23	21.53.0356		Z - SCHR. IS, ZN , M 3 * 10	ANY
	MP...24	43.01.0108		ESX-WARNSCHILD	St
	MP...25	1.010.115.51		TEXT-STIK. 5420 (T1.00A)	St
	MP...26	1.010.002.61		UNTERLAGE ZU SWITCHING TRAFO	St
	MP...27	1.010.006.33		GRIFFHALFTE	St
	MP...28	1.010.006.33		GRIFFHALFTE	St
	MP...29	1.010.096.49		KLASSICHTSCHILD	ANY
	MP...30	28.21.1370		ROHRNIETE, D2.25* 5.5	ANY
	MP...31	28.21.1370		ROHRNIETE, D2.25* 5.5	ANY
	MP...32	28.21.1370		ROHRNIETE, D2.25* 5.5	ANY
	P.....1	54.01.0358		LEISTE 3 * 32 EURO PRINT	ANY
	Q.....1	50.03.1510		IRF 640 ,A	ANY
	R.....1	57.11.3222	2.2 k	1%, 0207 , MF	ANY
	R.....2	58.01.8102	1 k	10%, .5 W , PMS	ANY
	R.....3	57.11.3222	2.2 k	1%, 0207 , MF	ANY
	R.....4	57.11.3103	10 k	1%, 0207 , MF	ANY
	R.....5	57.11.3222	2.2 k	1%, 0207 , MF	ANY
	R.....6	57.11.3154	150 k	1%, 0207 , MF	ANY
	R.....7	57.11.3182	1.8 k	1%, 0207 , MF	ANY
	R.....8	57.11.3273	27 k	1%, 0207 , MF	ANY
	R.....9	57.11.3153	15 k	1%, 0207 , MF	ANY
	R....10	57.11.3220	22 E	1%, 0207 , MF	ANY

IND.	POS.NO.	PART NO.	VALUE	SPECIFICATIONS / EQUIVALENT	MANUF.
	R....11	57.11.3102	1 k	1%, 0207 , MF	ANY
	R....12	57.11.3220	22 E	1%, 0207 , MF	ANY
	R....13	57.11.3223	22 k	1%, 0207 , MF	ANY
	R....14	57.11.3109	1.0 E	1%, 0207 , MF	ANY
	R....15	57.11.3109	1.0 E	1%, 0207 , MF	ANY
	T.....1	1.022.628.00		SWITCHING TRANSFORMER	St
	XF....1	53.03.0118	5 * 20	PRINT-LIEGEND	ANY

```
*************************************************
***      FREIGABEVERSION    14.8.89          ***
*************************************************
```

REMARKS:
INDEX 01: Faecherscheibe statt Rippenscheibe

MANUFACTURERS:
St = STUDER / Ph = PHILIPS / So = SONY

ABBREVIATIONS:
CER = CERAMIC / FILM = FILM TYPE / XF = CLAMP FOR FUSES /
XIC = IC SOCKET

ORIG 90/01/05 (01) 90/02/13

PAI BACKPANEL 1.328.634.00

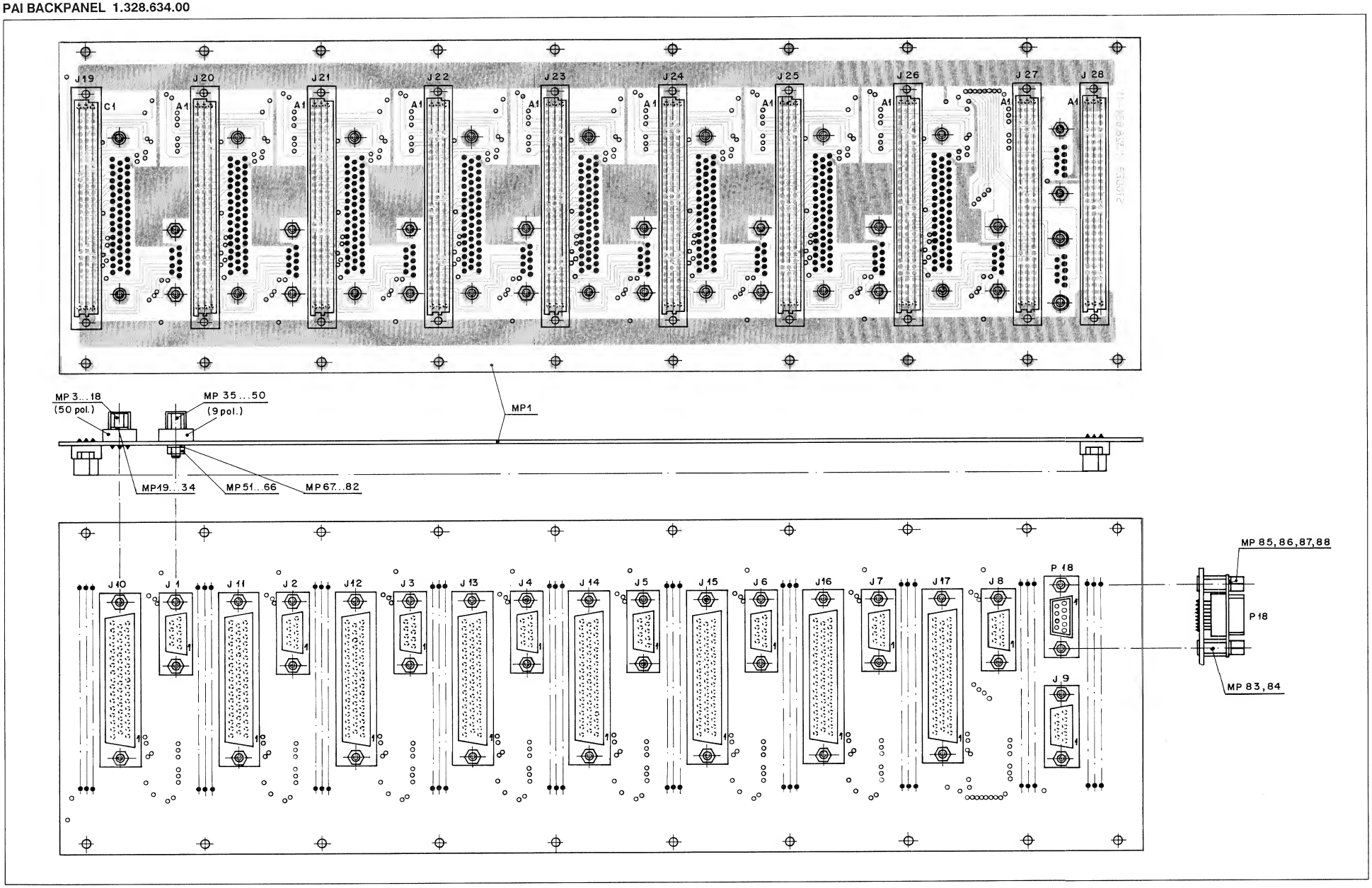

PAI BACKPANEL 1.328.634.00

IND.	POS.NO.	PART NO.	VALUE	SPECIFICATIONS / EQUIVALENT	MANUF.
	J.....1	54.13.0041	D-TYPE	9 POL.PRINT, ACTION PIN	AMP
	J.....2	54.13.0041	D-TYPE	9 POL.PRINT, ACTION PIN	AMP
	J.....3	54.13.0041	D-TYPE	9 POL.PRINT, ACTION PIN	AMP
	J.....4	54.13.0041	D-TYPE	9 POL.PRINT, ACTION PIN	AMP
	J.....5	54.13.0041	D-TYPE	9 POL.PRINT, ACTION PIN	AMP
	J.....6	54.13.0041	D-TYPE	9 POL.PRINT, ACTION PIN	AMP
	J.....7	54.13.0041	D-TYPE	9 POL.PRINT, ACTION PIN	AMP
	J.....8	54.13.0041	D-TYPE	9 POL.PRINT, ACTION PIN	AMP
	J.....9	54.13.0041	D-TYPE	9 POL.PRINT, ACTION PIN	AMP
	J....10	54.13.0045	D-TYPE	50 POL.PRINT, ACTION PIN	AMP
	J....11	54.13.0045	D-TYPE	50 POL.PRINT, ACTION PIN	AMP
	J....12	54.13.0045	D-TYPE	50 POL.PRINT, ACTION PIN	AMP
	J....13	54.13.0045	D-TYPE	50 POL.PRINT, ACTION PIN	AMP
	J....14	54.13.0045	D-TYPE	50 POL.PRINT, ACTION PIN	AMP
	J....15	54.13.0045	D-TYPE	50 POL.PRINT, ACTION PIN	AMP
	J....16	54.13.0045	D-TYPE	50 POL.PRINT, ACTION PIN	AMP
	J....17	54.13.0045	D-TYPE	50 POL.PRINT, ACTION PIN	AMP
	J....19	54.11.2011	EURO	3 x 32, TYP C, ACTION PIN	AMP
	J....20	54.11.2011	EURO	3 x 32, TYP C, ACTION PIN	AMP
	J....21	54.11.2011	EURO	3 x 32, TYP C, ACTION PIN	AMP
	J....22	54.11.2011	EURO	3 x 32, TYP C, ACTION PIN	AMP
	J....23	54.11.2011	EURO	3 x 32, TYP C, ACTION PIN	AMP
	J....24	54.11.2011	EURO	3 x 32, TYP C, ACTION PIN	AMP
	J....25	54.11.2011	EURO	3 x 32, TYP C, ACTION PIN	AMP
	J....26	54.11.2011	EURO	3 x 32, TYP C, ACTION PIN	AMP
	J....27	54.11.2011	EURO	3 x 32, TYP C, ACTION PIN	AMP
	J....28	54.11.2011	EURO	3 x 32, TYP C, ACTION PIN	AMP
	MP....1	1.328.634.11		PAI BACKPANEL PCB	St
	MP....2	1.328.634.01		NR-ETIKETTE 5 x 20	St
	MP....3	1.010.035.54		VERRIEGELUNGS-GEWINDEBOLZEN F. 50-POL.	St
	MP....4	1.010.035.54		VERRIEGELUNGS-GEWINDEBOLZEN F. 50-POL.	St
	MP....5	1.010.035.54		VERRIEGELUNGS-GEWINDEBOLZEN F. 50-POL.	St
	MP....6	1.010.035.54		VERRIEGELUNGS-GEWINDEBOLZEN F. 50-POL.	St
	MP....7	1.010.035.54		VERRIEGELUNGS-GEWINDEBOLZEN F. 50-POL.	St
	MP....8	1.010.035.54		VERRIEGELUNGS-GEWINDEBOLZEN F. 50-POL.	St
	MP....9	1.010.035.54		VERRIEGELUNGS-GEWINDEBOLZEN F. 50-POL.	St

S T U D E R (00) 89/12/20 RU PAI BACKPANEL PL 1.328.634.00 PAGE 1

IND.	POS.NO.	PART NO.	VALUE	SPECIFICATIONS / EQUIVALENT	MANUF.
	MP...10	1.010.035.54		VERRIEGELUNGS-GEWINDEBOLZEN F. 50-POL.	St
	MP...11	1.010.035.54		VERRIEGELUNGS-GEWINDEBOLZEN F. 50-POL.	St
	MP...12	1.010.035.54		VERRIEGELUNGS-GEWINDEBOLZEN F. 50-POL.	St
	MP...13	1.010.035.54		VERRIEGELUNGS-GEWINDEBOLZEN F. 50-POL.	St
	MP...14	1.010.035.54		VERRIEGELUNGS-GEWINDEBOLZEN F. 50-POL.	St
	MP...15	1.010.035.54		VERRIEGELUNGS-GEWINDEBOLZEN F. 50-POL.	St
	MP...16	1.010.035.54		VERRIEGELUNGS-GEWINDEBOLZEN F. 50-POL.	St
	MP...17	1.010.035.54		VERRIEGELUNGS-GEWINDEBOLZEN F. 50-POL.	St
	MP...18	1.010.035.54		VERRIEGELUNGS-GEWINDEBOLZEN F. 50-POL.	St
	MP...19	24.16.1030		SI-SCHEIBE	ANY
	MP...20	24.16.1030		SI-SCHEIBE	ANY
	MP...21	24.16.1030		SI-SCHEIBE	ANY
	MP...22	24.16.1030		SI-SCHEIBE	ANY
	MP...23	24.16.1030		SI-SCHEIBE	ANY
	MP...24	24.16.1030		SI-SCHEIBE	ANY
	MP...25	24.16.1030		SI-SCHEIBE	ANY
	MP...26	24.16.1030		SI-SCHEIBE	ANY
	MP...27	24.16.1030		SI-SCHEIBE	ANY
	MP...28	24.16.1030		SI-SCHEIBE	ANY
	MP...29	24.16.1030		SI-SCHEIBE	ANY
	MP...30	24.16.1030		SI-SCHEIBE	ANY
	MP...31	24.16.1030		SI-SCHEIBE	ANY
	MP...32	24.16.1030		SI-SCHEIBE	ANY
	MP...33	24.16.1030		SI-SCHEIBE	ANY
	MP...34	24.16.1030		SI-SCHEIBE	ANY
	MP...35	1.010.032.54		VERRIEGELUNGS-GEWINDEBOLZEN F. 9-POL.	St
	MP...36	1.010.032.54		VERRIEGELUNGS-GEWINDEBOLZEN F. 9-POL.	St
	MP...37	1.010.032.54		VERRIEGELUNGS-GEWINDEBOLZEN F. 9-POL.	St
	MP...38	1.010.032.54		VERRIEGELUNGS-GEWINDEBOLZEN F. 9-POL.	St
	MP...39	1.010.032.54		VERRIEGELUNGS-GEWINDEBOLZEN F. 9-POL.	St
	MP...40	1.010.032.54		VERRIEGELUNGS-GEWINDEBOLZEN F. 9-POL.	St
	MP...41	1.010.032.54		VERRIEGELUNGS-GEWINDEBOLZEN F. 9-POL.	St
	MP...42	1.010.032.54		VERRIEGELUNGS-GEWINDEBOLZEN F. 9-POL.	St
	MP...43	1.010.032.54		VERRIEGELUNGS-GEWINDEBOLZEN F. 9-POL.	St
	MP...44	1.010.032.54		VERRIEGELUNGS-GEWINDEBOLZEN F. 9-POL.	St
	MP...45	1.010.032.54		VERRIEGELUNGS-GEWINDEBOLZEN F. 9-POL.	St
	MP...46	1.010.032.54		VERRIEGELUNGS-GEWINDEBOLZEN F. 9-POL.	St

S T U D E R (00) 89/12/20 RU PAI BACKPANEL PL 1.328.634.00 PAGE 2

IND.	POS.NO.	PART NO.	VALUE	SPECIFICATIONS / EQUIVALENT	MANUF.
	MP...47	1.010.032.54		VERRIEGELUNGS-GEWINDEBOLZEN F. 9-POL.	St
	MP...48	1.010.032.54		VERRIEGELUNGS-GEWINDEBOLZEN F. 9-POL.	St
	MP...49	1.010.032.54		VERRIEGELUNGS-GEWINDEBOLZEN F. 9-POL.	St
	MP...50	1.010.032.54		VERRIEGELUNGS-GEWINDEBOLZEN F. 9-POL.	St
	MP...51	22.01.8030		MUTTER M3	ANY
	MP...52	22.01.8030		MUTTER M3	ANY
	MP...53	22.01.8030		MUTTER M3	ANY
	MP...54	22.01.8030		MUTTER M3	ANY
	MP...55	22.01.8030		MUTTER M3	ANY
	MP...56	22.01.8030		MUTTER M3	ANY
	MP...57	22.01.8030		MUTTER M3	ANY
	MP...58	22.01.8030		MUTTER M3	ANY
	MP...59	22.01.8030		MUTTER M3	ANY
	MP...60	22.01.8030		MUTTER M3	ANY
	MP...61	22.01.8030		MUTTER M3	ANY
	MP...62	22.01.8030		MUTTER M3	ANY
	MP...63	22.01.8030		MUTTER M3	ANY
	MP...64	22.01.8030		MUTTER M3	ANY
	MP...65	22.01.8030		MUTTER M3	ANY
	MP...66	22.01.8030		MUTTER M3	ANY
	MP...67	23.01.2032		U-SCHEIBE M3	ANY
	MP...68	23.01.2032		U-SCHEIBE M3	ANY
	MP...69	23.01.2032		U-SCHEIBE M3	ANY
	MP...70	23.01.2032		U-SCHEIBE M3	ANY
	MP...71	23.01.2032		U-SCHEIBE M3	ANY
	MP...72	23.01.2032		U-SCHEIBE M3	ANY
	MP...73	23.01.2032		U-SCHEIBE M3	ANY
	MP...74	23.01.2032		U-SCHEIBE M3	ANY
	MP...75	23.01.2032		U-SCHEIBE M3	ANY
	MP...76	23.01.2032		U-SCHEIBE M3	ANY
	MP...77	23.01.2032		U-SCHEIBE M3	ANY
	MP...78	23.01.2032		U-SCHEIBE M3	ANY
	MP...79	23.01.2032		U-SCHEIBE M3	ANY
	MP...80	23.01.2032		U-SCHEIBE M3	ANY
	MP...81	23.01.2032		U-SCHEIBE M3	ANY
	MP...82	23.01.2032		U-SCHEIBE M3	ANY
	MP...83	1.328.634.02		NIETMUTTER M3 x 5.7) PRINT 2.4 mm	St

S T U D E R (00) 89/12/20 RU PAI BACKPANEL PL 1.328.634.00 PAGE 3

IND.	POS.NO.	PART NO.	VALUE	SPECIFICATIONS / EQUIVALENT	MANUF.
	MP...84	1.328.634.02		NIETMUTTER M3 x 5.7) PRINT 2.4 mm	St
	MP...85	1.010.035.54		VERRIEGELUNGS-GEW'BOLZEN F. 9-POL. PRINT	St
	MP...86	1.010.035.54		VERRIEGELUNGS-GEW'BOLZEN F. 9-POL. PRINT	St
	MP...87	24.16.1030		SI-SCHEIBE	ANY
	MP...88	24.16.1030		SI-SCHEIBE	ANY
	P....18	54.13.0026		D-TYPE 9 POL. PRINT	AMP

REMARKS:

MANUFACTURERS:
St = STUDER / Ph = PHILIPS / So = SONY

ABBREVIATIONS:
CER = CERAMIC / FILM = FILM TYPE / XF = CLAMP FOR FUSES /
XIC = IC SOCKET

ORIG 89/12/20

S T U D E R (00) 89/12/20 RU PAI BACKPANEL PL 1.328.634.00 PAGE 4

REMBUS ABSCHLUSSSTECKER 1.862.423.00